TELETYPE model 28

THE LEADERSHIP LINE

BULLETIN 217B

ADJUSTMENTS AND LUBRICATION

MODEL 28
PAGE PRINTER SET

LP, LK, LB, LAC, LBAC, LPC

TELETYPE® CORPORATION
5555 TOUHY AVENUE, SKOKIE, ILLINOIS

TELETYPE model 28

THE LEADERSHIP LINE

BULLETIN 217B

ADJUSTMENTS AND LUBRICATION

MODEL 28
PAGE PRINTER SET

LP, LK, LB, LAC, LBAC, LPC

TELETYPE® CORPORATION
5555 TOUHY AVENUE, SKOKIE, ILLINOIS

© 1953 AND 1961 BY TELETYPE CORPORATION IN UNITED STATES.
COPYRIGHT IN ALL COUNTRIES PARTICIPATING IN INTERNATIONAL
CONVENTION AND PAN AMERICAN CONVENTIONS. ALL RIGHTS
RESERVED INCLUDING RIGHTS OF TRANSLATIONS INTO ALL LANGUAGES.

Printed in U. S. A.

LIST OF EFFECTIVE PAGES

MARCH, 1964
(SUPERSEDES AUGUST, 1963)

PAGE NUMBER	CHANGE IN EFFECT	PAGE NUMBER	CHANGE IN EFFECT	PAGE NUMBER	CHANGE IN EFFECT	PAGE NUMBER	CHANGE IN EFFECT
A to C	Change 6	1-69	Change 5	2-44A	Change 6	3-52/3-53	Change 4
D to E	Change 5	1-70	Change 4	2-45/2-46	Change 4	3-54	Change 5
F to R	Change 6	1-71	Change 6	2-47/2-49B	Change 6	3-55	Change 4
1-1 to 1-4	Change 5	1-72/1-74	Change 5	2-50/2-79	Change 5	3-55A/3-55F	Change 5
1-5	Change 4	1-75	Change 6	2-80/2-82	Change 6	3-56/3-58	Change 4
1-6	Change 6	1-76	Change 5	2-83/2-84	Change 7	3-59/3-60	Change 5
1-7	Change 5	1-77	Change 4			3-61	Change 6
1-8	Change 4	1-78/1-79	Change 5	3-1	Change 6	3-62/3-64	Change 4
1-9/1-11	Change 6	1-80/1-81	Change 6	3-2	Change 1	3-65/3-75	Change 5
1-12	Change 4	1-82	Change 5	3-2A/3-2B	Change 5		
1-13	Change 6	1-83/1-84	Change 4	3-3	Change 4	4-1/4-6	Change 4
1-14	Change 4	1-85	Change 6	3-3A	Change 6	4-7	Change 6
1-15	Change 5	1-86/1-91	Change 5	3-3B/3-3D	Change 5	4-8/4-13	Change 4
1-16	Change 4	1-92A/1-92F	Change 6	3-4	Change 4	4-13A/4-14	Change 5
1-17/1-18E	Change 6	1-93/1-94	Change 6	3-5	Change 1	4-15/4-17	Change 4
1-19/1-20	Change 5	1-95/1-96	Change 5	3-6/3-7	Change 5	4-18	Change 5
1-21/1-23	Change 6	1-97	Change 6	3-8	Change 6	4-19/4-20	Change 4
1-24	Change 4	1-98/1-104	Change 5	3-9/3-10	Change 5	4-21	Change 5
1-25	Change 5	1-105	Change 6	3-11	Change 1	4-22/4-23	Change 4
1-26	Change 6	1-106	Change 5	3-12	Change 2	4-24	Change 2
1-27/1-31	Change 5	1-107	Change 6	3-13	Change 5	4-25/4-27	Change 5
1-32	Change 4			3-14	Change 1	4-28	Change 4
1-33/1-35	Change 5	2-1	Change 5	3-15	Change 5	4-29/4-31	Change 5
1-36	Change 6	2-2	Change 4	3-16/3-17	Change 1	4-32	Change 4
1-37/1-39	Change 5	2-3	Change 5	3-18	Change 2	4-33	Change 5
1-40	Change 6	2-4/2-8	Change 4	3-19	Change 3	4-34/4-37	Change 4
1-41/1-42	Change 4	2-9	Change 6	3-20/3-21	Change 6	4-38/4-39	Change 5
1-43	Change 5	2-10	Change 4	3-22	Change 1	4-40	Change 4
1-44	Change 4	2-11/2-12	Change 6	3-23	Change 4	4-41	Change 5
1-45/1-46	Change 6	2-13	Change 4	3-24	Change 5	4-42/4-50	Change 4
1-47	Change 4	2-14/2-15	Change 6	3-25	Change 1		
1-48	Change 5	2-16	Change 4	3-26	Change 5		
1-49	Change 4	2-17/2-18	Change 5	3-27/3-28	Change 1		
1-50	Change 5	2-19/2-21	Change 4	3-29	Change 4		
1-51	Change 4	2-22	Change 5	3-30/3-31	Change 6		
1-52/1-53	Change 5	2-23/2-25	Change 4	3-32	Change 5		
1-54	Change 4	2-26	Change 6	3-33	Change 1		
1-55	Change 6	2-27/2-29	Change 5	3-34/3-35	Change 2		
1-56	Change 5	2-30/2-33	Change 4	3-36	Change 5		
1-57/1-58	Change 4	2-34	Change 6	3-37/3-39	Change 4		
1-59/1-61	Change 5	2-35/2-38	Change 4	3-40	Change 5		
1-62/1-65	Change 6	2-39/2-40	Change 5	3-41	Change 4		
1-66	Change 4	2-41/2-42	Change 4	3-42/3-46	Change 2		
1-67	Change 5	2-43	Change 5	3-47/3-50	Change 4		
1-68	Change 4	2-44	Change 6	3-51	Change 5		

The above list indicates the effective pages as of the date of Issue. Upon receipt of Change pages, insert them numerically and discard any superseded pages.

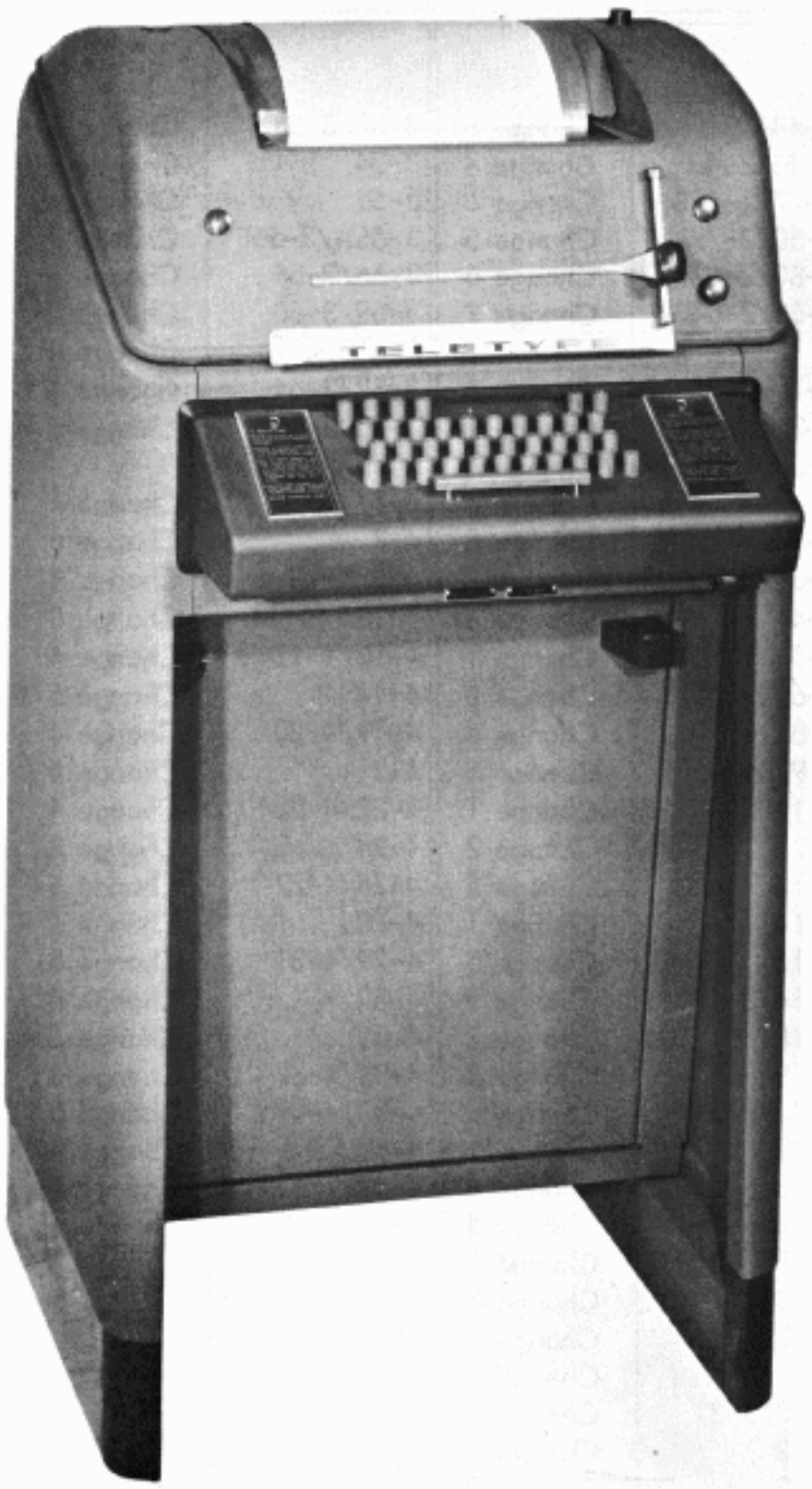

SEND-RECEIVE SET
(CONSOLE MOUNTED)

RECEIVE-ONLY SET
(CONSOLE MOUNTED)

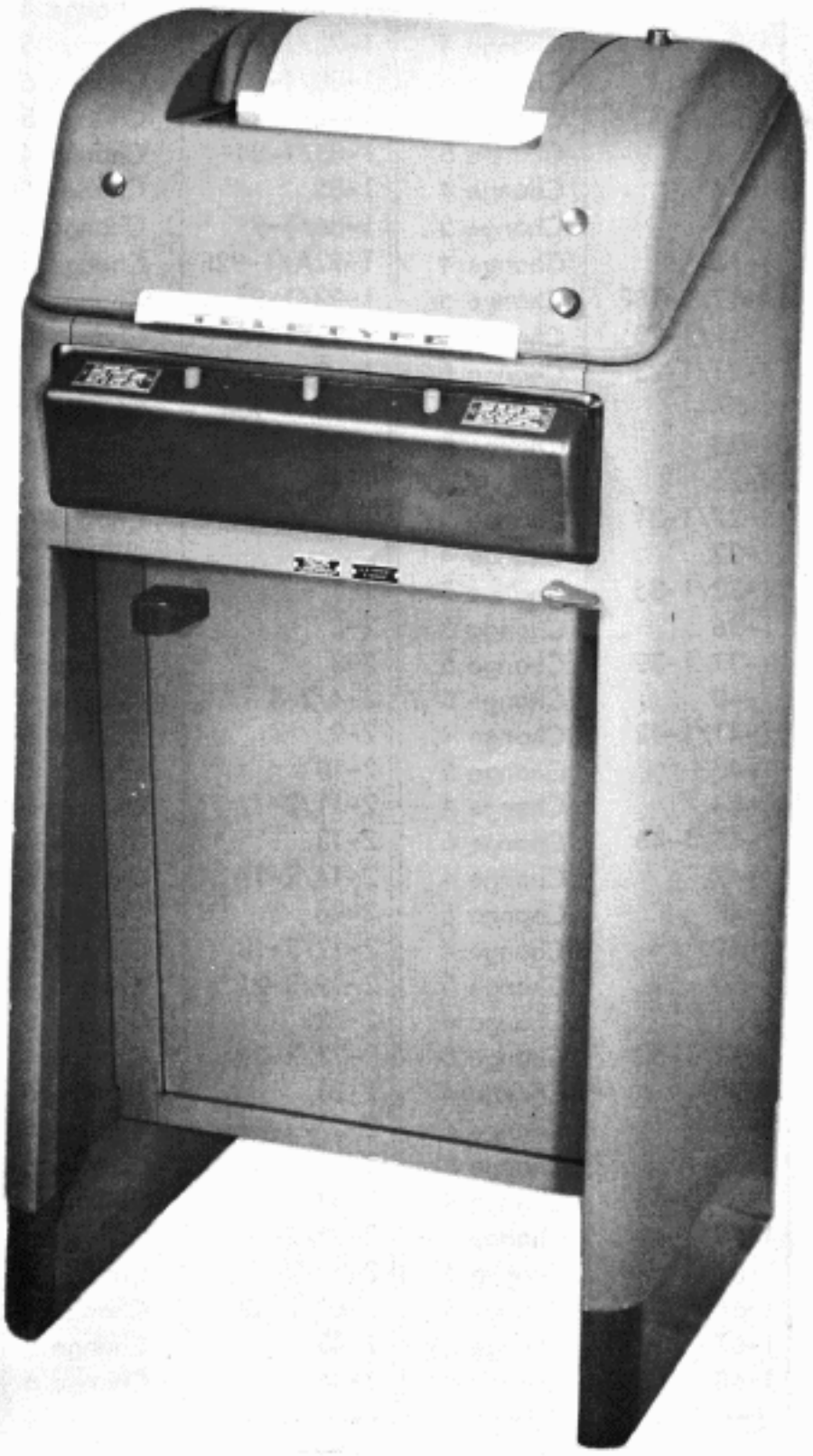

SEND-RECEIVE, WALL MOUNTED SET

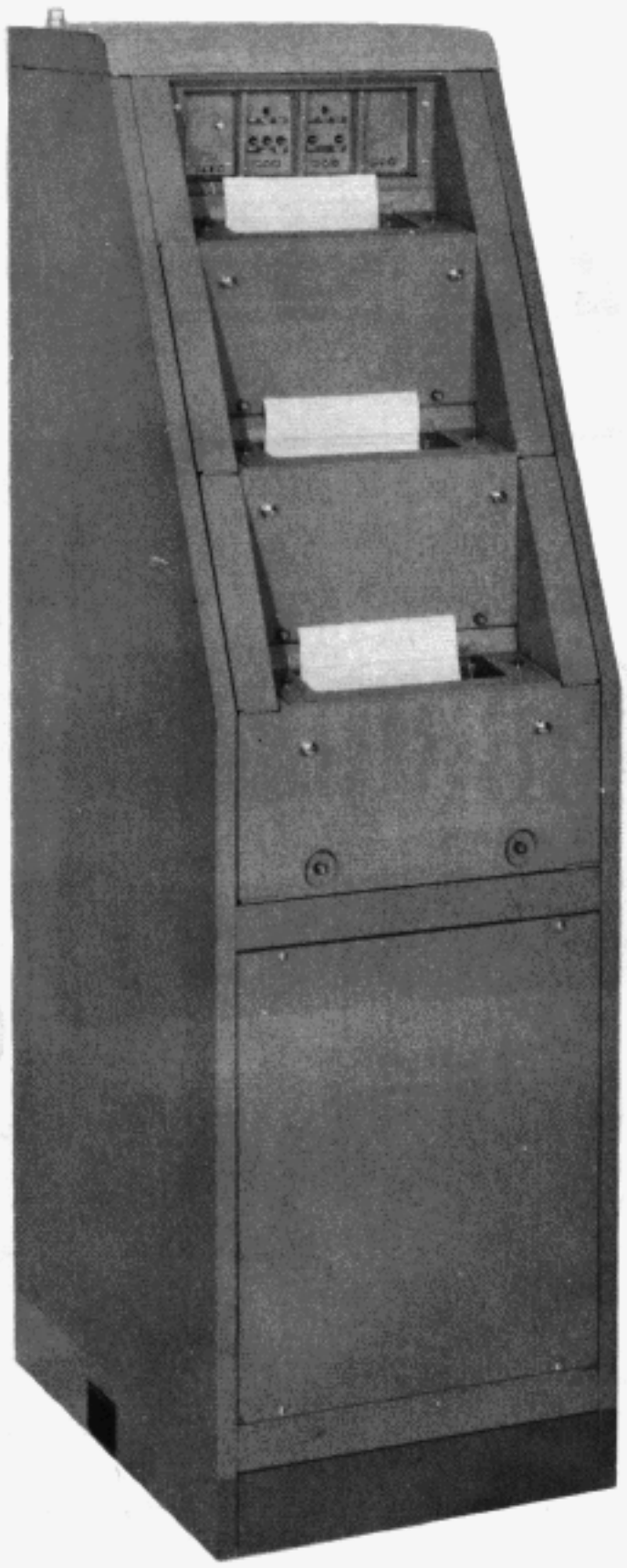

RECEIVE - ONLY SET
(Three Page Printers in Universal Cabinet)

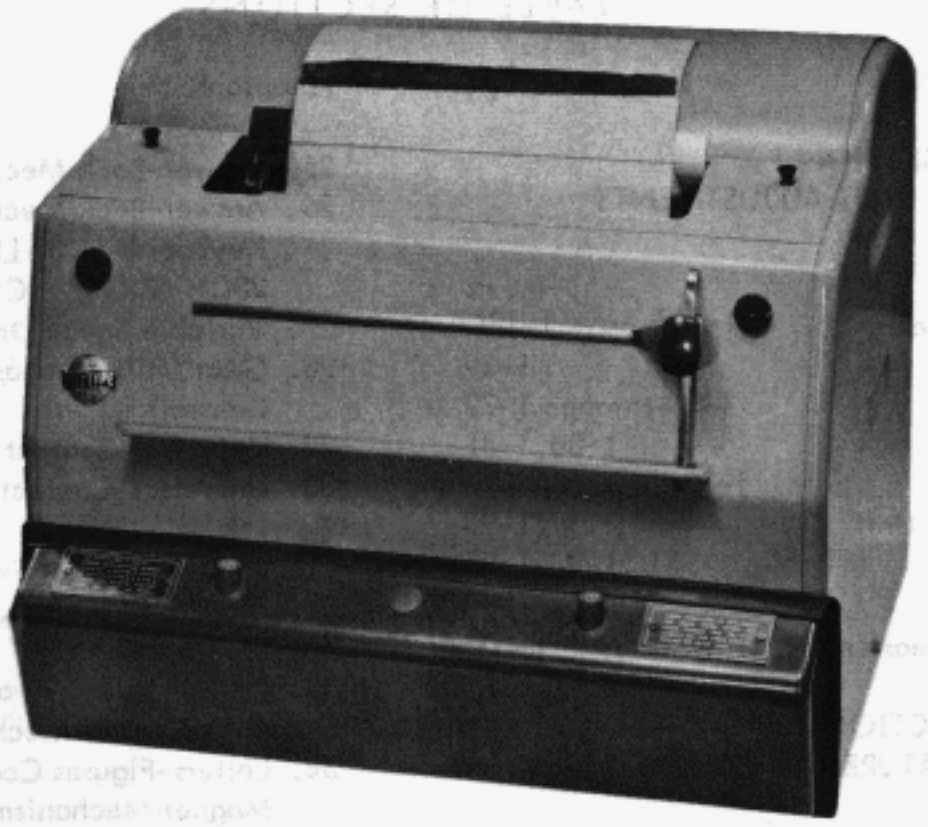

RECEIVE - ONLY SET
(Table or Rack Mounted)

SEND - RECEIVE SET
(Table or Rack Mounted)

TABLE OF SECTIONS

Paragraph		Page
	SECTION 1 STANDARD UNIT ADJUSTMENTS	
1.	General	1-1,1-2
2.	Keyboard (New Design)	1-3 through 1-18C
3.	Base	1-19
4.	Typing Unit	1-19 through 1-79
5.	Motors	1-80,1-81
6.	Cabinet	1-82 through 1-92F
7.	Electrical Service Unit	1-93
8.	Paper and Ribbon	1-94,1-95
9.	Tools	1-96
10.	Disassembly and Reassembly	1-96 through 1-107
	SECTION 2 VARIABLE FEATURE ADJUSTMENTS	
1.	Repeat Space Mechanism	2-1
2.	Time Delay Mechanism	2-2 through 2-5
3.	Signal Line Break Mechanism	2-6
4.	Paper Feed-Out Mechanism	2-7
5.	Sprocket Feed Mechanism	2-8 through 2-15
6.	Horizontal Tabulator Mechanism	2-16 through 2-25
7.	Page Feed-Out Mechanism	2-26,2-27
8.	Selective Calling Mechanism	2-28 through 2-30
9.	Local Back Space Mechanism	2-31 through 2-33
10.	Reverse Line Feed Mechanism	2-34 through 2-37
11.	Motor Control Relay Mechanism	2-38
12.	End-of-Form Alarm and Low Paper and Paper-Out Switch Mechanisms	2-39
13.	Off-Set Copyholder	2-40
14.	Directory Holder (TWX)	2-40
15.	Print Suppression Mechanism	2-41
16.	Continuous Spacing and Triple Line Feed Mechanism	2-42,2-43
17.	Line Test Key	2-44
18.	Paper-Out Alarm	2-44
19.	Off-Line Contact	2-45,2-46
20.	Vertical Tabulation and Transmitter Distributor Control	2-47 through 2-50
21.	Universal Keyboard Switch	2-51
22.	Blinding (Pulsing) Contact	2-52 through 2-54
23.	Lock Bar Contacts	2-54
24.	Answer-Back Mechanism (Dial TWX) Keyboards LK6 and up (Bell 28D and up) "FIGS" "C"	2-55 through 2-61
25.	Answer-Back Mechanism "FIGS" "D"	2-61
26.	Answer-Back Mechanism (Dial TWX) Keyboards LK3, LK4, LK5 (Bell 28A, 28C) "FIGS" "C"	2-62 through 2-66
27.	Variable Speed Drive Mechanism	2-67,2-68
28.	Gear Shift Mechanism (Remote Control)	2-69,2-70
29.	Universal Contact (Selector)	2-71
30.	Universal Contact (Stunt Box)	2-72 through 2-74
31.	Form Alignment Switch	2-75
32.	Print Suppression, D. C. Magnet Operated	2-76
33.	Print Suppression and Off Line Stunt Shift Control Mechanism	2-77
34.	Letters-Figures Code Bar Shift Magnet Mechanism	2-78
35.	Form Feed-Out Mechanism	2-79,2-80
36.	Two Color Ribbon Mech.	2-81,2-82
37.		
38.		
39.		
	SECTION 3 LUBRICATION	
1.	General	3-1
2.	Disassembly	3-2
3.	Cabinet	3-3
4.	Keyboard (Earlier Design)	3-4 through 3-10
5.	Typing Unit	3-11 through 3-33
6.	Variable Features	3-34 through 3-55F
7.	Keyboard (New Design and Variable Features)	3-56 through 3-75
	SECTION 4 EARLIER DESIGN MECHANISM ADJUSTMENTS	
1.	Keyboard	4-1 through 4-22
2.	Typing Unit	4-23 through 4-39
3.	Variable Features	4-40 through 4-50

Paragraph Page Paragraph Page

TABLE OF CONTENTS

SECTION 1
STANDARD UNIT ADJUSTMENTS AND SPRING TENSIONS

1. GENERAL 1-1,1-2

2. KEYBOARD

ADJUSTMENTS

Code Bar Bail and Non-Repeat Lever Mechanism
- Code Bar Bail 1-9
- Code Bar and Code Lever Clearance 1-7
- Code Bar Bail and Non-Repeat Lever Clearance 1-9
- Code Bar Guide Clearance 1-3

Function Bail and Lock Ball Track Mechanism
- Function Bail and Code Lever Clearance 1-8
- Lock Ball Channel 1-8

Intermediate Gear Bracket 1-13,1-18B
Keylock Latch Assembly 1-18A
Mounting Typing Unit on Keyboard or Base 1-17
Plastic Window 1-18E
Signal Generator Clutch & Gear Mechanism
- Clutch Shoe Lever 1-4
- Clutch Stop Lever 1-5

Signal Generator Frame 1-17
Space Bar Bail Pivot 1-3
Transfer Bail and Contact Box Mechanism
- Signal Contact Clearance 1-6
- Signal Contact Strobbing 1-18C,1-18D
- Transfer Bail Detent Plate 1-6

Universal Bail Latch Lever & Local Line Feed Trip Link Mechanism
- Universal Bail Extension 1-11
- Universal Bail Latch Lever (Prelim.) 1-11

Wedgelock & Ball Track Mechanisms
- Ball-Lock-Wedge, Ball End-Play & Universal Bail Latch (Final) 1-10
- Ball Wedgelock & Ball Track Clearance (Prelim.) 1-10
- Lock Ball End Play (Prelim.) 1-10

SPRING TENSIONS

Code Bar & Code Lever Mechanism
- Clutch Trip Bar 1-7
- Code Bar 1-7
- Lock Bar 1-7

Code Bar Bail & Line Break Lever
- Code Bar Bail 1-14
- Line Break Lever 1-14

Code Bar Bail & Non-Repeat Lever Mechanism
- Code Bar Bail Latch 1-9
- Non-Repeat Lever 1-9

Code Lever & Local Carriage Return Function Bail Mech.
- Code Lever 1-15
- Local Carriage Return Function Bail 1-15

Code Lever Universal Bail 1-3
Keylock Latch (Wall Mtg.) 1-18A
Signal Generator Clutch & Lever Mech.
- Clutch Latch Lever 1-5
- Clutch Shoe 1-12
- Clutch Shoe Lever 1-12
- Clutch Stop Lever 1-5

Transfer Bail & Contact Box Mech.
- Signal Contact 1-6
- Signal Contact Drive Link 1-6
- Transfer Bail Detent Latch 1-6

Transfer Lever & Margin Indicator Mech.
- Margin Indicator 1-16
- Transfer Lever 1-16
- Transfer Lever Locking Bail 1-16

Universal Bail Latch Lever & Local Line Feed Trip Link Mechanism
- Local Line Feed Trip Link 1-11
- Plunger 1-11
- Universal Bail Latch 1-11

3. BASE ADJUSTMENTS AND SPRING TENSIONS 1-19

4. TYPING UNIT

ADJUSTMENTS

Carriage Return Mechanism
- Carriage Return Latch Bail 1-52
- Carriage Return Lever 1-53
- Left Margin 1-55

Clutch Mechanism
- Clutch Drum Position (Except Selector) 1-37
- Clutch Shoe Lever 1-36
- Code Bar Clutch Trip Lever 1-31
- Function Clutch Trip Lever 1-32
- Line Feed Clutch Trip Lever Adj. Screw 1-35
- Line Feed Clutch Trip Lever Eccentric Post 1-35
- Spacing Clutch Trip Lever 1-34
- Type Box Clutch Trip Lever 1-36
- Type Box Clutch Trip Lever Eccentric Post 1-35

Paragraph	Page
Code Bar Detent	1-78
Code Bar Shift Mechanism	
Code Bar Shift Lever Drive Arm	1-29
Code Bar Shift Lever Link Bracket	1-30
Intermediate Arm Backstop Bracket	1-28
Selector Cam Lubricator	1-28
Transfer Lever Eccentric	1-27
Dash Pot Vent Screw	1-54
Figs - Ltrs Shift Code Bar Operating Mechanism	1-46
Function Contacts	1-76
Function Reset Bail Blade	1-45
Horizontal Positioning Mechanism	
Horiz. Pos. Drive Linkage	1-48
Reversing Slide Adjusting Stud	1-47
Reversing Slide Brackets	1-47
Line Feed & Rocker Shaft Mechanism	
Line Feed Clutch Phasing	1-39
Line Feed Spur Gear Detent Eccentric	1-69
Rocker Shaft Left Bracket	1-39
Margin Indicator Lamp	1-79
Paper Finger	1-75
Paper Straightener Collar	1-74
Printing Mechanism	
Printing Arm	1-62
Printing Carriage Lower Roller	1-58
Printing Carriage Position	1-59
Printing Hammer Bearing Stud	1-59
Printing Hammer Stop Bracket	1-62
Printing Track	1-61
Type Box Alignment	1-63
Range Finder Mechanism	
Range Finder Knob Phasing	1-25
Selector Clutch Stop Arm	1-25
Ribbon Mechanism	
Ribbon Feed Lever Bracket	1-65
Ribbon Reverse Detent	1-64
Ribbon Reverse Spur Gear	1-64
Right Margin	1-56
Right Margin With Auto. CR - Line Feed Ring	1-73
Selector Mechanism	
Receiving Margin for Dual Speed Operation (60 & 100 WPM)	1-26
Selector Armature (1 & 2 Button)	1-22A
Selector Clutch Drum	1-23
Selector Magnet Bracket	1-21
Selector Receiving Margin	1-26
Shift and Positioning Mechanism	
Rocker Shaft Bracket Eccentric Stud	1-40
Shift Linkage	1-60
Spacing Mechanism	
Carriage Draw - Wire Rope	1-50
Oscillating Rail Slide Position	1-43
Spacing Gear Clearance	1-38
Spacing Gear Phasing	1-38
Spacing Trip Lever Bail Cam Plate	1-44
Stripper Blade Drive Cam Position	1-70
Stunt Box Clip	1-68
Trip Latch Mechanism	
Anti-Deflection Plate	1-33
Clutch Trip Shaft Set Collars	1-33
Unshift-on-Space Function Pawl	1-77
Vertical Positioning Mechanism	
Left Vertical Positioning Lever Eccentric Stud	1-42
Right Vertical Positioning Lever Eccentric Stud	1-41
Vertical Positioning Lock Lever	1-49

SPRING TENSIONS

Paragraph	Page
Carriage Return Mechanism	
Automatic Carriage Return - Line Feed Bell Crank	1-55
Carriage Return	1-51
Carriage Return Latch Bail	1-52
Spacing Feed Pawl Release Link	1-51
Clutch Mechanism	
Clutch Latch Lever (Except Selector)	1-31
Clutch Shoe	1-37
Clutch Shoe Lever	1-37
Clutch Trip Lever	1-34
Code Bar Clutch Cam Follower	1-32
Trip Shaft Lever	1-31
Code Bar Detent	1-78
Code Bar Shift Mechanism	
Common Transfer Lever	1-27
Transfer Lever	1-27
Code Bar Yield	1-78
Decelerating Slide	1-57
Function Contact	1-76
Function Reset Bail	1-45
Horizontal Positioning Mechanism	
Horizontal Positioning Drive Linkage	1-48
Reversing Slide Detent	1-47
Horizontal Stop Slide	1-74
Keyboard Lock Lever	1-54
Line Feed Mechanism	
Line Feed Bar Bell Crank	1-69
Line Feed Bar Release Lever	1-69
Platen Detent Bail	1-69
Line Feed Stripper Bail	1-71
Paper Finger	1-75
Paper Pressure Bail	1-75
Paper Straightener Lever	1-74
Pressure Roller Lever	1-75
Printing Mechanism	
Printing Hammer Operating Bail	1-61
Printing Hammer Operating Bail Latch	1-61
Printing Hammer Plunger	1-61
Printing Hammer Yield	1-61
Type Box Carriage Roller Arm	1-58
Type Pallet	1-62

Paragraph	Page
Ribbon Mechanism	
Ribbon Feed Lever	1-65
Ribbon Lever	1-66
Ribbon Ratchet Wheel Friction	1-65
Ribbon Reverse Detent Lever	1-64
Ribbon Tension	1-66
Selector Mechanism	
Marking Lock Lever	1-22C
Push Lever Reset Bail	1-24
Selector Armature	1-22B
Selector Clutch Latch Lever	1-24
Selector Lever	1-23
Selector Push Lever	1-23
Spacing Lock Lever	1-24
Start Lever	1-22C
Shift & Positioning Mechanism	
Breaker Slide Bail	1-40
Horizontal Positioning Lock Lever	1-40
Shift Linkage	1-60
Single - Double Line Feed Stripper Bail Assembly	1-72
Spacing Cutout Transfer Bail	1-56
Spacing Mechanism	
Lower Draw - Wire Rope Pulley	1-50
Spacing Feed Pawl	1-43
Spacing Trip Lever	1-44
Spacing Trip Lever Bail	1-44
Spacing Suppression Bail	1-71
Stunt Box Mechanism	
Function Bar	1-67
Function Lever	1-67
Function Pawl	1-67
Transfer Slide	1-54
Vertical Positioning Mechanism	
Vertical Positioning Lever	1-41
Vertical Positioning Lock Lever	1-42
5. MOTORS	
ADJUSTMENTS	
Governed Motor Positioning	1-80
Governed Motor Speed	1-81
Governor Contact	1-80
Governor Contact Backstop	1-80
Synchronous Motor Positioning	1-80
SPRING TENSIONS	
Governor Brush Spring	1-81
6. CABINET	
ADJUSTMENTS	
Bearing Bracket	1-91
Carriage Return & Line Feed Levers	1-89
CR; LF & Break Levers (R.O.)	1-92E
Copyholder	1-85
Copylamp	1-85,1-92F
Counterbalance	1-84
Cradle	1-82
Detent Arm & Detent Bracket	1-84
Dome	1-83
Dome Catch	1-83
Dome Centering	1-92
Friction Clutch Torque	1-90
Hinge Mounts (Wall Mounted)	1-92B
Indicator Lamp	1-85
Keytop Cover (R.O.)	1-92C
Keytop Guide & Cover	1-92D
Keytop Guide Plate Cover	1-92C
Lower Door Hinge Mounts	1-92E
Paper Spindle Cylinder Regulating Bushing	1-90
Paper Spindle Shaft End Play	1-90
Power Switch	1-92D
Pulley Alignment	1-91
Remote Signal Bell	1-82
Slide Stops	1-89
Small Door	1-84
Small Door (Table or Rack Mtg. Cabinet	1-92
Small Door Catch	1-83
Small Door Stop Arm	1-84
Winder Assembly	1-90
Window & Paper Guide	1-85,1-92F
SPRING TENSIONS	
Armature	1-82
7. ELECTRICAL SERVICE UNIT	
ADJUSTMENTS	
Start Magnet Core	1-93
SPRING TENSIONS	
Intermediate Lever	1-93
Start Armature	1-93
Stop Armature	1-93
8. PAPER AND RIBBON	1-94
Path of Paper	1-95
Path of Ribbon	1-95
9. TOOLS	1-96
10. DISASSEMBLY AND REASSEMBLY	1-96
a. Typing Unit	1-96
(1) Type Box	1-96
(2) Printing Carriage	1-96
(3) Type Box Carriage	1-96
(4) Front Plate	1-97

Paragraph		Page
	(5) Stunt Box	1-97
	(6) Function Bar, Pawl, Lever and Lever Spring Plate or Latch	1-98
	(7) Code Bars	1-98
	(8) Main Shaft	1-99
	(9) Upper Draw Wire Rope	1-99
	(10) Lower Draw Wire Rope	1-100
	(11) Platen (Friction Feed)	1-100
	(12) Platen (Sprocket Feed)	1-100
	(13) Selector Cam-Clutch	1-101
	(14) Selector Mechanism	1-101
	(15) Code Bar Positioning Mechanism	1-101
	(16) Range Finder Assembly	1-101
	(17) Selector Magnet Assembly	1-102
b.	Keyboard (Earlier Design)	1-102
	(1) Signal Generator	1-102
	(2) Keyboard Selector Cam Assembly	1-102
	(3) Keyboard Label	1-102
	(4) Keylever Cover	1-103
	(5) Keylever	1-103
	(6) Space Bar	1-103
	(7) Keytop Guide Plate	1-103
	(8) Keyboard Lockball Channel	1-103
	(9) Sealing Plate	1-103
	(10) Keyboard Lock-Local Line Feed Mechanism	1-104
	(11) Keyboard Code Bar Assembly	1-104
	(12) Code Bar	1-104
c.	Keyboard (New Design)	1-104
	(1) Signal Generator	1-104
	(2) Keyboard Labels, Keyboard Hood, Keyboard Front Seal and Keyboard Seal Plates	1-105
	(3) Keyboard	1-105
	(4) Signal Generator Contact Box Assembly	1-105
	(5) Transfer Lever Locking Bail	1-105
	(6) Signal Generator Shaft	1-106
	(7) Keytop Guide Plate	1-106
d.	Motor Units	1-106
e.	Electrical Service Unit	1-106

SECTION 2
VARIABLE FEATURE ADJUSTMENTS

1. REPEAT-ON-SPACE MECHANISM

ADJUSTMENTS

Space Bar	2-1
Stop	2-1
Travel Screw	2-1

SPRING TENSIONS

Space - Repeat Lever	2-1

2. TIME DELAY MECHANISM

ADJUSTMENTS

Time Delay Disabling Device	2-5
Time Delay Mechanism Position	2-4
Time Delay Switch Position	2-2

SPRING TENSIONS

Contact Latch Pawl	2-3
Contact Pawl	2-3
Eccentric Follower Pawl	2-5
Time Delay Ratchet Wheel	2-2

3. SIGNAL LINE BREAK MECHANISM (BASE)

Break Keylever Spring Tension	2-6
Lever Extension	2-6

4. PAPER FEED OUT MECHANISM

Switch Lever Spring Tension	2-7

5. SPROCKET FEED MECHANISM

ADJUSTMENTS

Copy Winder (Cabinet)	2-14
Front Form Guide (Cabinet)	2-13
Guide Bracket (Cabinet)	2-13
Left Margin	2-9
Line Feed Spur Gear Detent Eccentric	2-10
Paper Finger or Guide Bracket	2-11
Paper Guide	2-12
Platen End Play	2-10
Printed Line	2-10
Printing Carriage Position	2-9
Printing Hammer Stop Bracket	2-9
Rear Form Guide (Cabinet)	2-13
Ribbon Reverse Detent	2-12
Ribbon Reverse Spur Gear	2-12
Right Margin	2-9
Sprocket Pin Separation	2-10
Type Box Alignment	2-9
Type Box Position	2-8

SPRING TENSIONS

Line Feed Bar Bell Crank	2-12
Paper Finger or Guide Bracket Latch	2-15
Paper Finger or Guide Bracket Shaft	2-15
Platen Detent Bail	2-15
Sprocket Pin Spring	2-12

6. HORIZONTAL TABULATOR MECHANISM (NEW DESIGN)

Paragraph	Page
ADJUSTMENTS	
Cam Arm Stripper Bail	2-19
Latch Bail Adjusting Plate	2-18
Operating Lever Adjusting Plate	2-17
Operating Lever Slide Arm	2-17
Right Margin	2-20
Spacing Clutch Trip Lever	2-16
Spacing Cut-Out Transfer Bail Set Collar	2-19
Tabulator Pawl - Horizontal (Final)	2-23
Tabulator Pawl (Prelim.)	2-21
Tabulator Pawl - Vertical (Final)	2-22
Tabulator Stop Settings	2-24
Transmitter Control Contact Gap	2-25
Trip Lever Arm Latch Bail	2-18
SPRING TENSIONS	
Blocking Lever	2-22
Clutch Trip Lever	2-16
Horizontal Tabulator Slide Arm	2-19
Intermediate Bail	2-18
Operating Lever Cam Arm	2-19
Operating Lever Slide Arm	2-17
Space Suppression By-Pass	2-20
Tabulator Pawl	2-22
Transmitter Control Contact	2-25
Trip Lever Arm Latch Bail	2-18
7. PAGE FEED-OUT MECHANISM	
ADJUSTMENTS	
Blocking Arm	2-27
Indexing Disk	2-26
Mounting Bracket	2-26
Page Feed-Out Gear Play	2-26
Pointer	2-27
Switch Operating Arm	2-26
SPRING TENSIONS	
Blocking Arm	2-27
8. SELECTIVE CALLING MECHANISM	
ADJUSTMENTS	
Blocking Bail	2-29
Code Bar Shift Mechanism	2-28
Condition Code (Zero) Code Bar Shift Mechanism	2-28
Off Line Shift Solenoid Bracket Assembly	2-28
Type Box Clutch Suppression Arm	2-29
Type Box Clutch Trip Lever	2-28
SPRING TENSIONS	
Automatic Carriage Return - Line Feed Blocking Slide	2-30
Condition Code Shift Fork	2-30
Off Line Stunt Shift Solenoid	2-29
Print Suppressor Code Bar Spring	2-28
9. LOCAL BACK SPACE MECHANISM	
ADJUSTMENTS	
Camming Bail Stop Arm	2-33
Transfer Bail Adjusting Lever	2-32
SPRING TENSIONS	
Back Space Transfer Bail	2-31
Back Space Trip Link Horizontal	2-31
Back Space Trip Link Vertical	2-31
Camming Bail	2-33
10. REVERSE LINE FEED MECHANISM	
ADJUSTMENTS	
Line Feed Clutch Spur Gear	2-35
Line Feed Spur Gear Detent Eccentric	2-36
Reverse Line Feed Slide Link Stop Bracket	2-34
SPRING TENSIONS	
Line Feed Bar	2-37
Line Feed Bar Bell Crank	2-37
Line Feed Bar Release Lever	2-36
Platen Detent Bail	2-36
Reverse Line Feed Slide Link	2-34
Reverse Line Feed Trip Link Horizontal	2-34
Reverse Line Feed Trip Link Vertical	2-34
11. MOTOR CONTROL RELAY MECHANISM	
ADJUSTMENTS	
Inner Contact Spring Gap	2-38
Switch Position	2-38
SPRING TENSIONS	
Middle Contact	2-38
Outer Contact	2-38
12. END-OF-FORM ALARM MECHANISM AND LOW-PAPER AND PAPER-OUT SWITCH ASSEM.	
ADJUSTMENTS	
End-of-Form Lever	2-39
SPRING TENSIONS	
Low-Paper and Paper-Out	2-39

Paragraph	Page
13. OFF-SET COPYHOLDER	
ADJUSTMENTS	
Copyholder Bracket and Top Bracket Alignment on Table Mounted Cabinet	2-40
Pivot Arm and Line Guide	2-40
14. DIRECTORY HOLDER (TWX)	2-40
15. PRINT SUPPRESSION DURING SELECTION	
ADJUSTMENTS	
Suppression Code Bar Mechanism	2-41
Zero Code Bar Shift Mechanism	2-41
16. CONTINUOUS SPACING	
ADJUSTMENTS	
Carriage Return Lever	2-43
Function Clutch Trip Lever	2-42
Suppression Bail Adjusting Bracket	2-43
SPRING TENSIONS	
Reset Bail Operating	2-43
Solenoid Plunger	2-42
17. LINE TEST KEY	2-44
18. PAPER-OUT ALARM	
ADJUSTMENT AND SPRING TENSION	
Bell Crank Follower	2-44
19. OFF-LINE CONTACT	
ADJUSTMENTS	
Backspace Keylever Operated Switch Position	2-46
Contact Bracket	2-45
Solenoid Mounting Bracket Position	2-45
Solenoid Operated Switch Plate Position	2-46
SPRING TENSIONS	
Code Bar	2-46
Contact	2-46
Solenoid Bail	2-45
Switch Operating Lever	2-46
20. VERTICAL TABULATION AND TRANSMITTER DISTRIBUTOR CONTROL	
ADJUSTMENTS	
Blocking Lever	2-48
Indexing Disk	2-47
Mounting Bracket	2-47
Page Feed-Out Gear Play	2-47
Page Feed-Out Index Plate Position	2-49
Pointer	2-48
Tabulation Index Plate Position	2-49
Transmitter Control Switch	2-49
Vertical Tabulator Slide Retainer	2-47
SPRING TENSIONS	
Blocking Lever	2-49
Form-Out Pawl	2-50
Line Feed Clutch Trip Lever	2-50
Stunt Box Switch	2-50
Switch Contact Pressure	2-48
Tabulator Bail	2-50
21. UNIVERSAL KEYBOARD SWITCH	
ADJUSTMENTS	
Keyboard Universal Switch-Horizontal	2-51
Keyboard Universal Switch-Prelim.	2-51
Keyboard Universal Switch-Vertical	2-51
22. BLINDING CONTACT (PULSING CONTACT)	

Paragraph	Page
ADJUSTMENTS	
Cam Follower Arm	2-52,2-53
Contact Alignment	2-52
Contact Gap	2-52
Contact Guard	2-53
Special Requirements	2-54
Strobe Requirements	2-54
SPRING TENSIONS	
Contact Spring	2-52
23. LOCK BAR CONTACTS (ELECTRICAL SEND-RECEIVE BREAK MECHANISM)	
ADJUSTMENT AND SPRING TENSION	2-54
24. ANSWER-BACK MECHANISM (DIAL TWX) KEYBOARDS LK6 AND UP (BELL 28D AND UP)	
ADJUSTMENTS	
Character Generator Mounting Plate	2-56
Coding the Message Drum	2-60
Drive Link	2-57
"Figures" Stunt Box Contact	2-61
Latch Operating Lever Adjusting Screw	2-58
Magnet Yoke	2-55
Motor Control Relay Switch	2-59
Stepping Pawl	2-58
Stop Lever Latch	2-55
SPRING TENSIONS	
Armature Latch	2-59
Blocking Lever	2-59
Detent Lever	2-56
Drive Link	2-57
Latch Operating Lever	2-58
Sensing Lever	2-56
Stepping Pawl	2-58
25. ANSWER-BACK MECHANISM ("FIGS" "D") KEYBOARDS LK6 AND UP	
ADJUSTMENT	
Keyboard Lock Bail Eccentric	2-61
26. ANSWER-BACK MECHANISM (DIAL TWX) FOR KEYBOARDS LK3, LK4 AND LK5 (BELL 28A AND 28C)	
ADJUSTMENTS	
Character Generator Mounting Plate	2-64
Contact Assembly	2-63
Contact Assembly Bracket Mounting Screws	2-63
Drive Link	2-65
Keyboard Universal Switch (Horizontal)	2-62
Keyboard Universal Switch (Preliminary)	2-62
Keyboard Universal Switch (Vertical)	2-62
Pulsing Contacts	2-64
Stepping Pawl	2-66
Stop Screw	2-63
Swinger Contact Leaf	2-63
SPRING TENSIONS	
Drive Link	2-65
Stepping Pawl	2-66
Stop Lever	2-66
27. VARIABLE SPEED DRIVE MECHANISM	
ADJUSTMENTS	
Gear Bracket	2-67
Hub Position	2-68
Selector Lever	2-67
Shoulder Screw	2-67
Spreader Post	2-68
28. GEAR SHIFT MECHANISM - REMOTE CONTROL	
ADJUSTMENTS	
Armature Stop	2-70
Clutch Stop Lever	2-70
Gear Shift Magnet	2-70
Gear Shift Mechanism	2-69
SPRING TENSIONS	
Gear Shift Magnet Armature	2-69
29. UNIVERSAL CONTACT (SELECTOR)	
ADJUSTMENTS	
Contact Block	2-71
Contact Drive Arm Position	2-71
Contact Mounting Bracket	2-71
SPRING TENSIONS	
Contact Arm	2-71
30. UNIVERSAL CONTACT (STUNT BOX)	
ADJUSTMENTS	
Contact	2-72
Drive Cam (Timing)	2-73
Fifty Milliseconds Spacing Pulse	2-74
Normally Open Contact Gap	2-74
Normally Closed Contact Spring	2-74
Timing of Normally Closed Contacts	2-74
Latch	2-73
Normally Open Contact Gap	2-72
Timing	2-73
Trip Cam (Timing)	2-73

Paragraph	Page
SPRING TENSIONS	
Contact	2-72
Latch Lever	2-74
Swinger	2-72
31. FORM ALIGNMENT SWITCH	
ADJUSTMENTS	
Form Alignment Switch	2-75
Form Feed-Out Adjustment	2-75
SPRING TENSIONS	
Form Alignment Switch	2-75
32. D.C. MAGNET OPERATED PRINT SUPPRESSION MECHANISM	
ADJUSTMENTS	
Armature Extension Clearance	2-76
Armature Extension Overtravel	2-76
Blocking Bail	2-76
Blocking Bail Extension Clearance	2-76
Type Box Clutch Suppression Arm	2-76
Type Box Clutch Trip Lever	2-76
33. PRINT SUPPRESSION AND OFF LINE STUNT SHIFT CONTROL MECHANISM	
ADJUSTMENTS	
Blocking Bail	2-77
Suppression Code Bar Position	2-77
Type Box Clutch Suppression Arm	2-77
Type Box Clutch Trip Lever	2-77
SPRING TENSIONS	
Print Suppression Magnet Armature Return	2-77
34. LETTERS - FIGURES CODE BAR SHIFT MAGNET MECHANISM	
ADJUSTMENTS	
Shift Magnet Armature	2-78
Shift Magnet Yoke	2-78
SPRING TENSIONS	
Shift Code Bar Return	2-78
Shift Magnet Armature Return	2-78
35. FORM FEED-OUT MECHANISM	
ADJUSTMENTS	
Form Feed-Out Solenoid	2-79
SPRING TENSIONS	
Form Feed-Out Link	2-79
Form Feed-Out Torsion	2-80
Solenoid	2-79
36. TWO COLOR RIBBON	
ADJUSTMENTS	
Operating Requirements - Ribbon Magnet (Final)	2-82
Ribbon Magnet Bracket (L&R); Preliminary	2-81
Ribbon Magnet Hinge Bracket (L&R; Preliminary)	2-81
Ribbon Magnet Hinge Bracket (L&R; Final)	2-81
SPRING TENSIONS	
Armature (L&R)	2-81
Ribbon Guide Lever (L&R)	2-82
Ribbon Roller Bail (L&R)	2-82
Ribbon Reversing Lever (L&R)	2-82

SECTION 3
LUBRICATION

1.	GENERAL	3-1
2.	DISASSEMBLY	3-2
2.02	Base Disassembly	3-2
2.01	Cabinet Disassembly	3-2
2.03	Keylever Cover Disassembly	3-2
2.04	Cabinet Disassembly (Earlier Design)	3-2A
3.	CABINET	3-3
3.05	Cabinet, Carriage Return and Line Feed Keylevers	3-3B
3.03	Cabinet, Cover Latches	3-3B
3.02	Cabinet for Multiple Mounted Page Printer	3-3B
3.04	Cabinet Paper Access Door Latches	3-3B
3.10	Cabinet, Skin Tight (Table or Rack Mounting)	3-3D
3.01	Electrical Service Unit	3-3
3.09	Low Paper and Paper-Out Switch Mech.	3-3D
3.08	Paper Winder Bracket	3-3C
3.06	Paper Winder Clutch Mechanism	3-3C
3.07	Paper Winder Drive Mechanism	3-3C

Paragraph		Page
4.	KEYBOARD - EARLIER DESIGN	3-4 through 3-10
4.09	Code Bar Mechanism	3-6
4.10	Code Bar Mechanism	3-6
4.12	Code Bar Mechanism	3-7
4.13	Code Bar Bail and Eccentric Follower Mechanism	3-7
4.11	Code Lever Bail Mechanism	3-6
4.02	Code Lever Mechanism	3-4
4.08	Contact Box	3-6
4.15	Intermediate Gear Mechanism	3-8
4.17	Intermediate Gears	3-8
4.19	Intermediate Lever Mechanism	3-9
4.01	Keyboard - bottom view	3-4
4.05	Keyboard Lock Mechanism	3-5
4.14	Keyboard Selector Mechanism	3-7
4.06	Keyboard - Upright Position	3-5
4.03	Local Carriage Return Mechanism	3-4
4.04	Local Line Feed Mechanism	3-5
4.07	Margin Indicating Mechanism	3-5
4.16	Signal Generator Mechanism	3-8
4.18	Signal Generator Mechanism	3-9
4.20	Signal Generator Mechanism	3-10
4.21	Signal Generator Clutch	3-10
4.22	Time Delay Mechanism	3-10
5.	TYPING UNIT	3-11 through 3-33
5.31	Carriage Return Mechanism	3-24
5.08	Code Bar Detents	3-14
5.05	Code Bar Mechanism	3-13
5.06	Code Bar Mechanism	3-13
5.07	Code Bar Mechanism	3-14
5.19	Code Bar Mechanism	3-19
5.28	Function Rocker Shaft Mechanism	3-22
5.36	Horizontal Positioning Mechanism	3-26
5.37	Horizontal Positioning Mechanism	3-26
5.38	Horizontal Positioning Mechanism	3-26
5-35	Horizontal Positioning Mechanism (Front View)	3-25
5.10	Left Ribbon Feed Mechanism	3-15
5.40	Letters - Figures Shift Mechanism	3-27
5.41	Letters - Figures Shift Mechanism	3-28
5.54	Line Feed Mechanism	3-33
5.45	Main Shaft (Clutches, Gears, etc)	3-30
5.48	Main Shaft (Clutches, Gears, etc)	3-31
5.46	Main Shaft Mechanism	3-30
5.42	Oscillating Mechanism	3-28
5.43	Oscillating Mechanism	3-29
5.09	Paper Feed Mechanism	3-14
5.02	Printing Mechanism	3-11
5.03	Printing Mechanism	3-12
5.13	Ribbon Feed Mechanism	3-16
5.16	Ribbon Feed Mechanism	3-17
5.15	Ribbon Feed Mechanism - Left Side	3-17
5.12	Ribbon Feed Mechanism - Right Side	3-15
5.26	Ribbon Reverse Mechanism	3-21
5.11	Right Ribbon Feed Mechanism	3-15
5.47	Selector Cam-Clutch Assembly	3-30
5.20	Selector Mechanism	3-19
5-21	Selector Mechanism	3-20
5.27	Shift Mechanism	3-22
5.30	Spacing Drum Drive Mechanism	3-23
5.32	Spacing Drum Feed Mechanism	3-24
5.50	Spacing Mechanism	3-32
5.51	Spacing Mechanism	3-32
5.52	Spacing Mechanism	3-32
5.25	Stripper Blade Mechanism	3-21
5.22	Stunt Box Mechanism	3-20
5.23	Stunt Box Mechanism	3-20
5.24	Stunt Box Mechanism	3-21
5.33	Track Guide Mechanism	3-24
5.04	Type Box Carriage Mechanism	3-12
5.44	Typing Unit - Bottom Upward Position	3-29
5.49	Typing Unit - Bottom Upward Position	3-31
5.29	Typing Unit - Resting on its Back	3-23
5.34	Typing Unit - Resting on its Back	3-25
5.01	Typing Unit - Upright Position	3-11
5.18	Typing Unit - Upright Position	3-18
5.39	Typing Unit - Upright Position	3-27
5.53	Typing Unit - Upright Position	3-33
5.17	Vertical Positioning Mechanism - Left Side	3-18
5.14	Vertical Positioning Mechanism - Right Side	3-16
6.	VARIABLE FEATURES	3-34 through 3-55F
6.54	Bail Extension Arm	3-54
6.36	Base - Upright Position	3-49
6.38	Cabinet - Dome Open	3-50
6.43	Compression Spring	3-51
6.58	Contact Insulators	3-55
6.41	Continuous Spacing Mechanism	3-51
6.65	D.C. Magnet Operated Print Suppression Mech.	3-55E
6.39	End-of-Form Alarm Mechanism (Cabinet)	3-50
6.63	Form Alignment Mechanism	3-55D
6.68	Form Feed Out Mechanism (Local)	3-55F
6.47	Horizontal Tabulator - Blocking Lever	3-53
6.52	Horizontal Tabulator - Intermediate Bail	3-54
6.50	Horizontal Tabulator - Latch Bail	3-54
6.49	Horizontal Tabulator - Operating Lever	3-53
6.51	Horizontal Tabulator- Operating Lever	3-54
6.12	Horizontal Tabulator - Operating Lever Mech. (Earlier Design)	3-38
6.48	Horizontal Tabulator - Slide Arm	3-53
6.10	Horizontal Tabulator - Space Suppression Mech.	3-37
6.13	Horizontal Tabulator - Spacing Clutch Mechanism (Earlier Design)	3-39

Paragraph		Page
6.53	Horizontal Tabulator – Spacing Cut-out Transfer Bail	3-54
6.09	Horizontal Tabulator – Tabulator Shaft Mechanism (Earlier Design)	3-37
6.56	Keyboard – Top View	3-55
6.01	Keyboard – Upright Position	3-34
6.22	Keyboard – Upright Position	3-43
6.66	Letters – Figures Code Bar Shift Magnet Mechanism	3-55E
6.23	Local Backspace Mechanism	3-44
6.26	Local Backspace Mechanism	3-45
6.29	Local Backspace Mechanism	3-46
6.24	Local Reverse Line Feed Mechanism	3-44
6.28	Local Reverse Line Feed Mechanism	3-46
6.32	Local Reverse Line Feed Mechanism	3-47
6.55	Off-Line Contacts	3-55
6.34	Page Feed-Out Mechanism	3-48
6.37	Paper Feed-Out Mechanism (Keyboard)	3-49
6.40	Paper Out Alarm Mechanism	3-50
6.31	Paper Spindle Latch Mechanism	3-47
6.67	Print Suppression and Off-Line Stunt Shift Control Mechanism	3-55F
6.02	Repeat on Space Mechanism	3-34
6.21	Selective Calling – Clutch Suppression Mechanism	3-43
6.19	Selective Calling – Function Reset Bail Mechanism	3-42
6.16	Selective Calling – Shift and Stripper Bail Mechanism	3-40
6.18	Selective Calling – Single-Double Line Feed Mechanism	3-41
6.15	Selective Calling – Stripper Bail Mechanism	3-40
6.35	Signal Line Break Mechanism (Base)	3-49
6.03	Signal Line Break Mechanism (Electrical)	3-34
6.42	Slide Arm Bracket	3-51
6.57	Solenoid Bail	3-55
6.53	Spacing Cut-Out Transfer Bail	3-54
6.05	Sprocket Feed-Line Feed Mechanism	3-35
6.06	Sprocket Feed-Paper Guide Mech.	3-36
6.59	Switch Operating Lever	3-55
6.11	Typing Unit – Bottom View	3-38
6.27	Typing Unit – Bottom View	3-45
6.46	Typing Unit – Bottom View	3-52
6.04	Typing Unit – Upright Position	3-35
6.07	Typing Unit – Upright Position	3-36
6.14	Typing Unit – Upright Position	3-39
6.17	Typing Unit – Upright Position	3-41
6.20	Typing Unit – Upright Position	3-42
6.25	Typing Unit – Upright Position	3-44
6.25	Typing Unit – Upright Position	3-47
6.33	Typing Unit – Upright Position	3-48
6.44	Typing Unit – Upright Position	3-51
6.45	Typing Unit – Upright Position	3-52
6.08	Universal Drum Mechanism (New Design)	3-37
6.61	Universal Contact Mechanism	3-55B
6.64	Universal Contact Mechanism (Selector)	3-55D
6.60	Universal Contact Mechanism (Stunt Box)	3-55B
6.62	Vertical Tabulator and Transmitter Distributor Control Mech.	3-55C

7. KEYBOARD – NEW DESIGN 3-56 through 3-75

7.31	Answer Back – Armature Mechanism	3-65
7.33	Answer Back – Code Bars and Sensing Levers	3-66
7.38	Answer Back – Drive Mechanism	3-69
7.34	Answer Back – Driving Mechanism	3-67
7.36	Answer Back – Keyboard Lock Bail Mechanism ("FIGS" "D")	3-68
7.37	Answer Back Mechanism (Dial TWX) LK3, 4 & 5 (Bell 28A & C)	3-69
7.39	Answer Back Mechanism (Dial TWX) LK3, 4 & 5 (Bell 28A & C)	3-70
7.29	Answer Back Mechanism (Dial TWX) LK6 and up (Bell 28D and Up)	3-65
7.30	Answer Back – Sensing Lever Mech.	3-65
7.35	Answer Bace – Stepping Pawl	3-67
7.32	Answer Back – Stop Lever	3-66
7.43	Blinding Contact Mechanism	3-72
7.04	Break Lever Mechanism	3-57
7.44	Cam Follower Mechanism	3-72
7.08	Code Bar Mech.	3-58
7.22	Code Bar Bail Mechanism	3-62
7.05	Code Lever Mechanism	3-57
7.26	Code Lever Universal Bail Mechanism	3-64
7.13	Contact Box	3-60
7.25	Electrical Line Break Mechanism	3-63
7.48	Form Feed-Out Linkage	3-74
7.47	Form Feed-Out Mechanism	3-74
7.15	Function Clutch Mechanism	3-60
7.19	Intermediate Gear Mechanism	3-61
7.01	Keyboard – Bottom View	3-56
7.06	Keyboard Lock Mechanism	3-57
7.07	Keyboard – Upright Position	3-58
7.03	Keylever Mechanism	3-56
7.09	Local Carriage Return Mechanism	3-58
7.17	Local Line Feed Mechanism	3-61
7.28	Local Paper Feed-Out Mechanism	3-64
7.49	Lock Bar Contact Mechanism	3-75
7.27	Lock Bar Latch Mechanism	3-64
7.21	Locking Bail Mechanism	3-62
7.16	Margin Indicating Mechanism	3-61
7.24	New Design Keyboard and Variable Features	3-63
7.11	Non-Repeat Lever Mechanism	3-59
7.37A	Pulsing Contacts	3-69
7.46	Remote Control Gear Shift	3-73
7.45	Remote Control Gear Shift Mechanism	3-73
7.50	Repeat on Space Mechanism	3-75

Paragraph		Page
7.18	Shaft Mechanism	3-61
7.10	Signal Generator Mechanism	3-59
7.20	Signal Generator Mechanism	3-62
7.02	Space Bar Mechanism	3-56
7.14	Transfer Bail Mechanism	3-60
7.12	Transfer Lever Mechanism	3-59
7.23	Universal Bail Latch Lever	3-63
7.40	Variable Speed Drive Mechanism	3-71
7.42	Variable Speed Drive - Speed Selecting Mechanism	3-72
7.41	Variable Speed Drive - Speed Selector Mechanism	3-71

SECTION 4
EARLIER DESIGN MECHANISM ADJUSTMENTS

1. KEYBOARD

ADJUSTMENTS

Clutch Mechanism		
	Clutch Shoe Lever	4-7
	Clutch Stop Lever	4-8
Code Bar and Code Lever Mechanisms		
	Code Bar Bail Adjusting Screw	4-11
	Code Bar Bail & Non-Repeat Lever Clearance	4-13B
	Code Bar Bail Bumper	4-17
	Code Bar Bounce Suppressor Bracket Support Screw	4-18
	Code Bar Guides	4-15
	Code Bar Latch	4-18
	Code Lever Bail	4-19
	Code Lever Bail Latch Lever Eccentric	4-15
	Code Lever Bail Non-Repeat Extension	4-16
	Code Lever Guide	4-18
	Space Bar Pivot	4-19
Generator Contact		4-10
Intermediate Gear Bracket		4-20
Keylever Lock-Ball Channel & Lock Ball End Play		4-14
Non-Repeat Lever		4-13
Signal Generator		
	Detent Toggle Stop Bracket	4-4
	Flutter Lever	4-6
	Intermediate Lever Stop Plate	4-5
	Rocker Bail Detent	4-2
	Rocker Bail Pivot Screw	4-1
	Rocker Extension	4-3
	Selector Lever Guide	4-1

SPRING TENSIONS

Clutch Mechanism		
	Clutch Latch Lever	4-9
	Clutch Stop Lever	4-8
Code Bar & Code Lever Mechanisms		
	Clutch Trip Bar	4-17
	Code Bar	4-17
	Code Bar Bail	4-12
	Code Bar Bail Latch	4-12
	Code Bar Latch	4-18
	Code Lever	4-16
	Code Lever Bail	4-15
	Code Lever Bail Latch Lever	4-13
	Lock Bar	4-17
	Reset Lever	4-11
Contact Box		4-10
Local Carriage Return Bail		4-21
Local Line Feed Trip Link		4-21
Lock Bail		4-21
Margin Indicator		4-22
Overload Mechanism		4-20
Non-Repeat		4-13
Non-Repeat Lever		4-13B
Paper Feed-Out Motor Start Mechanism		4-22
Signal Generator		
	Detent Lever	4-5
	Flutter Lever	4-6
	Intermediate Lever	4-3
	Locking Bail	4-1
	Selector Lever	4-1
	Transfer Lever	4-2

2. TYPING UNIT

ADJUSTMENTS

Anti-Deflection Plate		4-25A
Bell or Motor Stop Function Contact		4-37
Carriage Return Mechanism		
	Automatic Carriage Return & Line Feed Arm	4-35
	Left Margin	4-30
Clutch Mechanism		
	Bail Lever Guide	4-23
	Clutch Trip Shaft Set Collars	4-25A
	Spacing Clutch Trip Lever	4-25B
Code Bar Shift Lever Drive Arm		4-24
Code Bar Shift Lever Link Guide Bracket		4-25
Figs - Ltrs Shift Code Bar Operating Mechanism		4-27
Function Reset Bail Blade		4-28
Function Stripper Blade Arms		4-35
Horizontal Positioning Drive Linkage		4-29
Margin Indicator Lamp		4-39
Oscillating Rail Slide Position		4-26
Printing Mechanism		
	Printing Arm	4-33
	Printing Hammer Stop Bracket	4-33
	Type Box Carriage Roller	4-32

Paragraph	Page
Ribbon Reverse Mechanism	
Ribbon Reverse Detent	4-34
Ribbon Reverse Spur Gear	4-34
Right Margin	4-31
Single - Double Line Feed Lever	4-36
SPRING TENSIONS	
Automatic CR-LF Bell Crank	4-30
Clutch Mechanism	
Clutch Trip Lever	4-25B
Start Lever	4-23
Decelerating Slide Bell Crank	4-31
Function Contact	4-38
Horizontal Positioning Drive Linkage	4-29
Ribbon Reverse Detent Lever	4-34
Shift Linkage	4-32
Spacing Cut-out Transfer Bail	4-31
Spacing Feed Pawl	4-26
Type Pallet	4-33
3. VARIABLE FEATURES	
HORIZONTAL TABULATOR	
ADJUSTMENTS	
Cam Plate Stripper Bail	4-47
Columnar Tabulator Stops	4-50
Operating Lever Adjusting Plate	4-45
Operating Lever Slide Arm	4-45
Pawl Mounting Arm Operating Range (Final)	4-50
Pawl Mounting Arm Operating Range (Prelim.)	4-49
Right Margin	4-48
Spacing Cut Out Transfer Bail Set Collar	4-47
Tabulator Shaft Mounting Brackets	4-48
Tabulator Stop Setting	4-50
Trip Arm Latch Bail	4-46
Trip Arm Latch Bail Adjusting Plate	4-46
SPRING TENSIONS	
Horizontal Tabulator Slide Arm	4-47
Operating Lever Cam Plate	4-47
Operating Lever Extension Link	4-45
Space Suppression By-Pass	4-48
Tabulator Pawl	4-48
Tabulator Shaft	4-45
Trip Arm Latch Bail	4-46
MISCELLANEOUS	
ADJUSTMENTS	
Back Space Transfer Bail Adjusting Lever	4-43
Back Space Transfer Bail Adjusting Lever Horizontal Adj.	4-44
Repeat-on-Space Lever	4-40
Time Delay Disabling Device	4-41
SPRING TENSIONS	
Back Space Transfer Bail	4-43
Back Space Trip Link Horizontal	4-43
Back Space Trip Link Vertical	4-43
Break Keylever	4-42
Break Lever	4-42
Eccentric Follower Pawl	4-41
Repeat-on-Space Lever	4-40
Repeat Space Lever	4-41

SECTION 1 - STANDARD UNIT ADJUSTMENTS

1. GENERAL

a. The adjustments of each unit are arranged in a sequence that would be followed if a complete readjustment of the unit were undertaken. Tools and spring scales required to perform the adjustments are listed in Teletype bulletin 1124B but are not supplied as part of the equipment. After an adjustment has been completed, be sure to tighten any nuts or screws that may have been loosened. The adjusting illustrations, in addition to indicating the adjusting tolerances, positions of moving parts, and spring tension, also show the angle at which the scale should be applied when measuring spring tensions. If a part that is mounted on shims is to be removed, the number of shims used at each of its mounting screws should be noted so that the same shim pile-up can be replaced when the part is remounted.

b. The spring tensions given in this Bulletin are indicated values and should be checked with proper spring scales in the position indicated.

c. Two different arrangements of the LAC cabinet are available to the service man to facilitate maintenance operations.

(1) All LAC cabinets include a tilting arrangement of the front cradle rail which permits the assembled keyboard or base to be tilted forward and supported when the dome is open. To tilt the keyboard, remove the front cross bar on the cabinet by loosening the knurled screw at either end of the bar. Remove the two screws that mount the rear cradle rail to the left and right cradle rails. Raise the keyboard or base assembly up at the rear until the rear cradle rail is secured by the latch provided on the right side of the cabinet. Caution: Route all cables through appropriate cable guides provided to prevent damage to cables or interference with operating mechanisms.

(2) On LAC console cabinets, the lower compartment door may be used as a maintenance tray. Open the compartment door, remove the rod type hinge and take off the door. In initial use, rubber bumpers (supplied with cabinet) are placed on the front two legs of the electrical service assembly (may be left permanently in place). Remove the typing unit from the keyboard or base. Insert the door, with the inside up and the hinge end to the rear, under the terminal block mounting strip. Lower the front end of the door until the handles of the door rest on the front cross bar of the cabinet - the rear of the door rests on the rubber bumpers on the service assembly.

d. References made to LEFT or RIGHT, UP or DOWN, FRONT or REAR, etc. apply to the unit in its normal operating position as viewed from the operator's position in front of the unit.

e. When the requirement calls for a clutch to be disengaged, the clutch shoe lever must be fully latched between its trip lever and latch lever so that the clutch shoes (Figure 1-34) release their tension on the clutch drum. When engaged, the clutch shoe lever is unlatched and the clutch shoes are wedged firmly against the clutch drum.

NOTE

When rotating the main shaft of the Typing Unit by hand, the clutches do not fully DISENGAGE upon reaching their stop positions. In order to relieve the drag on the clutches and permit the main shaft to ROTATE freely, apply pressure on the lug of each clutch disk (Figure 1-35) with a screwdriver to cause it to ENGAGE its latch lever and thus fully DISENGAGE the internal expansion clutch. This procedure should always be followed prior to placing the Typing Unit on the base and switching on the power.

f. The Typing Unit may be safely placed in any one of three positions for servicing: (1) in upright position on its four feet, (2) tilted backward so that it rests on its rear feet and rear points of side frames, (3) bottom upwards so that it rests on two upper points of each side frame. In addition, it may be placed on either end by using the 159358 modification kit (not supplied with unit).

g. When cleaning plastic parts, use soap or detergent and water. Do not use solvents containing alcohol or chlorinated components.

h. Reference made to KEYBOARD means Keyboard base or sending and receiving base. Reference to BASE means receiving only base.

i. Where instructions call for the removal of parts or subassemblies, refer to Disassembly and Reassembly Paragraph 10. Page 1-96.

j. Manual Selection of Characters or Functions.

(1) To manually operate the Typing Unit while removed from Keyboard or Base hold the selector magnet armature (Figure 1-17) operated by means of an armature clip and rotate the main shaft in a counterclockwise direction (by means of the handwheel listed in bulletin 1124B) to bring all clutches to their disengaged position.

NOTE

The armature clip is attached to the armature by carefully inserting the flat-formed end of the clip over the top of the armature between the pole pieces and hooking the extruded projection under the edge of the armature. The top end of the clip should then be hooked over the top of the selector coil terminal bakelite guard. The spring tension of the clip will hold the armature in the marking (attracted) position.

(2) Fully disengage all clutches as described in a preceding note. Release armature momentarily to permit the selector clutch to engage. Turn the main shaft slowly until the No. 5 selector lever has just moved to the peak of its cam. Strip from the selector levers the

push levers which are spacing in the code combination of the character or function that is being selected. It should be noted that selector levers (Figure 1-24) move in succession starting with the inner (Number One). Continue to rotate main shaft until all operations initiated by selector action clear through unit.

k. Variable Features

In addition to standard unit adjustments, which are covered in section 1 of this bulletin, adjustments for a number of Variable Features appear in Section 2. Where adjustments of these Variable Features affect the adjusting sequence, cross reference information has been included in Section 1. Variable Feature adjustments which do not affect the adjusting sequence may be done at any time during the adjusting procedure.

l. Earlier Designed Mechanisms

Section 1 contains illustrations and adjusting procedure for mechanism currently being manufactured. Illustrations and adjusting procedure for mechanisms of earlier design are located in section 4. Where a new mechanism has replaced one of earlier design, reference has been made in section 1 to the corresponding mechanism in section 4.

2. KEYBOARD (NEW DESIGN*)

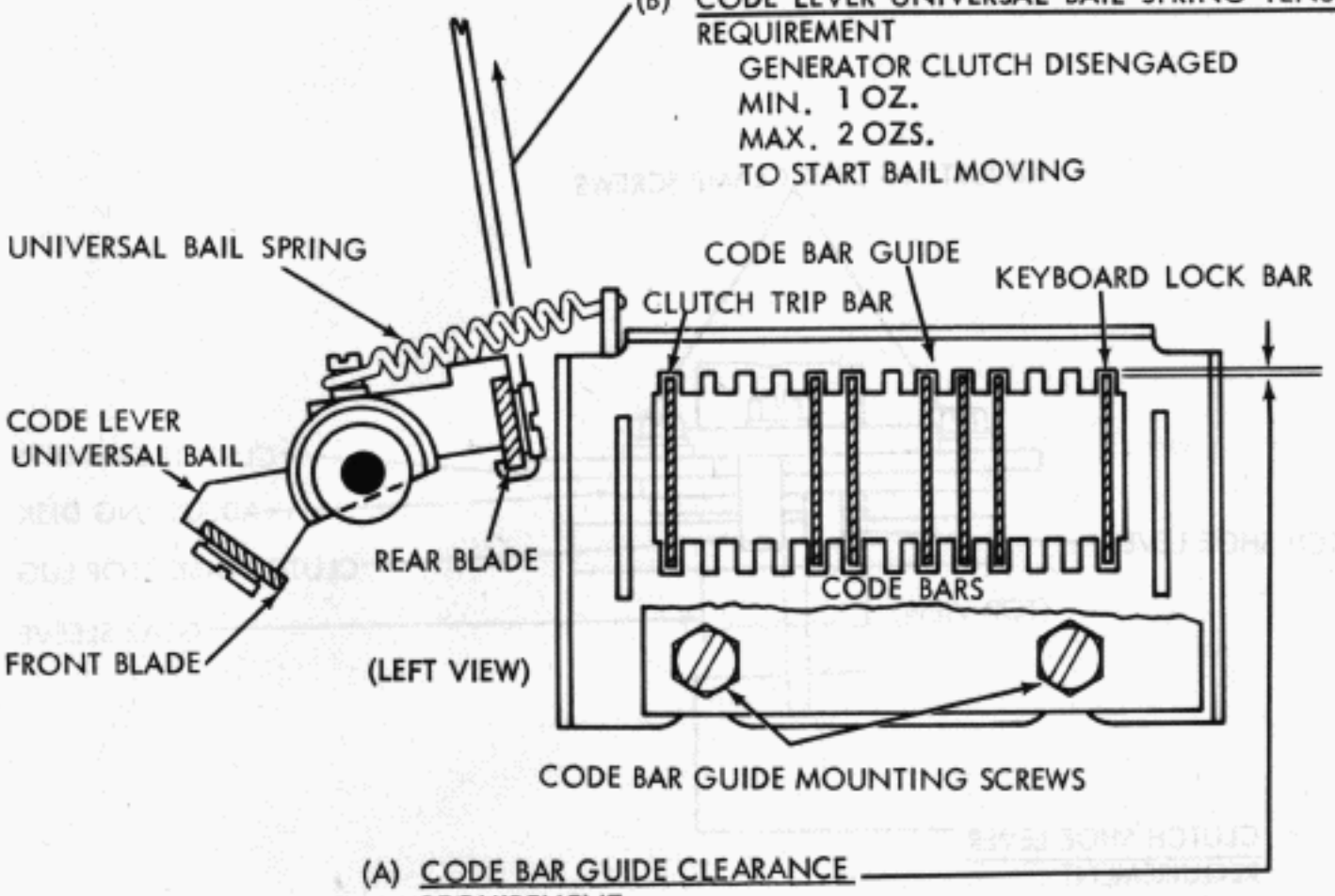

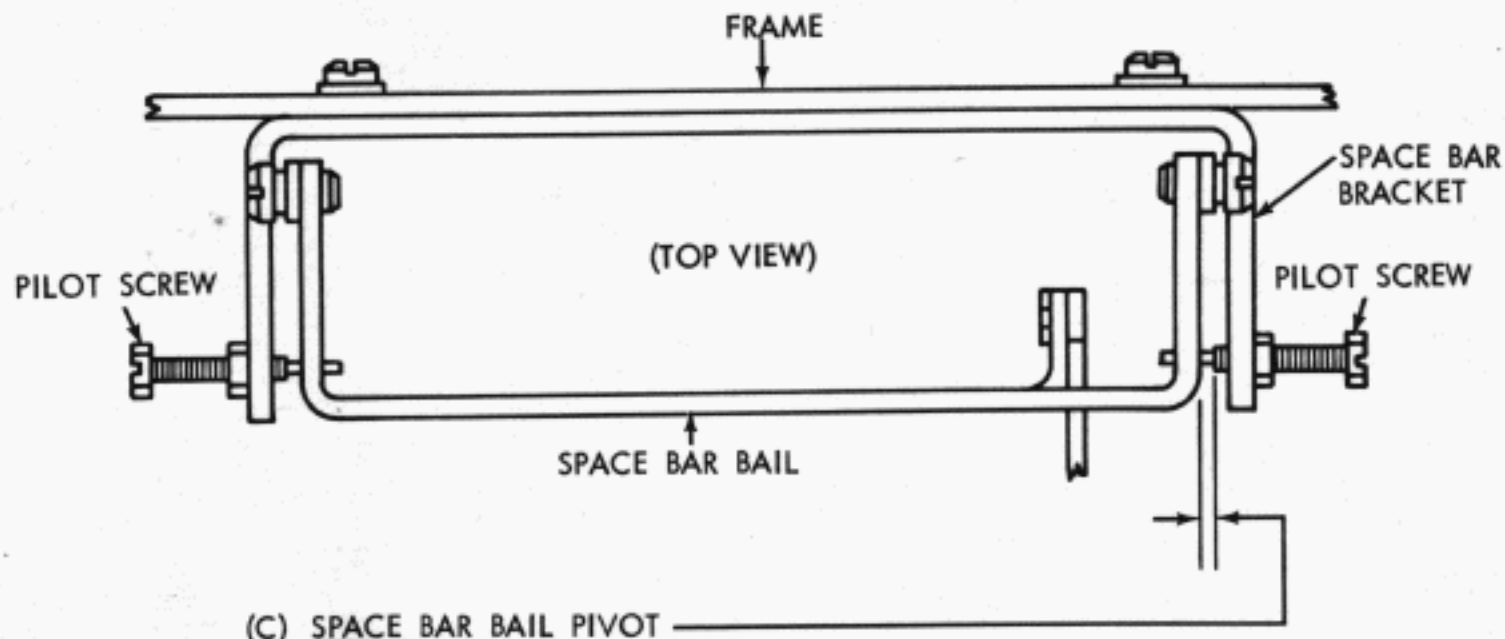

*See Page 1-2, Paragraph 1.

FIGURE 1-1 KEYBOARD, CODE BAR AND SPACE BAR MECHANISMS

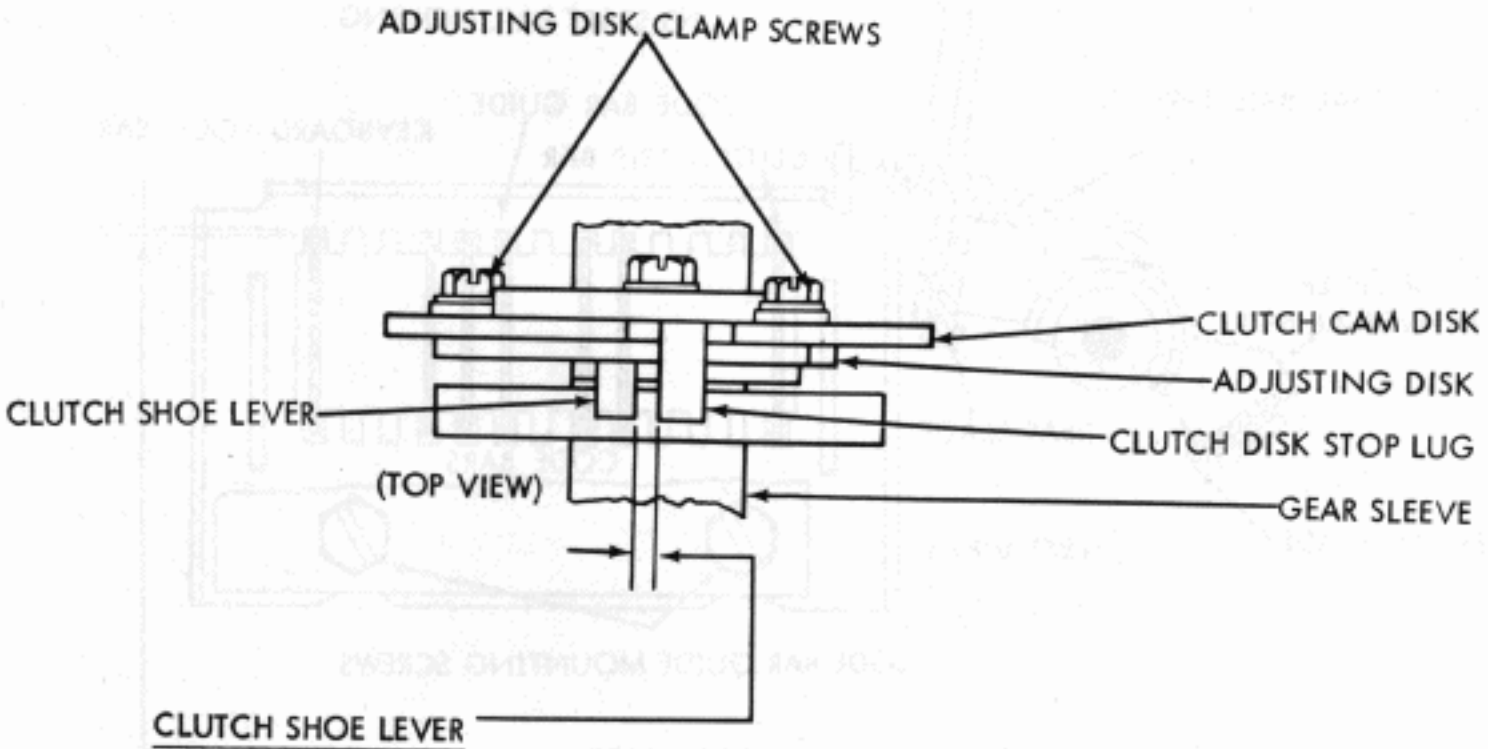

CLUTCH SHOE LEVER

REQUIREMENT

CLEARANCE WHEN CLUTCH IS DISENGAGED SHOULD BE 0.055 INCH TO 0.085 INCH LESS THAN WHEN CLUTCH IS ENGAGED.

TO CHECK

LATCH CLUTCH IN DISENGAGED POSITION AND MEASURE CLEARANCE. ROTATE GEAR UNTIL OIL HOLE IS UPWARD. ENGAGE CLUTCH AND MEASURE CLEARANCE.

TO ADJUST

LOOSEN THE TWO ADJUSTING DISK CLAMP SCREWS TO POSITION DISK.

FIGURE 1-2 KEYBOARD, SIGNAL GENERATOR CLUTCH AND GEAR MECHANISM

(B) CLUTCH STOP LEVER SPRING TENSION
REQUIREMENT
CLUTCH ENGAGED AND ROTATED 1/4 TURN.
MIN. 2 OZS.
MAX. 3 OZS.
TO START LEVER MOVING.

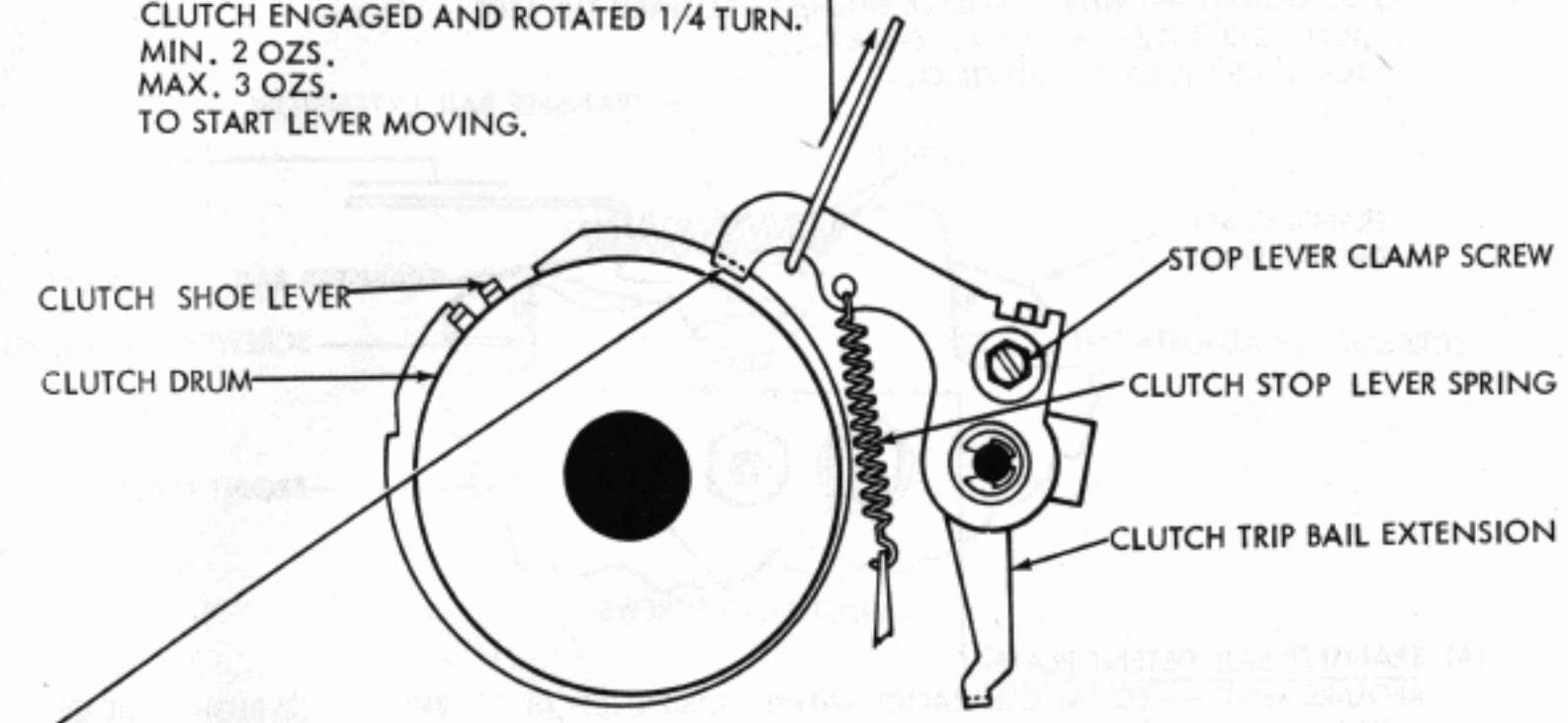

(A) CLUTCH STOP LEVER
REQUIREMENT
SHOULD FULLY ENGAGE CLUTCH SHOE LEVER
DURING ROTATION, THE LEVER SHOULD NOT TOUCH THE CLUTCH DRUM AT ANY POINT.
TO ADJUST
POSITION STOP LEVER WITH ITS CLAMP SCREW LOOSENED.

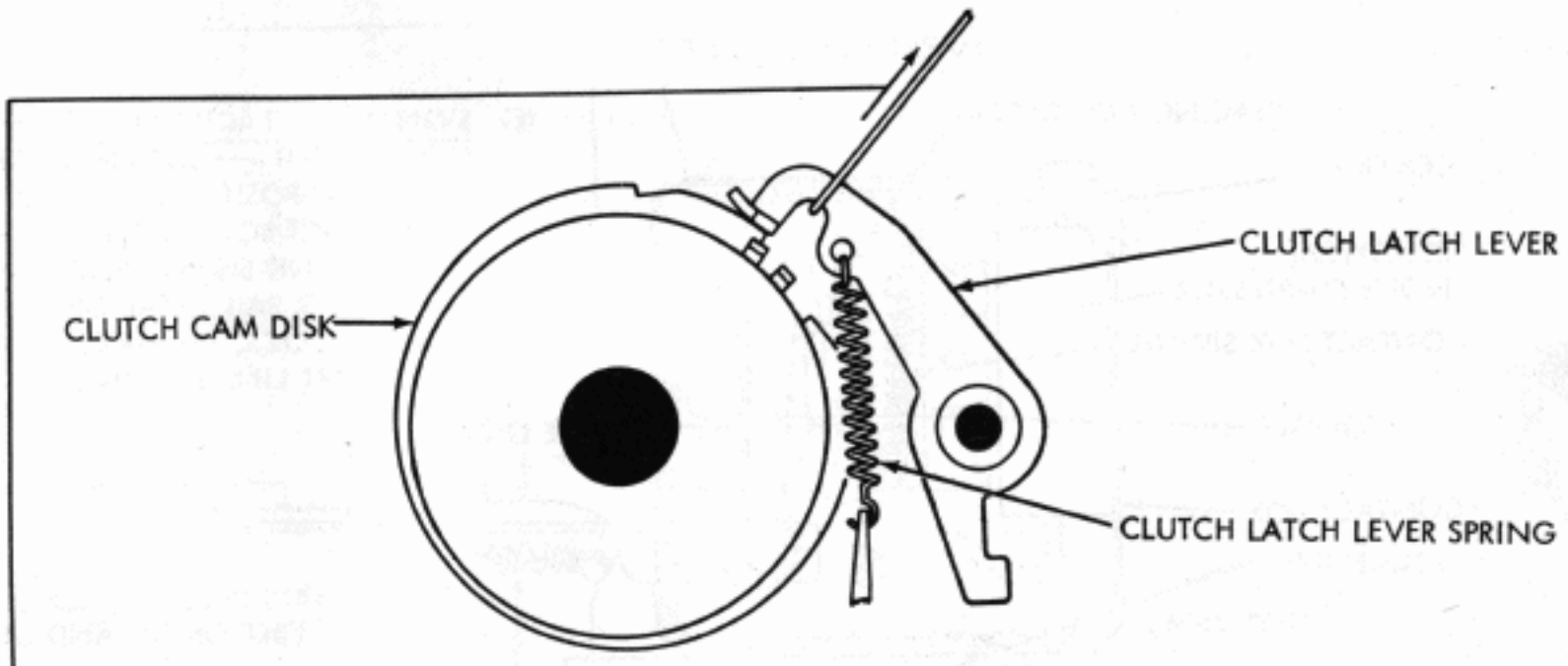

(C) CLUTCH LATCH LEVER SPRING TENSION
REQUIREMENT
CLUTCH LATCH LEVER RESTING ON THE HIGHEST POINT OF CLUTCH DISK.
MIN. 2 OZS.
MAX. 3 OZS.
TO START LATCH LEVER MOVING.

FIGURE 1-3. KEYBOARD, SIGNAL GENERATOR CLUTCH AND LEVER MECHANISM

(B) TRANSFER BAIL DETENT LATCH SPRING TENSION
REQUIREMENT --- WITH TRANSFER BAIL HELD TOWARD THE LEFT
MIN. 2-3/4 OZS. --- MAX. 4-1/4 OZS.
TO START THE LATCH MOVING.

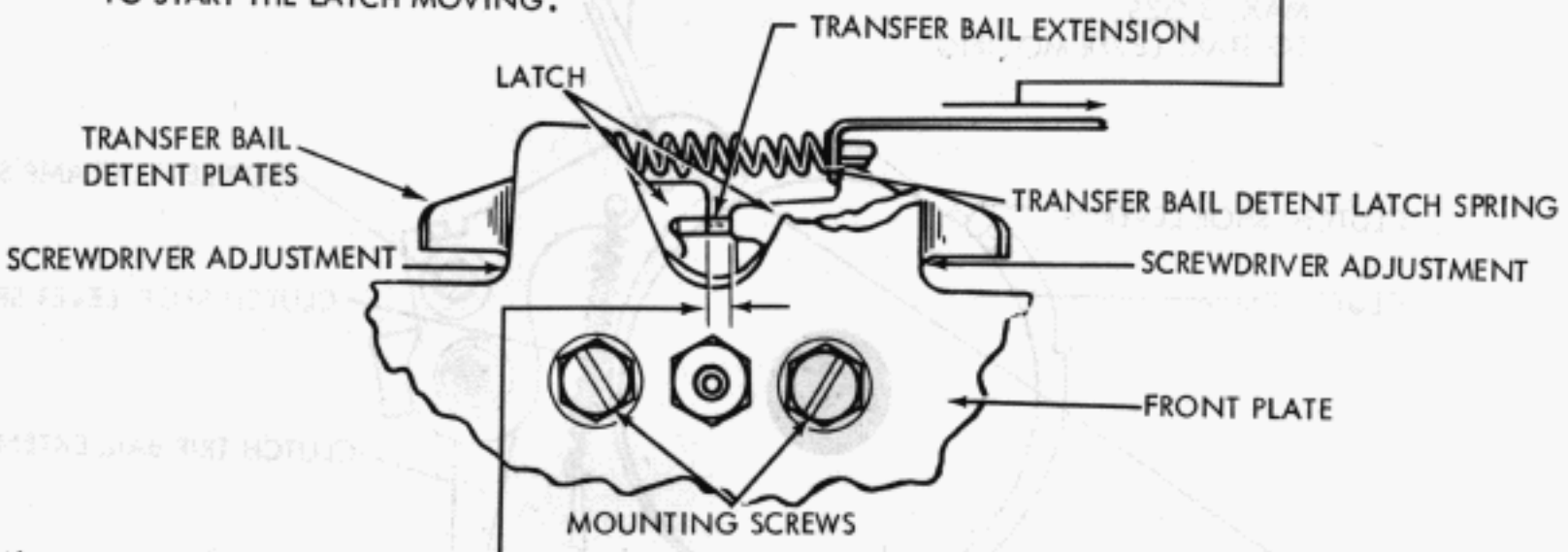

(A) TRANSFER BAIL DETENT PLATE
REQUIREMENT --- EQUAL CLEARANCE WITHIN 0.002 INCH AT (1) LEFT AND (2) RIGHT SIDE OF TRANSFER BAIL.
TO CHECK --- SELECT "Y" CHARACTER, ROTATE CAM SHAFT MANUALLY TO MOVE TRANSFER BAIL TO ITS EXTREME RIGHT AND LEFT POSITION. CHECK START PULSE AND NO. 1 PULSE ONLY.
TO ADJUST --- ROTATE DETENT PLATE RIGHT OR LEFT SCREWDRIVE ADJUSTING SLOT.

(C) SIGNAL CONTACT CLEARANCE
REQUIREMENT --- MARKING AND SPACING CONTACT GAPS SHALL BE EQUAL WITHIN 0.001 INCH
TO CHECK --- DEPRESS "Y" KEYLEVER AND ROTATE SIGNAL GENERATOR CAM SLEEVE UNTIL EACH CONTACT HAS FULLY OPENED.
TO ADJUST --- WITH CONTACT BOX MOUNTING SCREWS LOOSENED, POSITION BOX BY MEANS OF ITS ECCENTRIC.

NOTE 1.
WHERE POSSIBLE, CHECK BY MEANS OF SIGNAL CHECKING DEVICE AND EXERCISE CARE IN REFINING ADJUSTMENT TO ELIMINATE ALL BIAS FROM SIGNALS BY EQUALIZING THE CURRENT-ON AND CURRENT-OFF INTERVALS. REFER TO PAGE 108 AND 109.

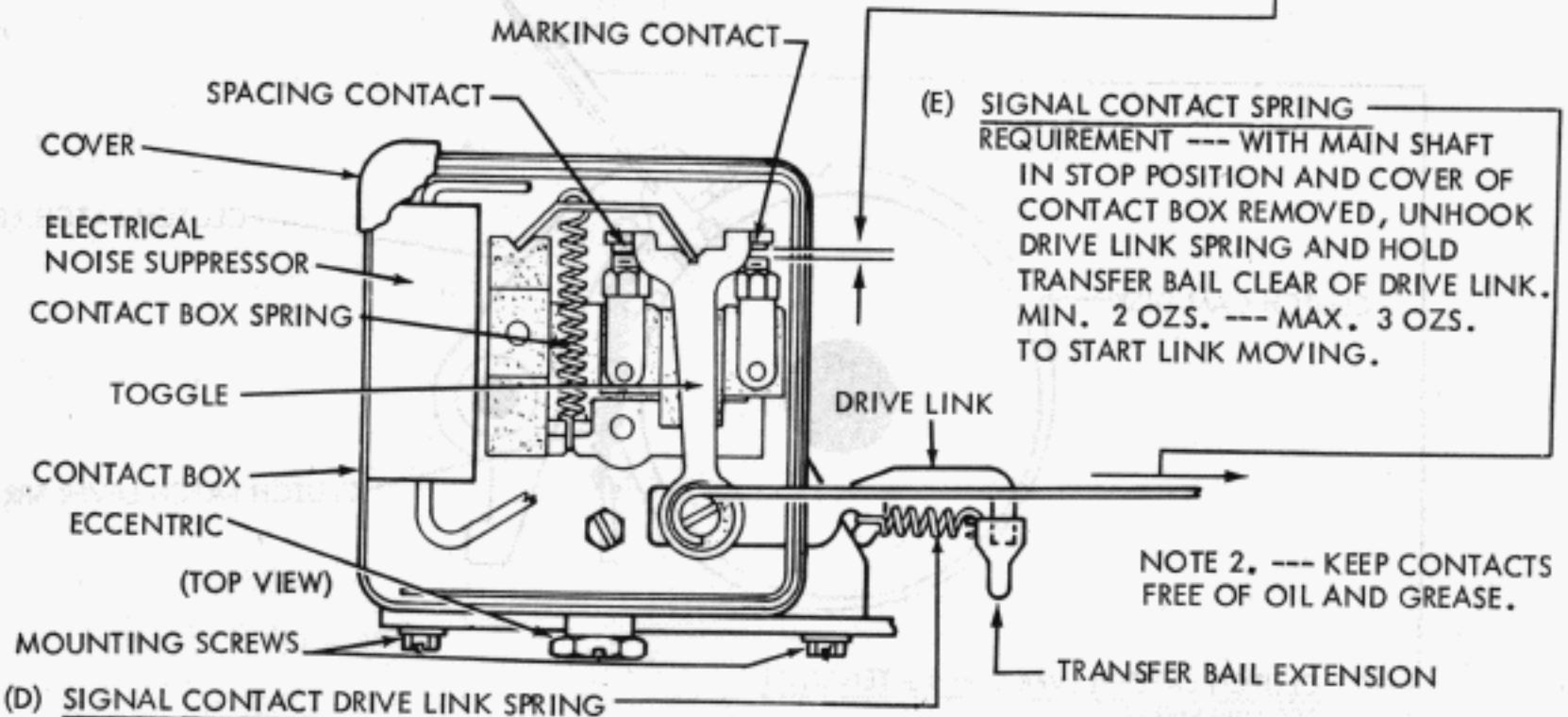

(E) SIGNAL CONTACT SPRING
REQUIREMENT --- WITH MAIN SHAFT IN STOP POSITION AND COVER OF CONTACT BOX REMOVED, UNHOOK DRIVE LINK SPRING AND HOLD TRANSFER BAIL CLEAR OF DRIVE LINK.
MIN. 2 OZS. --- MAX. 3 OZS.
TO START LINK MOVING.

NOTE 2. --- KEEP CONTACTS FREE OF OIL AND GREASE.

(D) SIGNAL CONTACT DRIVE LINK SPRING
REQUIREMENT --- WITH MAINSHAFT IN STOP POSITION AND TRANSFER BAIL DETENT LATCH SPRING UNHOOKED (SEE UPPER FIG.), MOVE LATCHES AWAY FROM TRANSFER BAIL EXTENSION. HOLD TOGGLE FIRMLY AGAINST CONTACTS.
MIN. 6 OZS. --- MAX. 9 OZS.
TO START TRANSFER BAIL EXTENSION MOVING.

FIGURE 1-4 KEYBOARD, TRANSFER BAIL AND CONTACT BOX MECHANISM

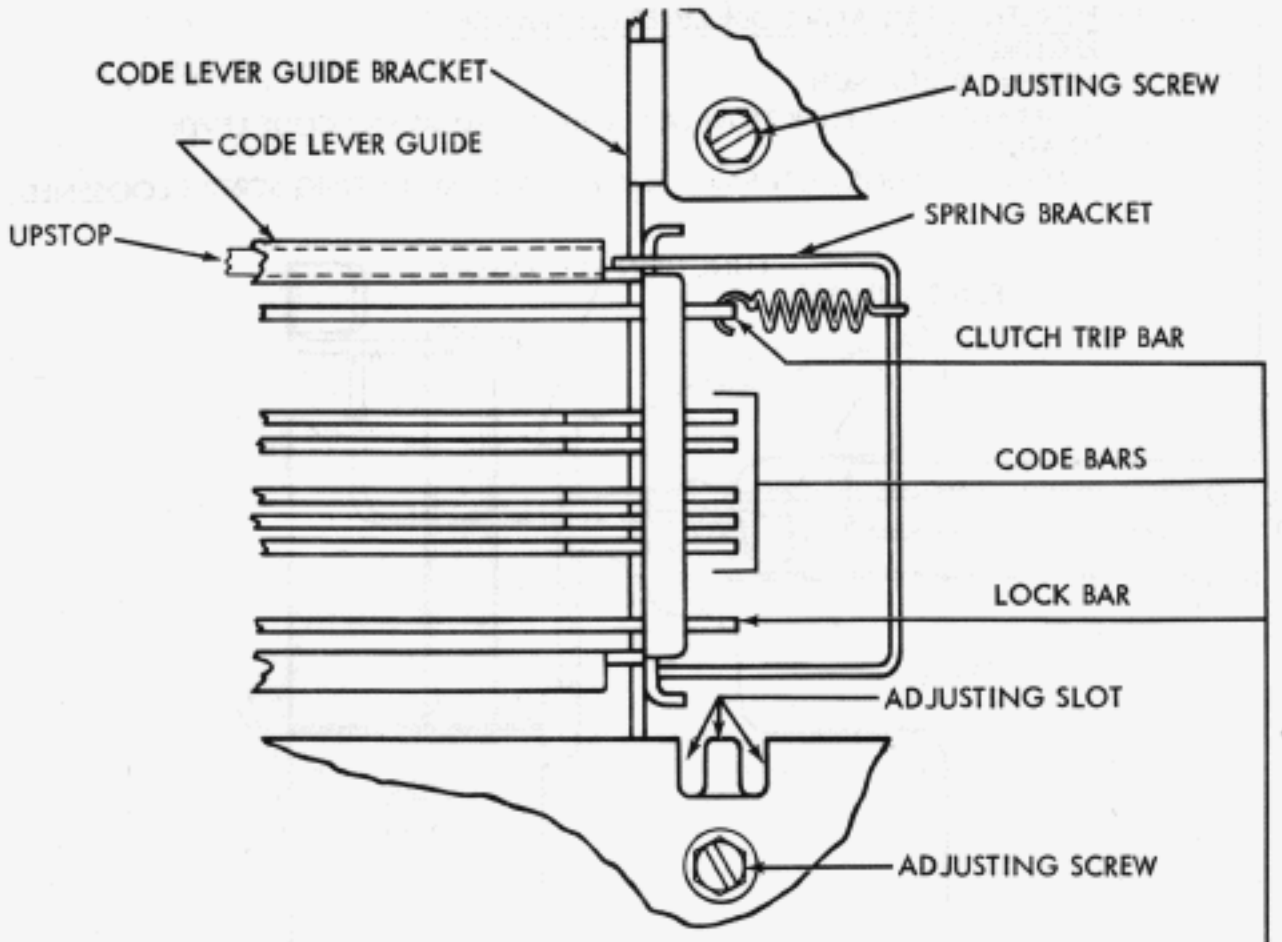

(A) CLUTCH TRIP BAR SPRING TENSION

REQUIREMENT

CLUTCH DISENGAGED, POWER OFF.
MIN. 9 OZS.
MAX. 12 OZS.
TO MOVE BAR.

(B) CODE BAR SPRING TENSION

REQUIREMENT

LETTERS KEYLEVER DEPRESSED.
MIN. 3 OZS.
MAX. 5 OZS.
TO START CODE BAR MOVING.

(C) LOCK BAR SPRING TENSION

REQUIREMENT

CLUTCH DISENGAGED. KEYBOARD LOCK KEYLEVER DEPRESSED.
MIN. 2-1/2 OZS.
MAX. 6 OZS.
TO START LOCK BAR MOVING.

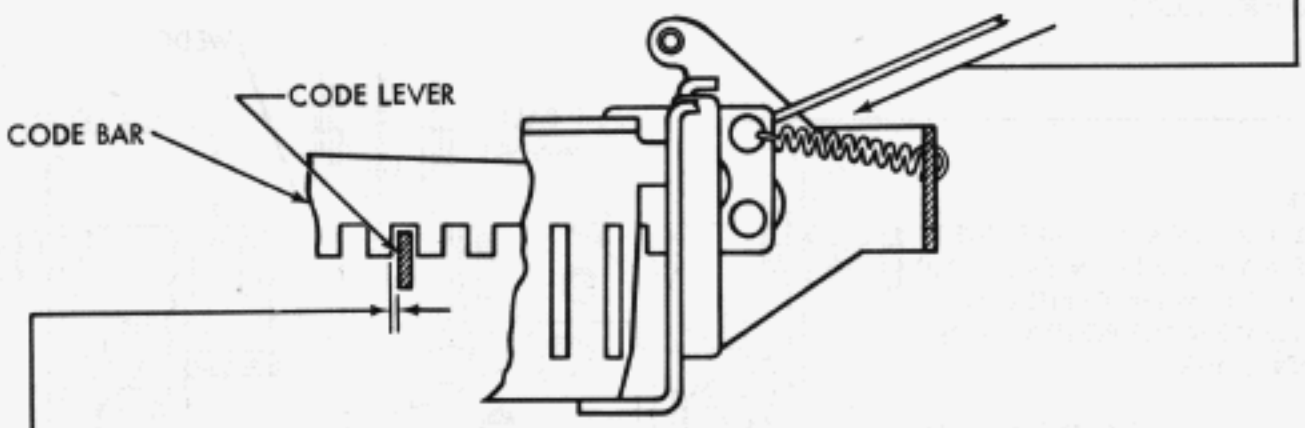

(D) CODE BAR AND CODE LEVER CLEARANCE

REQUIREMENT

CARRIAGE RETURN KEY DEPRESSED BUT NOT ENOUGH TO TRIP OFF UNIVERSAL BAIL LATCH OR CLUTCH BAR.
MIN. 0.006 INCH.
MAX. 0.017 INCH.
MEASURED AT CODE BAR #3.

TO ADJUST

POSITION GUIDE BY ADJUSTING SLOT WITH (4) MOUNTING SCREWS LOOSENED.

FIGURE 1-5 KEYBOARD, CODE BAR AND CODE LEVER MECHANISM

(A) FUNCTION BAIL AND CODE LEVER CLEARANCE

REQUIREMENT

MIN. 0.015 INCH

BETWEEN ANY FUNCTION BAIL AND ITS ADJACENT CODE LEVER

TO ADJUST

POSITION FUNCTION BAIL ASSEMBLY WITH MOUNTING SCREWS LOOSENED.

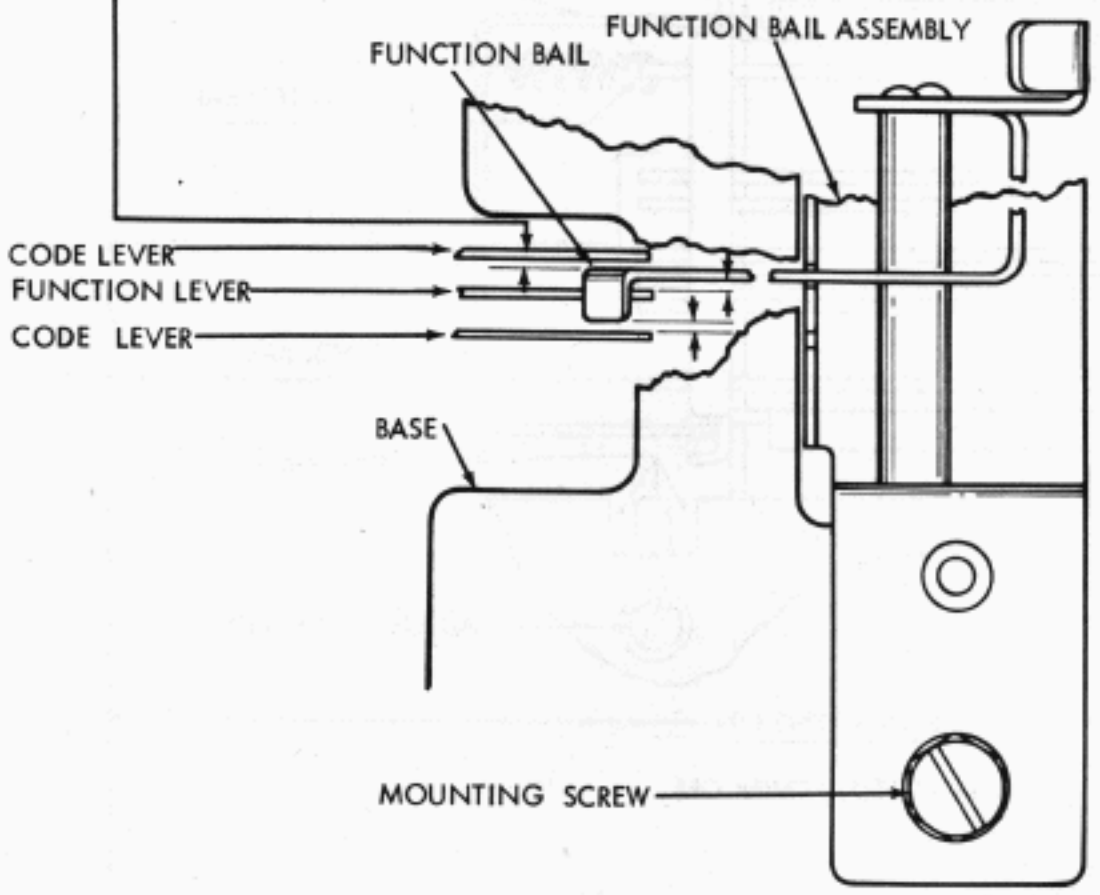

NOTE: THIS ADJUSTMENT SHOULD NOT BE MADE UNLESS THE LOCK BALL CHANNEL HAS BEEN DISASSEMBLED.

(B) LOCK BALL CHANNEL

REQUIREMENT

THERE SHOULD BE SOME TO 0.006 INCH CLEARANCE BETWEEN END OF LOCK BALL CHANNEL AND ADJUSTING SCREW WHEN MOST OF THE CODE LEVERS ARE CENTRALLY LOCATED IN THE LOCK BALL CHANNEL SLOTS.

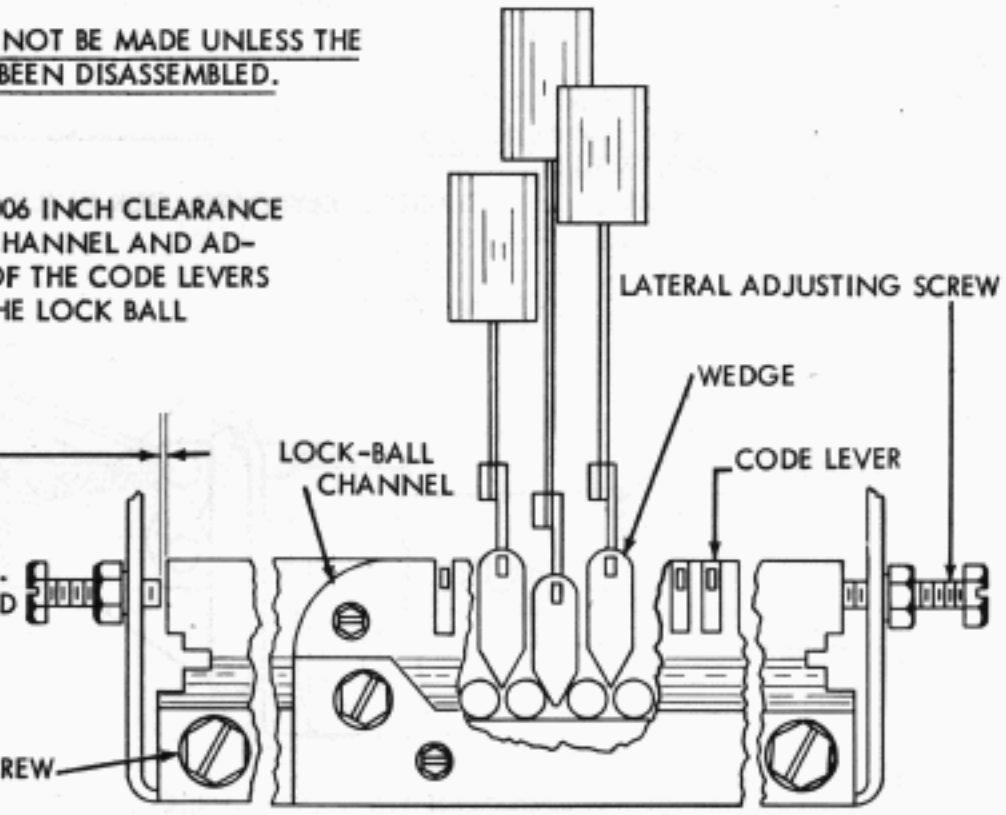

TO CHECK

REMOVE THE LOCK BALL RETAINER. REMOVE A WEDGE FROM EACH END AND ONE FROM THE CENTER IN ORDER TO VIEW THE POSITION OF THE CODE LEVER.

TO ADJUST

LOOSEN THE LOCK BALL CHANNEL MOUNTING SCREWS. BACK OFF LATERAL ADJUSTING SCREWS AND POSITION CHANNEL. TURN ONE ADJUSTING SCREW IN AGAINST THE END OF THE CHANNEL AND LOCK IT. TURN THE OTHER ADJUSTING SCREW IN TO THE END OF THE CHANNEL AND BACK IT OFF 1/4 TURN. LOCK THE SCREW. REPLACE THE WEDGES AND CHECK THEIR POSITION WITH RESPECT TO THE BALLS. PULL CHANNEL ASSEMBLY DOWNWARD UNTIL ALL CODE LEVERS STRIKE THEIR UPSTOP WITHOUT WEDGES JUMPING OUT OF POSITION. REPLACE LOCK-BALL RETAINER. BACK OFF BALL END PLAY ADJUSTING SCREW.

FIGURE 1-6 KEYBOARD, FUNCTION BAIL AND LOCK BALL TRACK MECHANISMS

(A) CODE BAR BAIL LATCH SPRING TENSION
REQUIREMENT
MIN. 1/2 OZS.
MAX. 1 1/2 OZS.
TO START CODE BAR BAIL LATCH MOVING

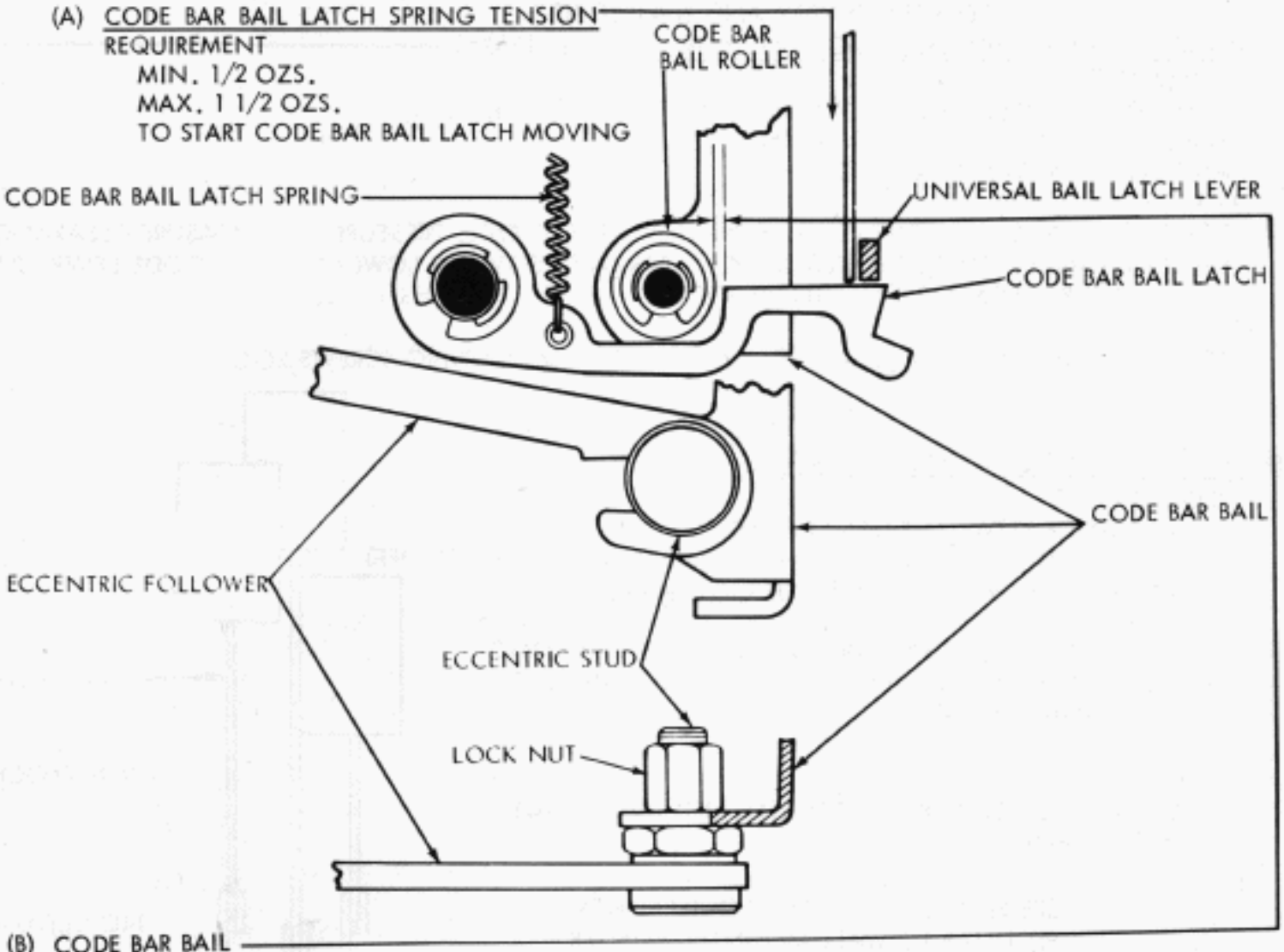

(B) CODE BAR BAIL
REQUIREMENT
CAM ECCENTRIC AND ARM WHICH HOLD THE BAIL IN EXTREME RESET POSITION TO THE LEFT.
MIN. 0.004 INCH
MAX. 0.012 INCH
MIN. SOME
MAX. 0.006 INCH
NEW STYLE
(1-1/4 INCH CODE BAR BAIL)
BETWEEN CODE BAR BAIL ROLLER AND CODE BAR BAIL LATCH
TO ADJUST
ADJUST ECCENTRIC STUD WITH LOCK NUT LOOSENED.

(C) NON-REPEAT LEVER SPRING TENSION
REQUIREMENT
ANY KEYLEVER DEPRESSED
MIN. 2 OZS.
MAX. 3-1/4 OZS.
TO START NON-REPEAT LEVER MOVING DOWNWARD.

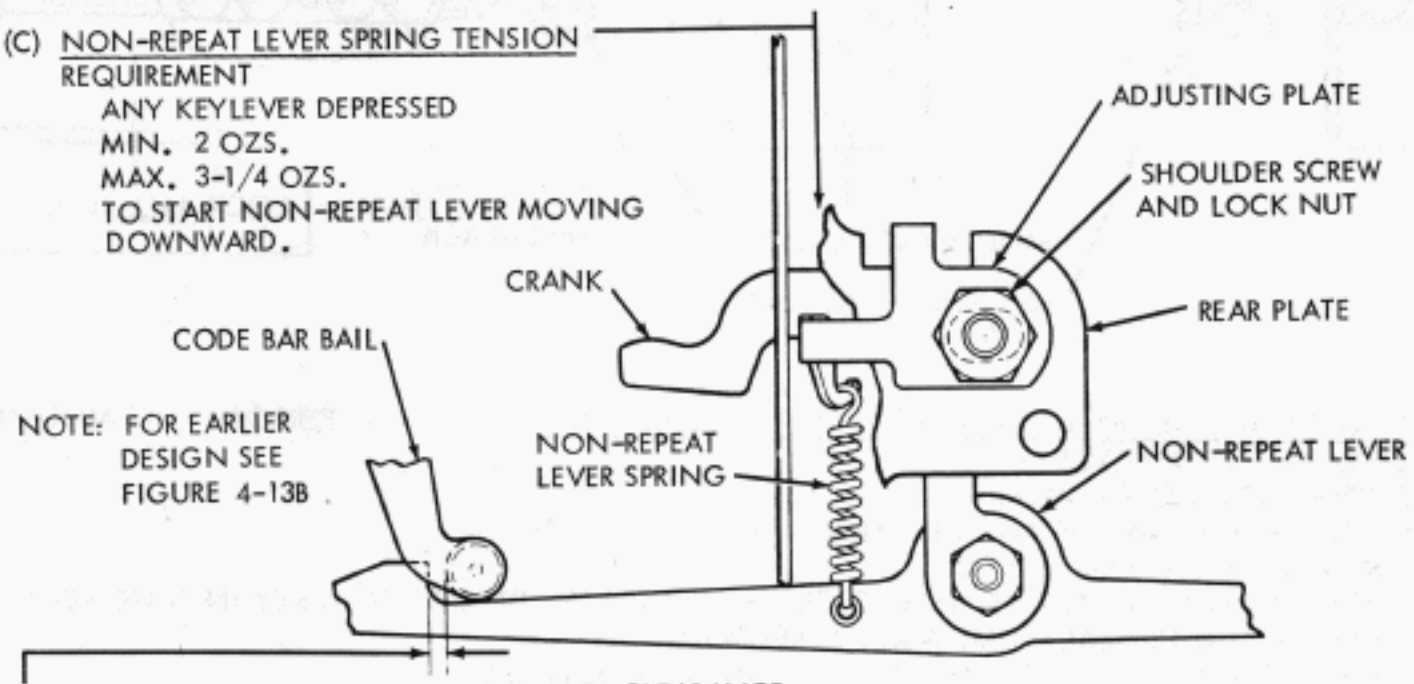

(D) CODE BAR BAIL AND NON-REPEAT LEVER CLEARANCE
REQUIREMENT
MECHANISM IN INITIAL TRIP-OFF POSITION, ANY KEY DEPRESSED, NO POWER.
MIN. 0.010 INCH
MAX. 0.020 INCH
BETWEEN ROLLER OF CODE BAR BAIL AND NON-REPEAT LEVER PICK-UP STEP.
TO ADJUST
LOOSEN LOCK NUT AND SHOULDER SCREW AND MOVE MECHANISM LEFT OR RIGHT.

(FRONT VIEW)

FIGURE 1-7. KEYBOARD, CODE BAR BAIL AND NON-REPEAT LEVER MECHANISMS.

NOTE: REMOVE KEYBOARD HOOD IN ORDER TO MAKE THIS ADJUSTMENT.
SEE DISASSEMBLY AND REASSEMBLY

(A) BALL WEDGELOCK AND BALL TRACK CLEARANCE (PRELIMINARY)

REQUIREMENT

CLEARANCE BETWEEN TIP OF WEDGE AND THE BALL TRACK
MIN. 0.005 INCH --- MAX. 0.015 INCH
AND EQUAL WITHIN 0.005 INCH.

TO CHECK

DEPRESS "Q" AND "P" KEYLEVER ALTERNATELY WITH 32 OZS. PRESSURE AND MEASURE CLEARANCE IN EACH INSTANCE. THERE SHOULD BE NO CLEARANCE BETWEEN LOWER EDGE OF CODE LEVER EXTEN - SIONS AND BOTTOM OF SLOTS IN WEDGES.

TO ADJUST

POSITION BALL TRACK UP OR DOWN WITH THE TWO MOUNTING SCREWS LOOSENED.

(B) LOCK BALL END PLAY (PRELIMINARY)

REQUIREMENT

CLEARANCE BETWEEN BALLS SHOULD BE MINIMUM.

TO CHECK (WITH BALL END PLAY ADJUSTMENT SCREW BACKED OFF)

DEPRESS "CAR. RET." KEY WITH 32 OZS. PRESSURE.

TO ADJUST

MAINTAIN 32 OZS. PRESSURE AND ROTATE ADJUSTING SCREW WITH FINGERS UNTIL A SLIGHT RESISTANCE IS FELT. TIGHTEN LOCK NUT.

NOTE: A TOTAL OF 43 BALLS ARE REQUIRED IN THE BALL TRACK ASSEMBLY.

SEE FIGURE 1-16A FOR REQUIREMENTS PECULIAR TO WALL MOUNTED PRINTER

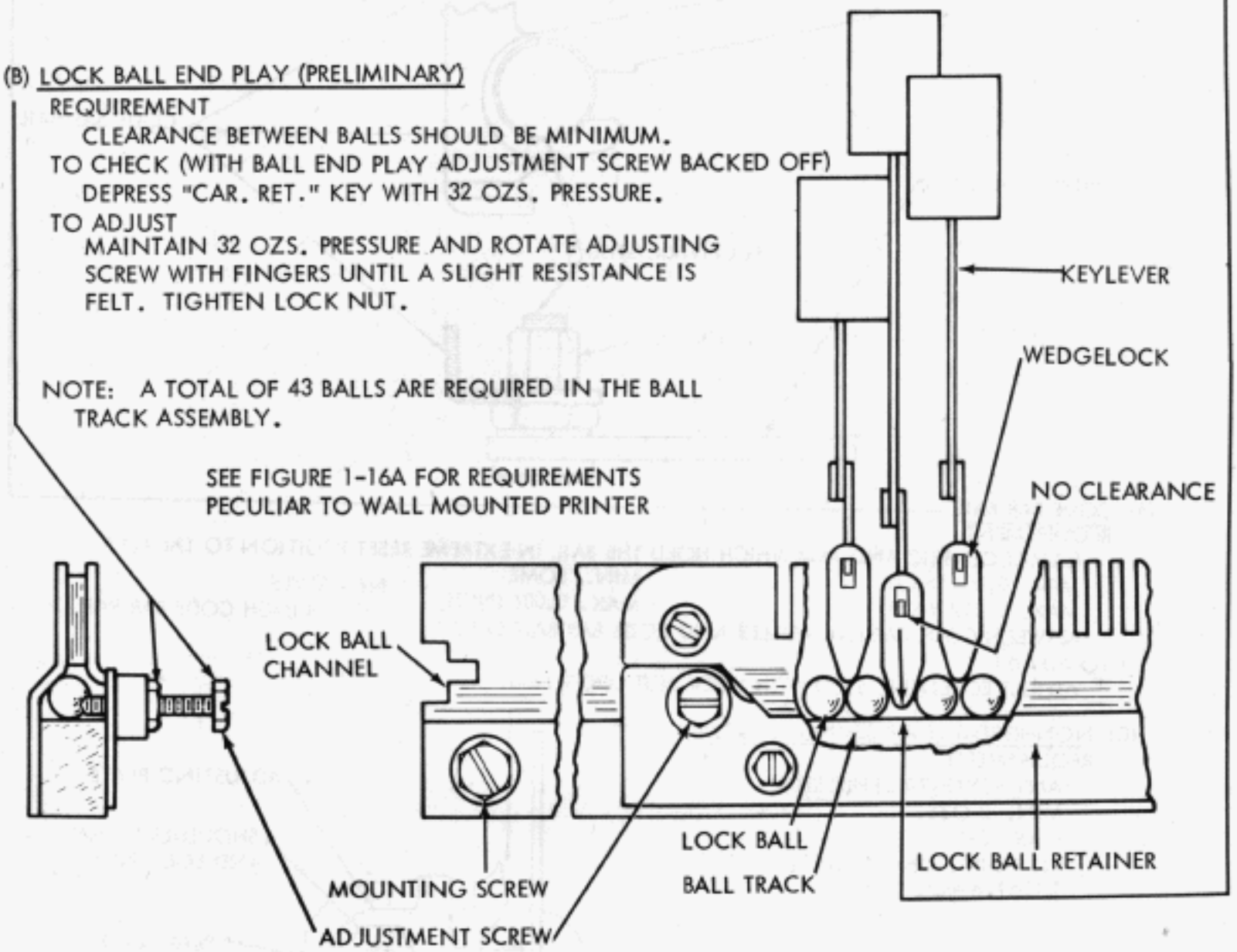

(F) BALL-LOCK-WEDGE, BALL END-PLAY AND UNIVERSAL BAIL LATCH(FINAL) PERFORM THIS ADJUSTMENT FOLLOWING (E) ON PAGE 1-11

REQUIREMENT (UNDER POWER)

1. TRIP-OFF PRESSURE OF ANY CENTER ROW KEY SHOULD BE MIN. 2 OZS. --- MAX. 5 OZS.
2. APPLY 5-1/2 OZS. PRESSURE PERPENDICULAR TO "A" KEY, DEPRESS EACH KEY IN THIRD ROW. THE "A" KEY SHOULD TRIP EACH TIME A KEY IS RELEASED.
3. REPEAT 2 WITH THE 5-1/2 OZS. PRESSURE ON "CAR. RET." KEY.
4. THE CLUTCH SHOULD NOT TRIP WHEN TWO KEYS ARE DEPRESSED SIMULTANEOUSLY.
5. APPLY 4-1/4 OZS. TO "SPACE BAR," DEPRESS "CAR. RET." KEY AND LIFT FINGER FROM KEY HORI- ZONTALLY. THE "SPACE BAR" SHOULD TRIP EACH TIME "CAR. RET." IS RELEASED.
   NOTE --- IF UNIT IS EQUIPPED FOR REPEAT-SPACE OPERATION, DISREGARD MULTIPLE SPACE OPER- ATIONS.

TO ADJUST

IF NECESSARY, REFINE BALL WEDGE LOCK AND BALL TRACK CLEARANCE (PRELIMINARY), LOCK BALL END PLAY (PRELIMINARY), UNIVERSAL BAIL LATCH LEVER (PRELIMINARY) AND UNIVERSAL BAIL EXTENSION.

FIGURE 1-8. KEYBOARD, WEDGELOCK AND BALL TRACK MECHANISM

(B) UNIVERSAL BAIL LATCH SPRING TENSION
REQUIREMENT
CLUTCH DISENGAGED, UNIVERSAL BAIL HELD AWAY FROM LATCH LEVER. NON-REPEAT LEVER BELL CRANK HELD DOWN AGAINST ITS STOP POST.
MIN. 7 1/2 OZS.
MAX. 11 OZS.
TO START LATCH LEVER MOVING.

(A) UNIVERSAL BAIL LATCH LEVER (PRELIMINARY)
NOTE: ON KEYBOARDS EQUIPPED FOR REPEAT SPACE OPERATION, UNHOOK THE SPRING FROM THE PLATE WITH STUD - SEE FIGURE 2-1.
REQUIREMENT
CLEARANCE BETWEEN UNIVERSAL BAIL LATCH LEVER AND POST ON UNIVERSAL BAIL EXTENSION.
MIN. 0.015 INCH
MAX. 0.025 INCH
TO CHECK
DEPRESS SPACE BAR SLOWLY WITH 32 OZS. PRESSURE. MANUALLY ROTATE UNIVERSAL BAIL BACKWARDS AND RELEASE QUICKLY.
TO ADJUST
ROTATE ECCENTRIC. KEEP HIGH PART OF ECCENTRIC UP.

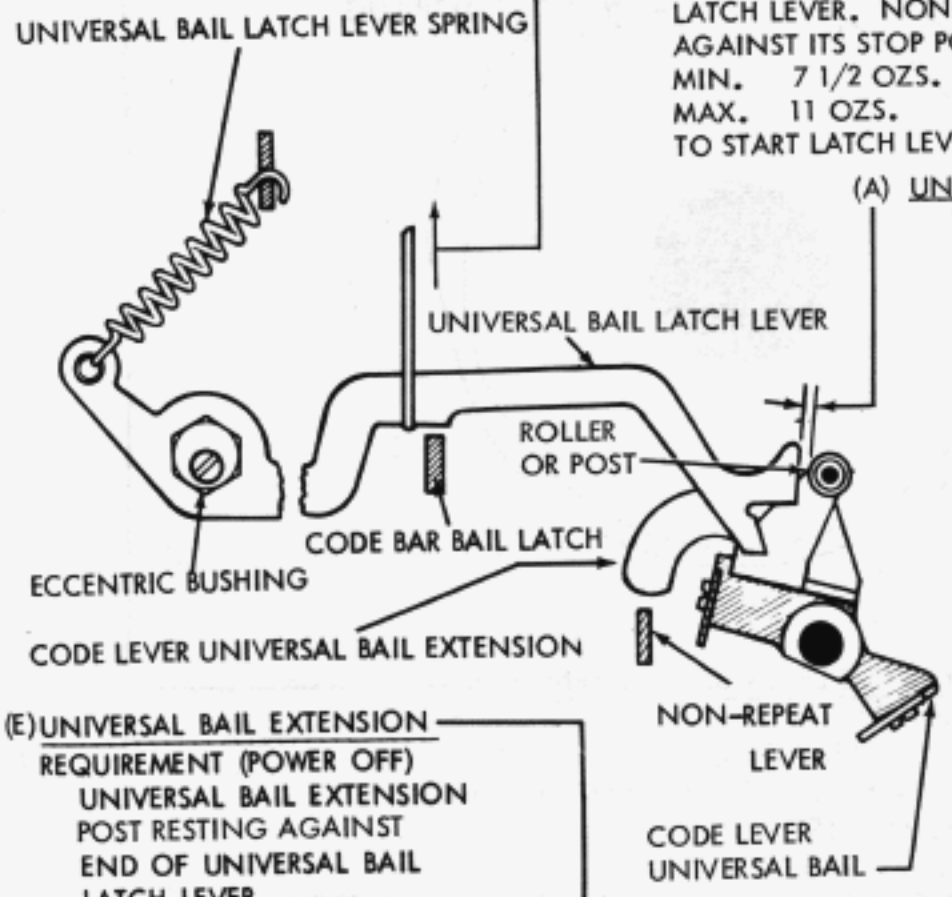

(E) UNIVERSAL BAIL EXTENSION
REQUIREMENT (POWER OFF)
UNIVERSAL BAIL EXTENSION POST RESTING AGAINST END OF UNIVERSAL BAIL LATCH LEVER
MIN. 0.060 INCH
MAX. 0.080 INCH
BETWEEN EXTENSION AND NON-REPEAT LEVER
TO CHECK
DEPRESS LETTERS KEYLEVER AND RELEASE IT. CHECK CLEARANCE.
TO ADJUST
POSITION THE EXTENSION WITH ITS TWO CLAMP SCREWS LOOSENED.

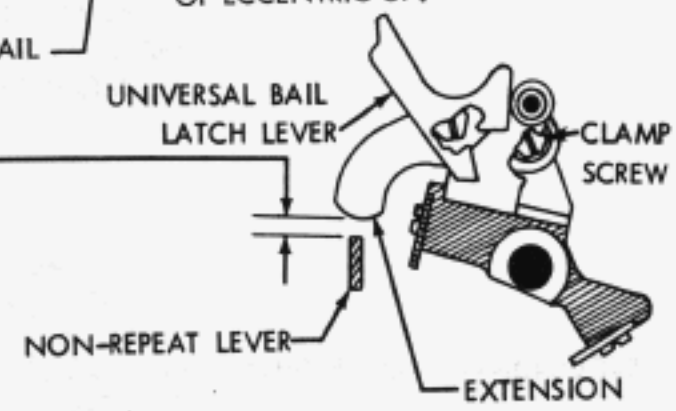

(F) BALL-LOCK-WEDGE, BALL END-PLAY AND UNIVERSAL BAIL LATCH (FINAL)
SEE FIGURE 1-8.

(D) PLUNGER SPRING TENSION
REQUIREMENT
WITH PLUNGER OPERATING KEYLEVER DEPRESSED.
MIN. 2 OZS.
MAX. 5 OZS.
TO START PLUNGER MOVING DOWNWARD.

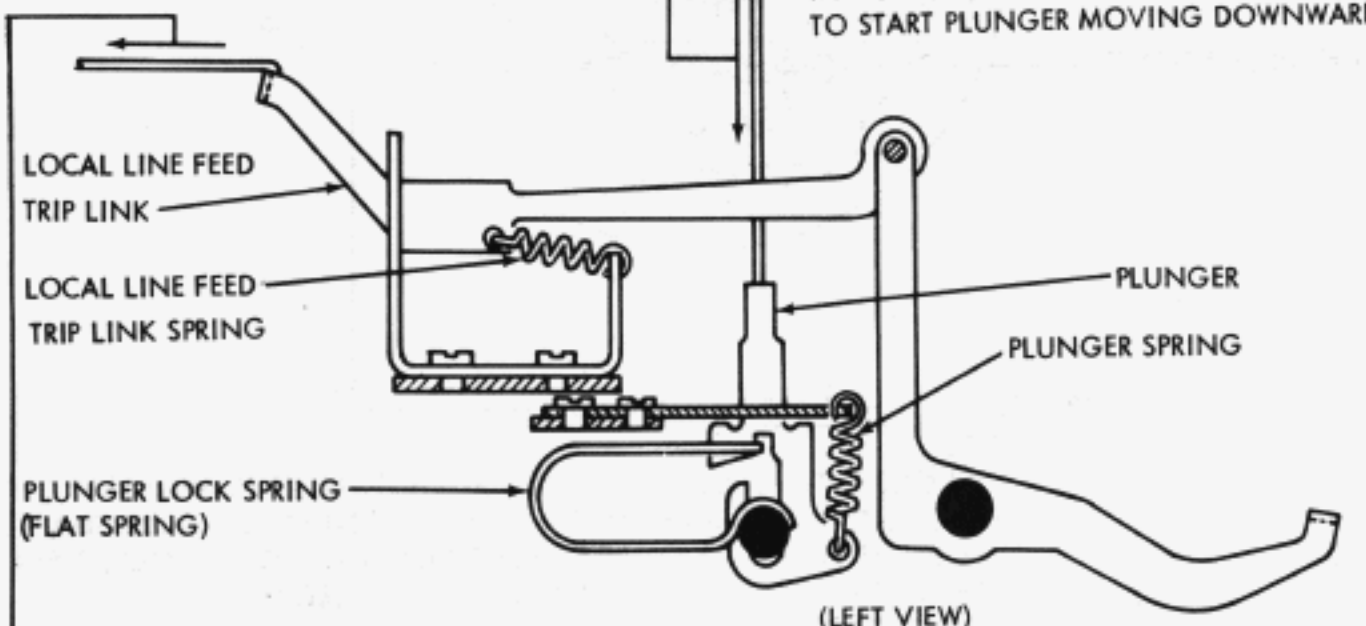

(LEFT VIEW)

(C) LOCAL LINE FEED TRIP LINK SPRING TENSION
REQUIREMENT
MIN. 4 OZS.
MAX. 10 OZS.
TO START LINK MOVING.

FIGURE 1-9. KEYBOARD, UNIVERSAL BAIL LATCH LEVER AND LOCAL LINE FEED TRIP LINK MECHANISMS

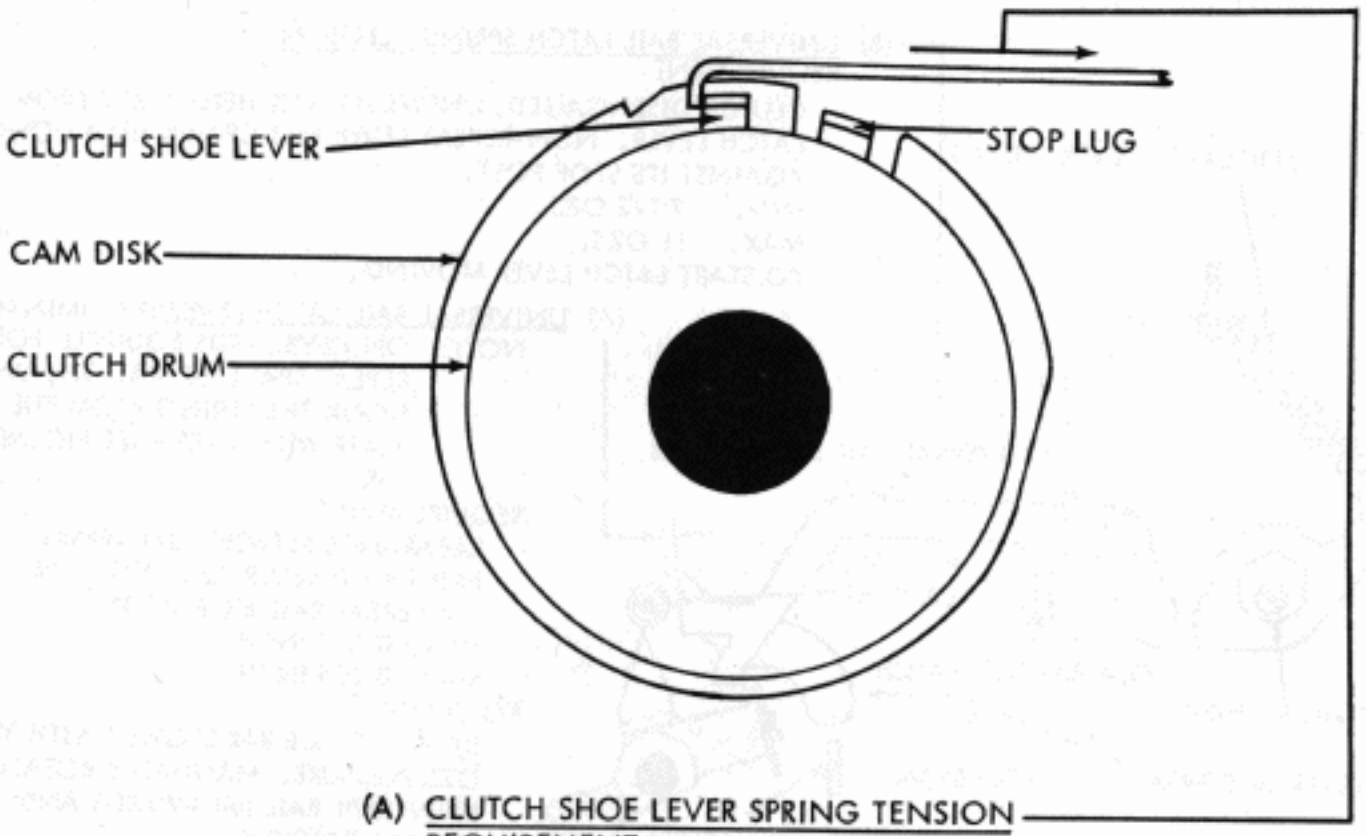

(A) CLUTCH SHOE LEVER SPRING TENSION

REQUIREMENT

CLUTCH ENGAGED.
CAM DISK HELD TO PREVENT TURNING.
MIN. 15 OZS.
MAX. 20 OZS.
TO MOVE SHOE LEVER IN CONTACT WITH STOP LUG.

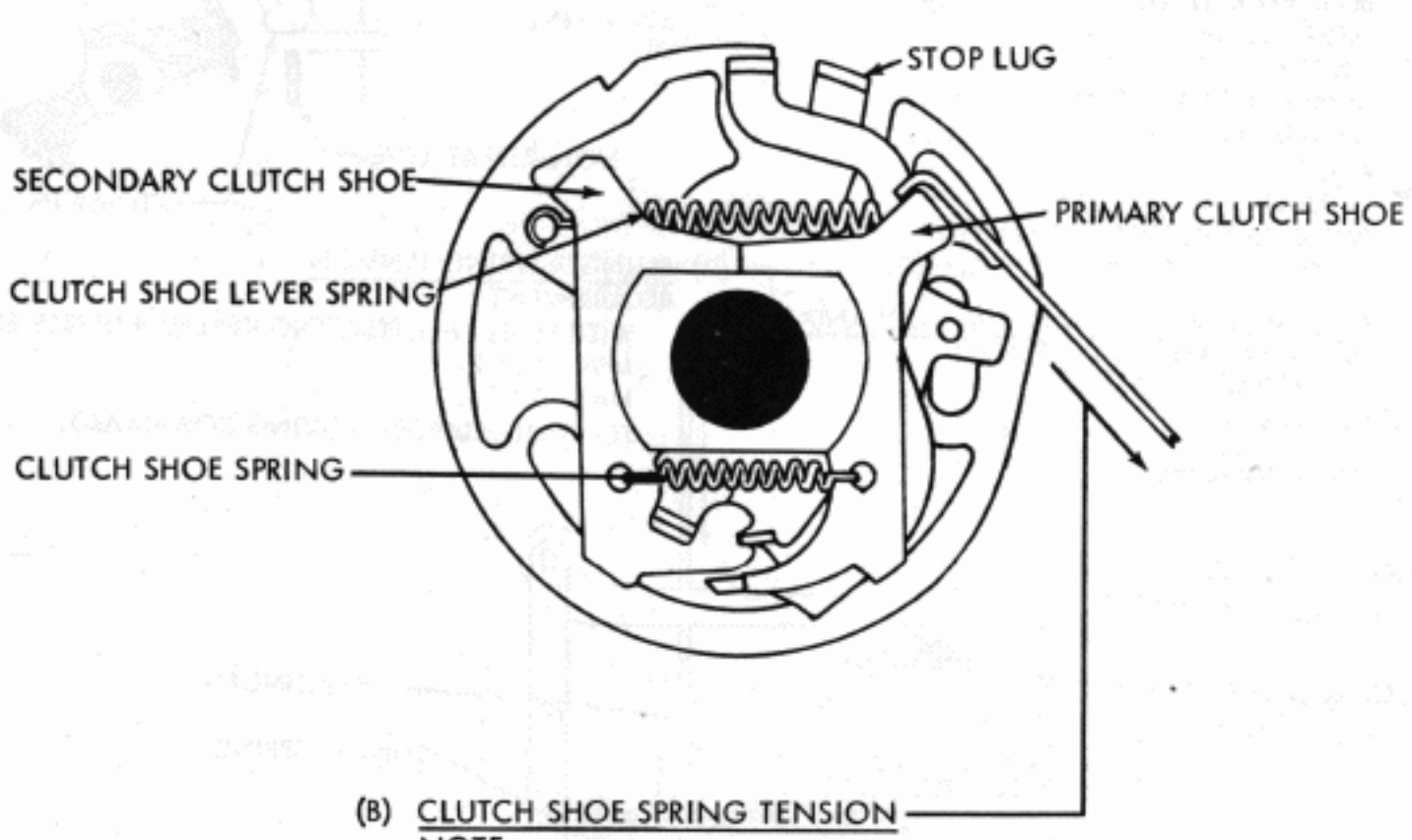

(B) CLUTCH SHOE SPRING TENSION

NOTE

IN ORDER TO CHECK THIS SPRING TENSION, IT IS NECESSARY TO REMOVE THE CLUTCH FROM THE MAIN SIGNAL GENERATOR DRIVE SHAFT. THEREFORE, IT SHOULD NOT BE CHECKED UNLESS THERE IS GOOD REASON TO BELIEVE THAT IT DOES NOT MEET ITS REQUIREMENT.

REQUIREMENT

CLUTCH DRUM REMOVED.
MIN. 3 OZS.
MAX. 5 OZS.
TO START PRIMARY SHOE MOVING AWAY FROM SECONDARY SHOE AT POINT OF CONTACT.

FIGURE 1-10. KEYBOARD, SIGNAL GENERATOR CLUTCH MECHANISM

NOTE
NOT APPLICABLE TO WALL MOUNTED PRINTER
REFER TO FIGURE 1-16B

(2) REQUIREMENT
THERE SHOULD BE A BARELY PRECEPTIBLE AMOUNT OF BACKLASH BETWEEN THE INTERMEDIATE DRIVING GEAR AND THE INTERMEDIATE DRIVEN GEAR AT THE POINT WHERE THE BACKLASH IS THE LEAST.
TO ADJUST
RAISE OR LOWER THE FRONT END OF THE INTERMEDIATE GEAR BRACKET BY MEANS OF THE FILLISTER HEAD ADJUSTING AND CLAMPING SCREWS LOCATED AT THE FRONT END OF THE BRACKET. REFINE REQUIREMENTS IF NECESSARY.

INTERMEDIATE GEAR BRACKET
(1) REQUIREMENT
THERE SHOULD BE A BARELY PERCEPTIBLE AMOUNT OF BACKLASH BETWEEN THE TYPING UNIT DRIVEN GEAR AND THE TYPING UNIT DRIVING GEAR AT THE POINT WHERE BACKLASH IS THE LEAST.
TO ADJUST
POSITION THE COMPLETE INTERMEDIATE GEAR MECHANISM BRACKET BY UTILIZING THE ADJUSTING SLOTS WITH THE THREE HEXAGON HEAD SCREWS LOOSENED. ALIGN THE GEARS AT THIS TIME.

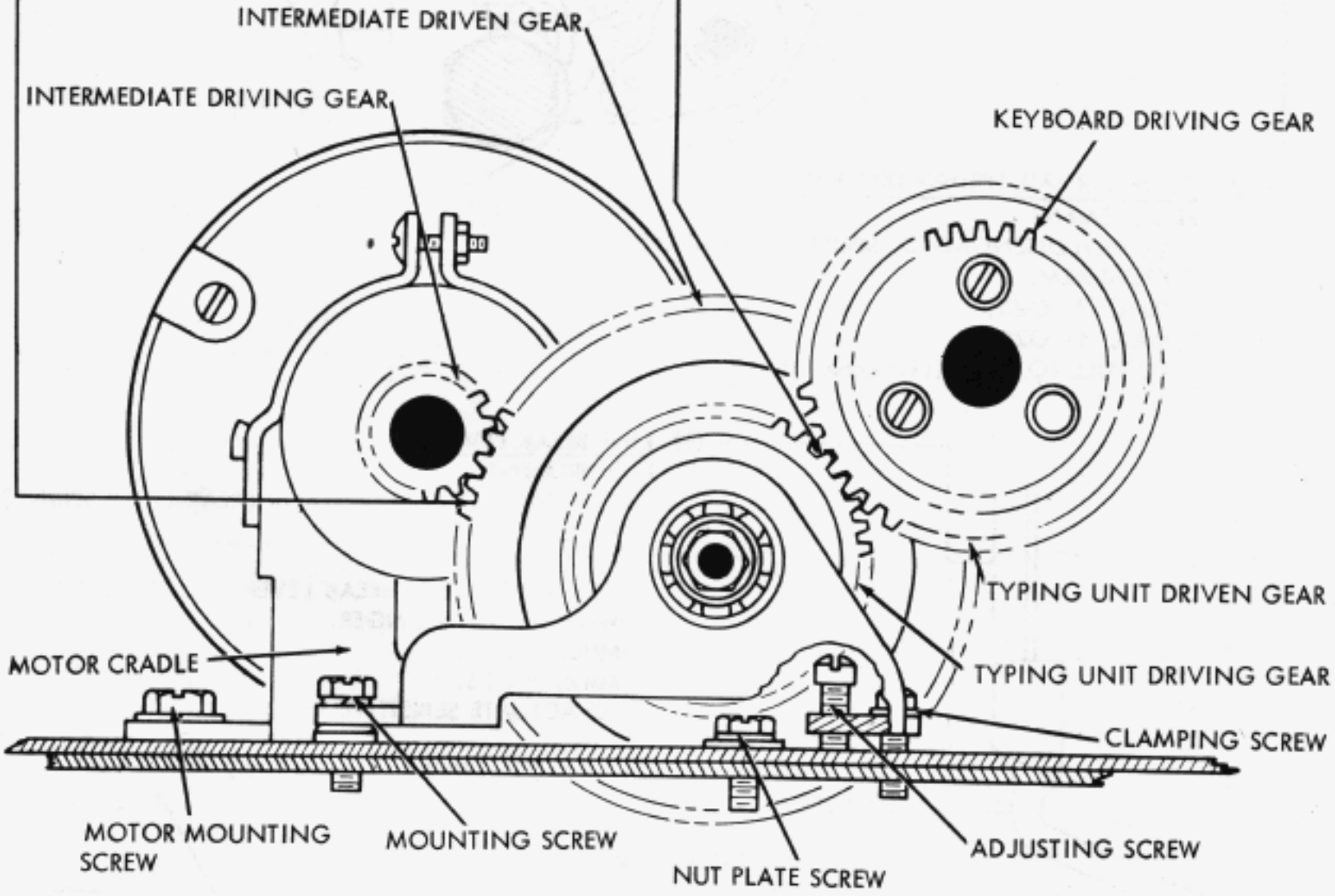

FIGURE 1-11 KEYBOARD OR BASE, MOTOR AND TYPING UNIT GEARING, LEFT SIDE VIEW

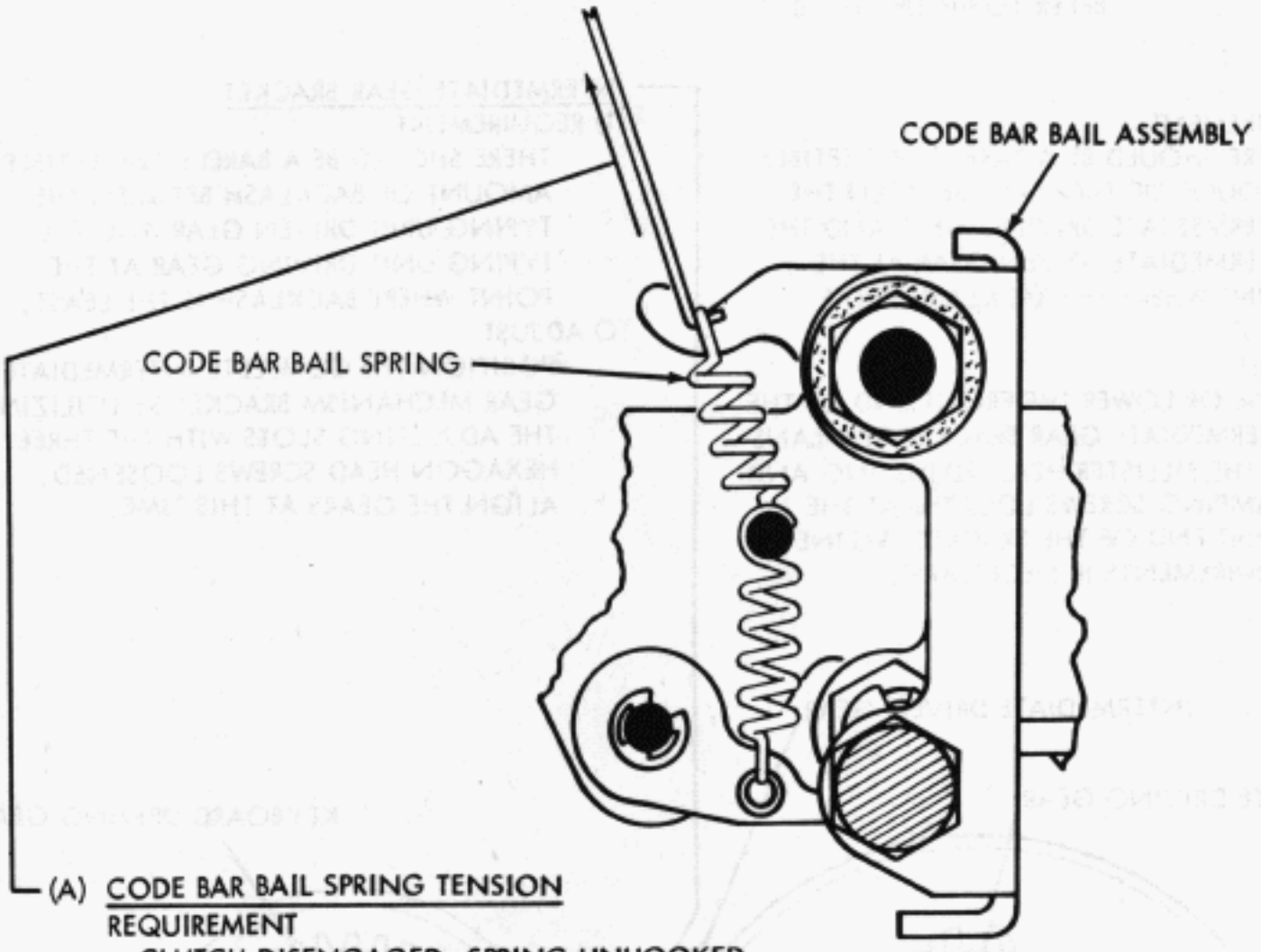

(A) CODE BAR BAIL SPRING TENSION
REQUIREMENT
CLUTCH DISENGAGED. SPRING UNHOOKED FROM ARM.
MIN. 9 OZS.
MAX. 11 OZS.
TO PULL TO INSTALLED LENGTH.

(B) LINE BREAK LEVER SPRING TENSION
REQUIREMENT
(COMBINED CODE LEVER AND BREAK LEVER SPRING)
MIN. 3 OZS.
MAX. 4 OZS.
TO MOVE SWITCH BREAK LEVER IN CONTACT WITH SWITCH PLUNGER.
MIN. 6 OZS.
MAX. 8 OZS.
TO ACTUATE SENSITIVE SWITCH

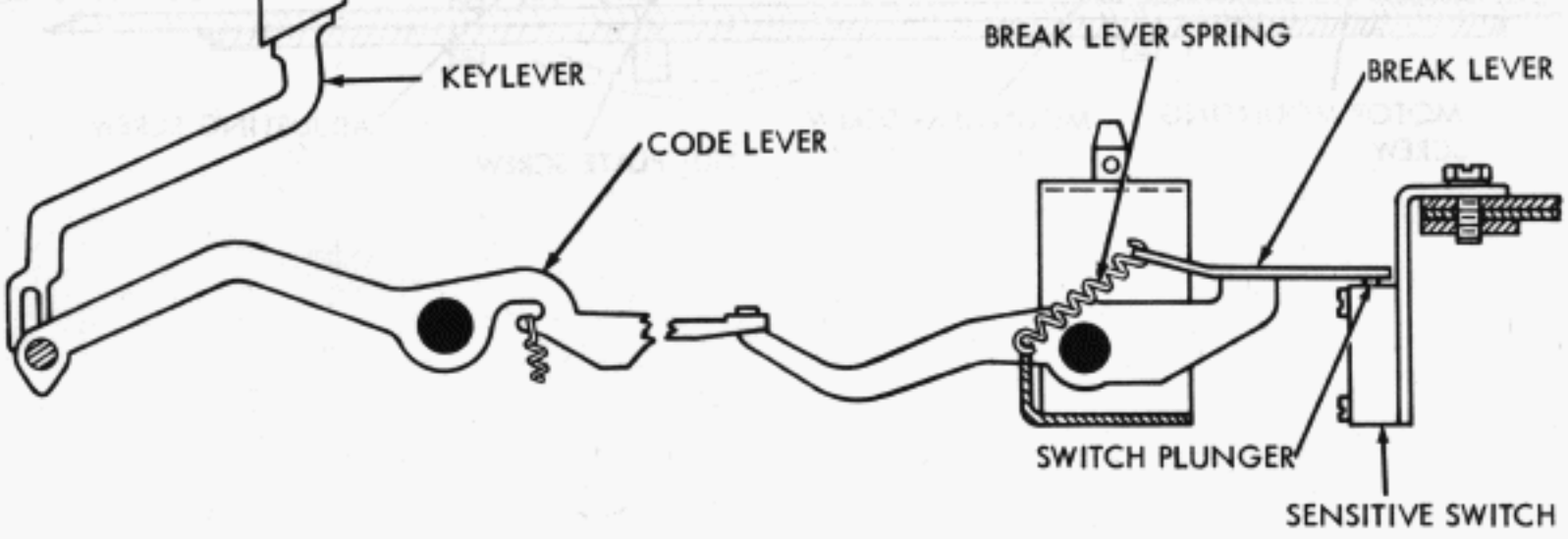

FIGURE 1-12. KEYBOARD, CODE BAR BAIL AND LINE BREAK LEVER

(A) CODE LEVER SPRING TENSION
(1)REQUIREMENT
MIN. 1 OZ.
MAX. 2 OZS.
TO START CODE LEVER MOVING DOWNWARD.
(2)REQUIREMENT
POWER ON.
GENERATOR CLUTCH DISENGAGED.
MIN. 3 OZS.
MAX. 5 OZS.
TO OPERATE KEYLEVER.

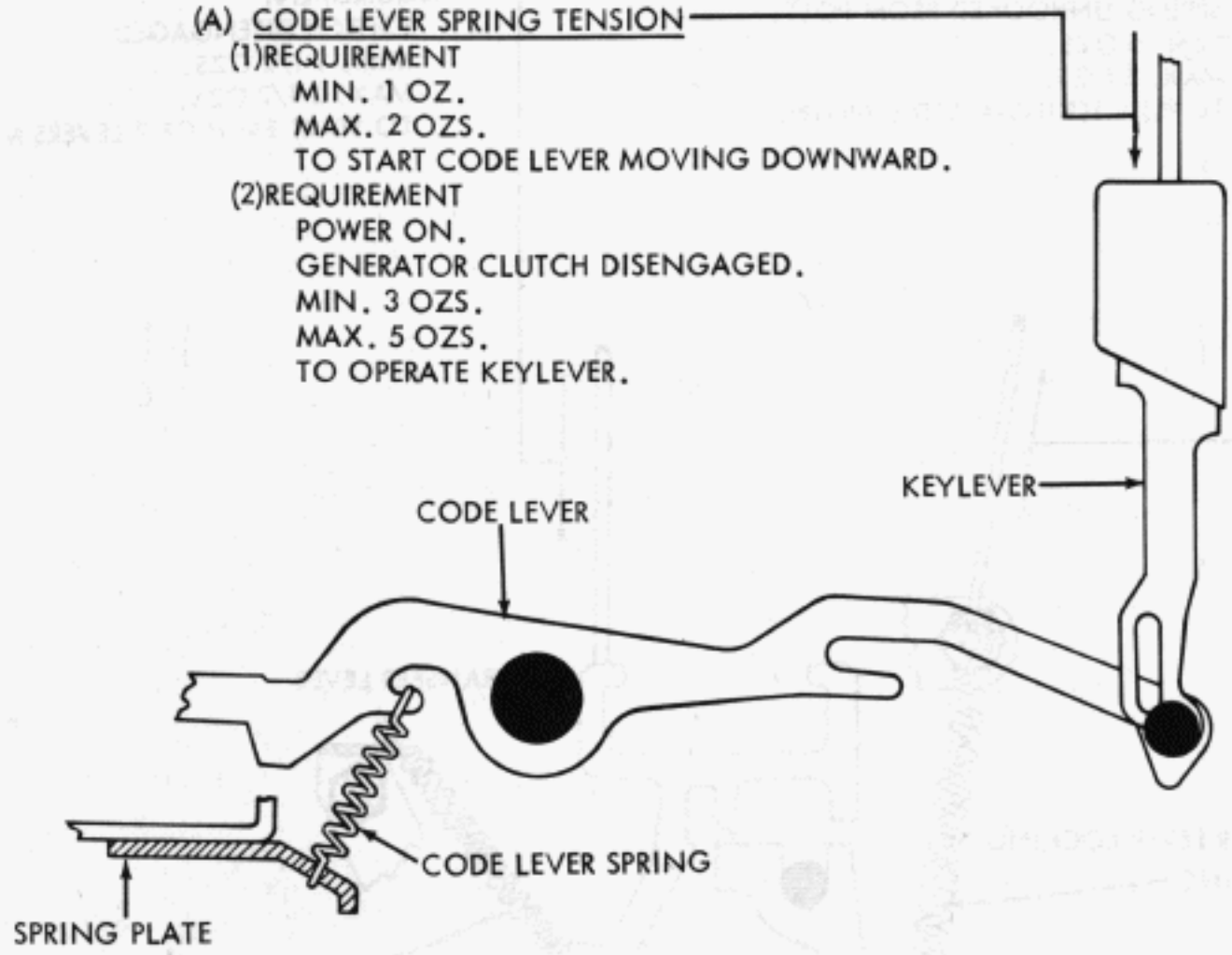

(B) LOCAL CARRIAGE RETURN FUNCTION BAIL SPRING TENSION
(COMBINED CODE LEVER AND BAIL SPRING)
REQUIREMENT
MIN. 1 OZ.
MAX. 3 OZS.
TO MOVE KEYLEVER DOWNWARD.

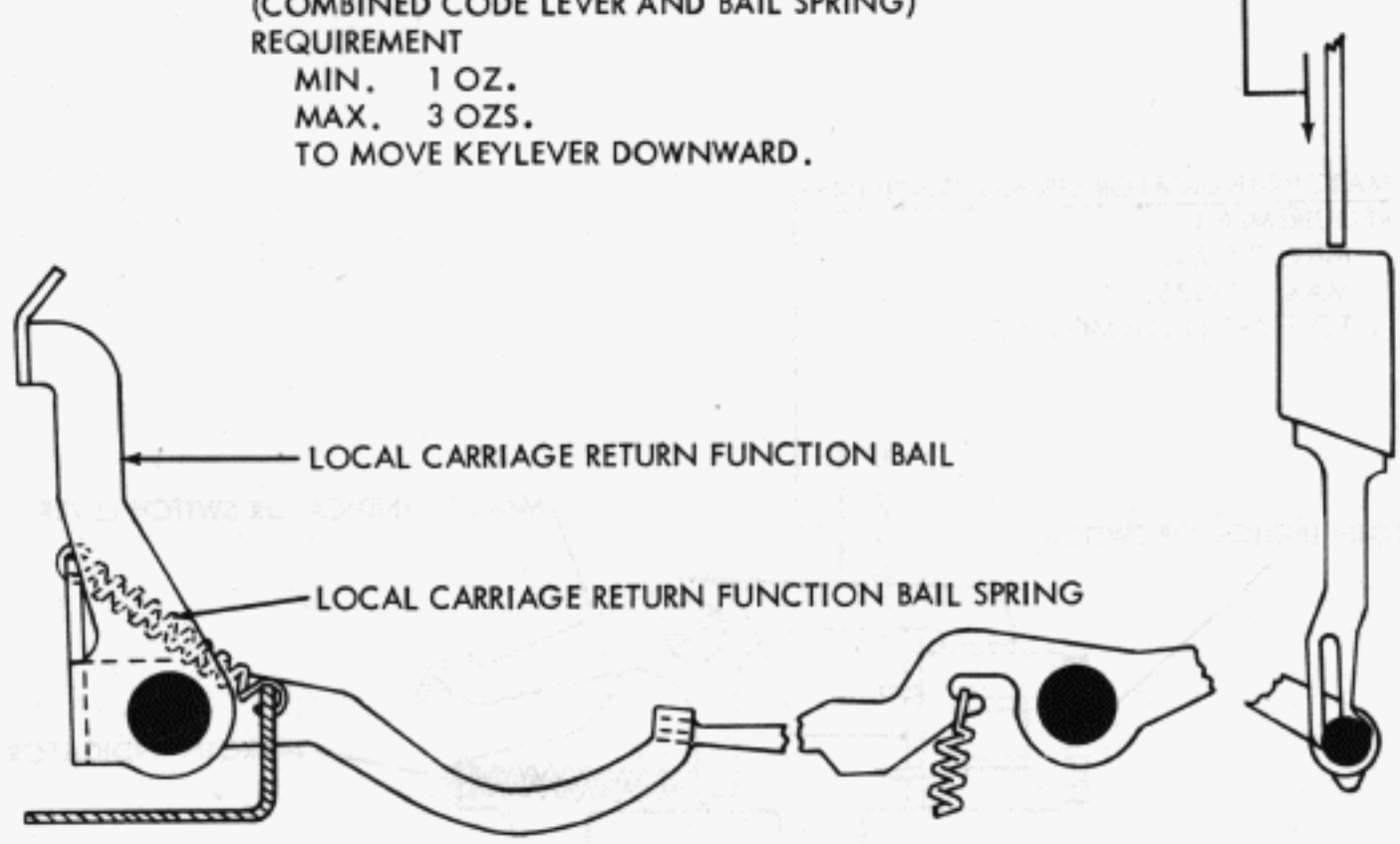

FIGURE 1-13. KEYBOARD, CODE LEVER AND LOCAL CARRIAGE RETURN FUNCTION BAIL MECHANISM

(B) TRANSFER LEVER LOCKING BAIL SPRING TENSION
REQUIREMENT
SPRING UNHOOKED FROM POST.
MIN. 5 OZS.
MAX. 6 OZS.
TO PULL TO INSTALLED LENGTH.

(A) TRANSFER LEVER SPRING TENSION
REQUIREMENT
CLUTCH DISENGAGED.
MIN. 1 1/2 OZS.
MAX. 2 1/2 OZS.
TO START EACH OF 7 LEVERS MOVING.

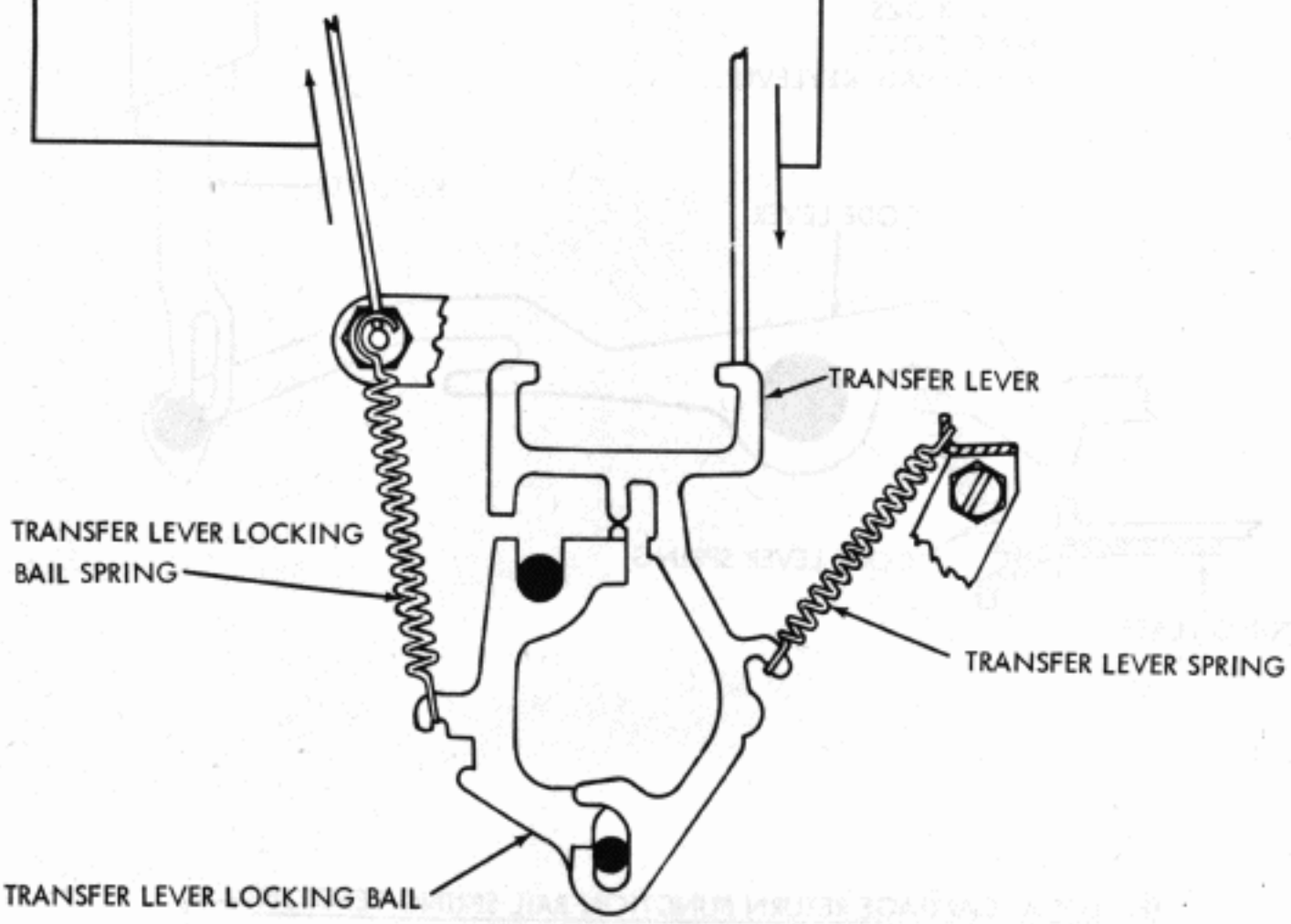

(C) MARGIN INDICATOR SPRING TENSION
REQUIREMENT
MIN. 7 OZS.
MAX. 11 OZS.
TO START LEVER MOVING.

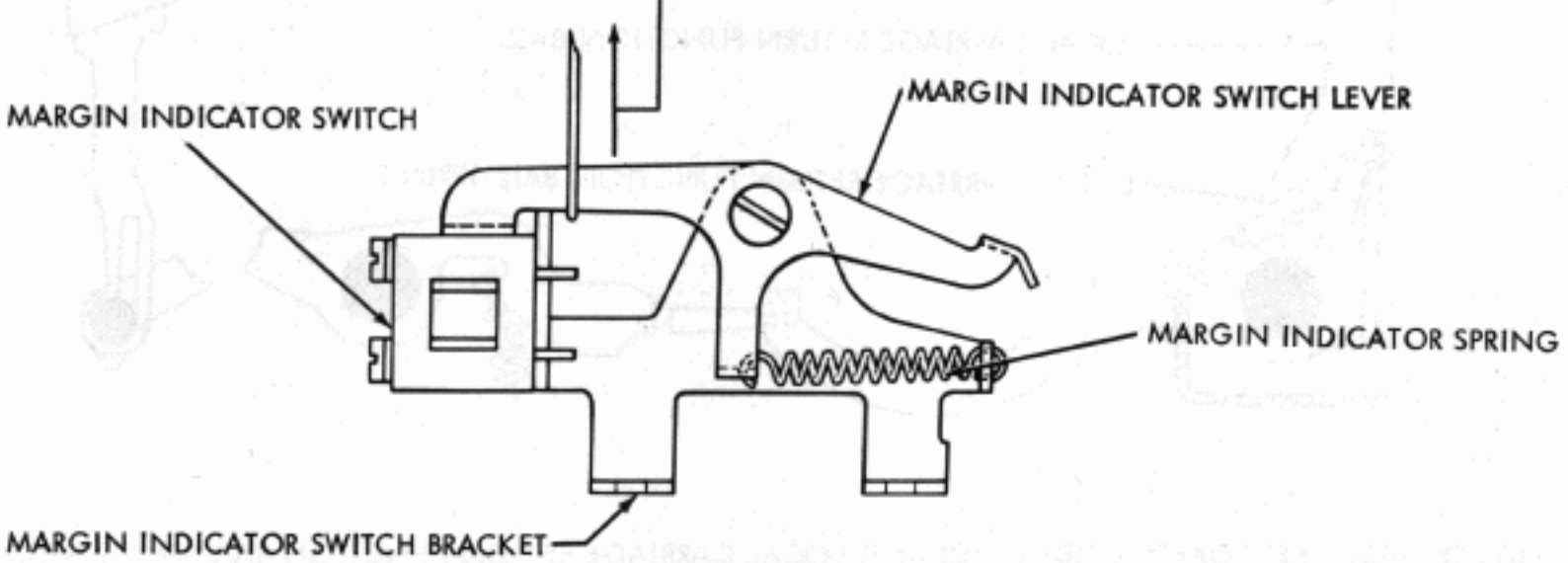

FIGURE 1-14. KEYBOARD, TRANSFER LEVER AND MARGIN INDICATOR MECHANISM

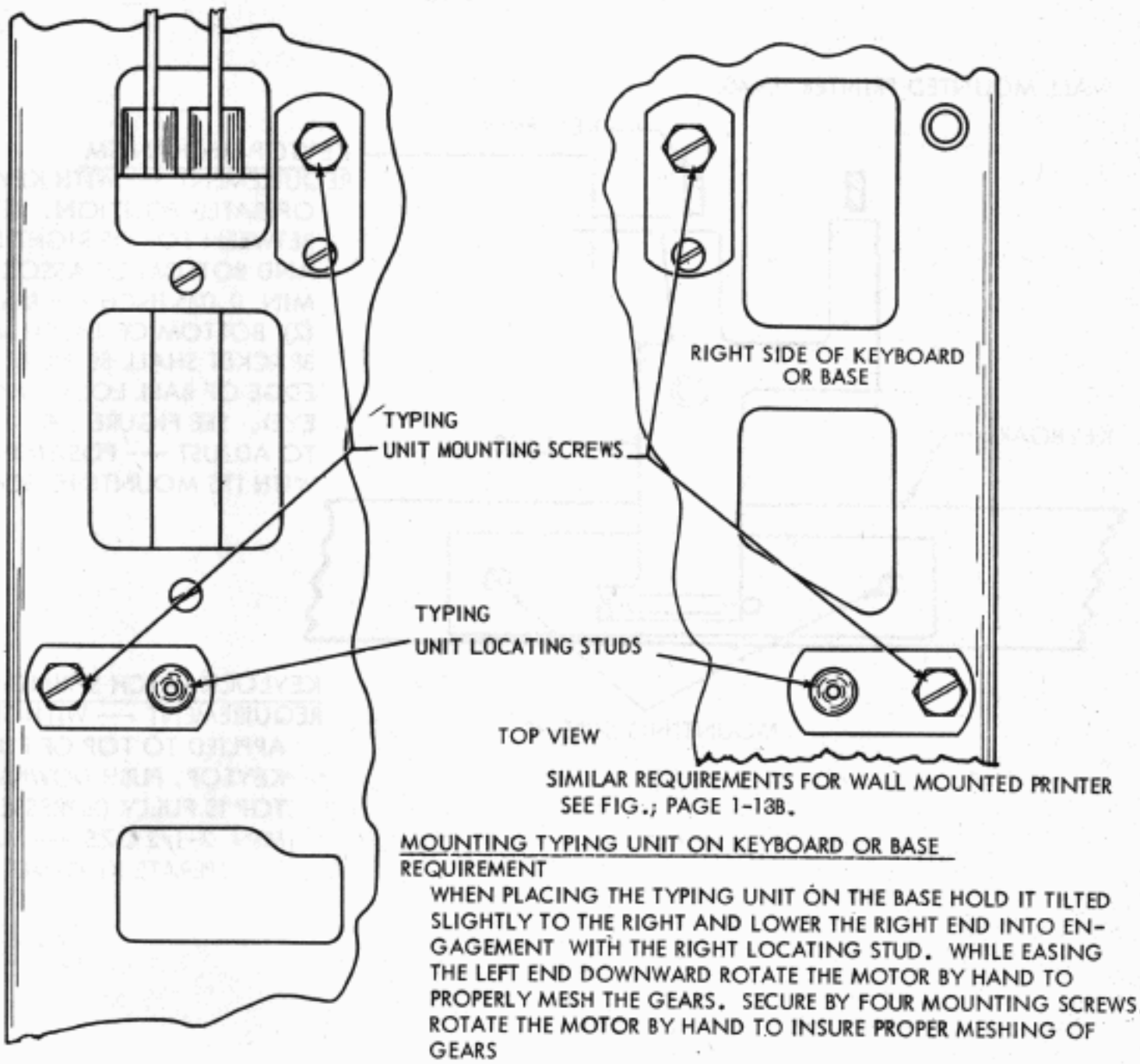

SIMILAR REQUIREMENTS FOR WALL MOUNTED PRINTER SEE FIG.; PAGE 1-13B.

MOUNTING TYPING UNIT ON KEYBOARD OR BASE

REQUIREMENT

WHEN PLACING THE TYPING UNIT ON THE BASE HOLD IT TILTED SLIGHTLY TO THE RIGHT AND LOWER THE RIGHT END INTO ENGAGEMENT WITH THE RIGHT LOCATING STUD. WHILE EASING THE LEFT END DOWNWARD ROTATE THE MOTOR BY HAND TO PROPERLY MESH THE GEARS. SECURE BY FOUR MOUNTING SCREWS. ROTATE THE MOTOR BY HAND TO INSURE PROPER MESHING OF GEARS

SIGNAL GENERATOR FRAME

REQUIREMENT

WITH TYPING UNIT MOUNTED IN POSITION, THERE SHOULD BE A PERCEPTIBLE AMOUNT OF BACKLASH BETWEEN THE SIGNAL GENERATOR DRIVEN GEAR AND THE SIGNAL GENERATOR DRIVING GEAR AT THE POINT WHERE BACKLASH IS THE LEAST.

TO ADJUST

REMOVE THE SIGNAL GENERATOR FRAME REAR MOUNTING SCREW AND LOOSEN THE SHIM SCREW. ADD OR SUBTRACT SHIMS AS REQUIRED.

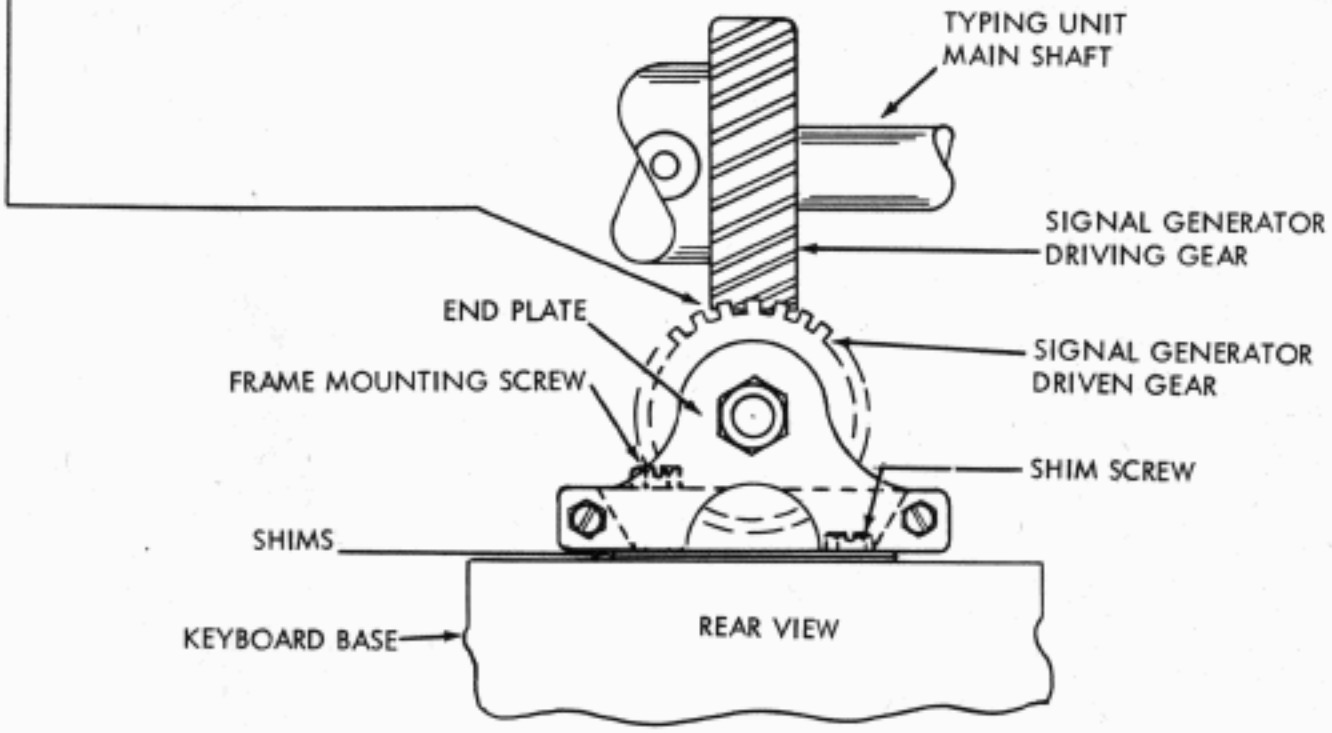

FIGURE 1-15. MOUNTING TYPING UNIT ON KEYBOARD OR BASE

WALL MOUNTED PRINTER (LK40)

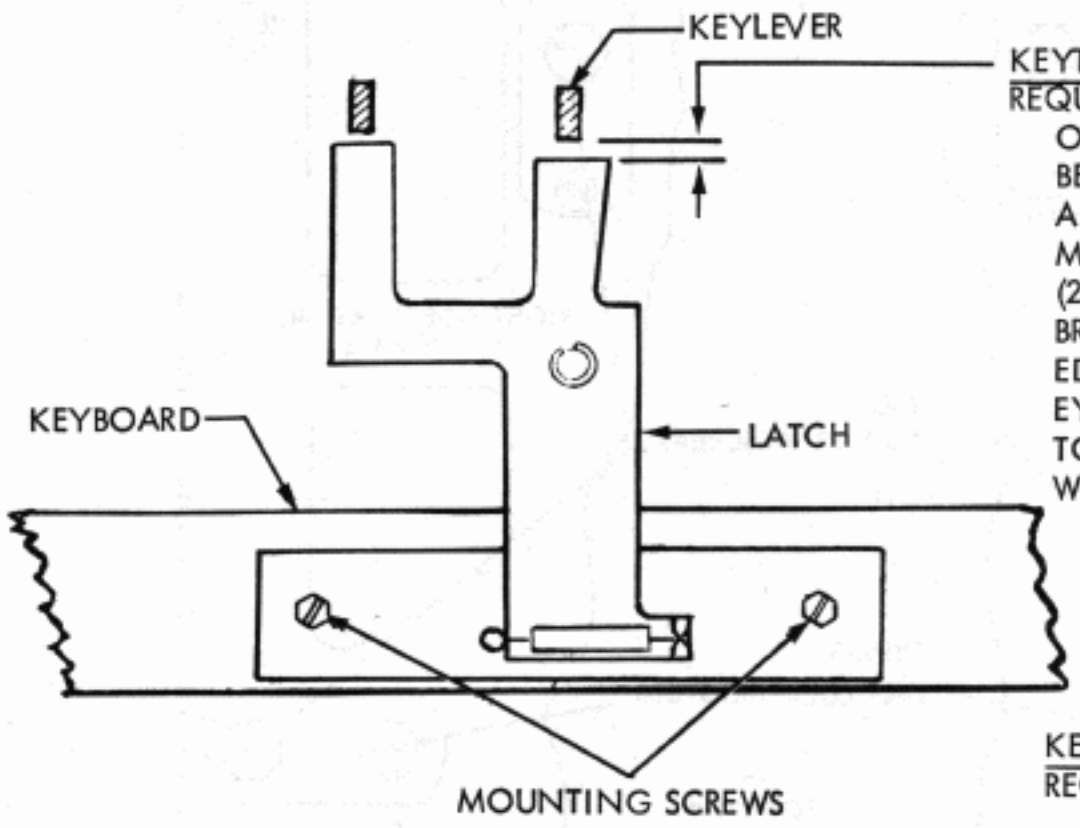

KEYTOP MECHANISM
REQUIREMENT --- WITH KEYBOARD IN UN-OPERATED POSITION. (1) CLEARANCE BETWEEN TOP OF RIGHT END OF LATCH AND BOTTOM OF ASSOCIATED KEYLEVER MIN 0.025 INCH --- MAX 0.045 INCH (2) BOTTOM OF LATCH MOUNTING BRACKET SHALL BE PARALLEL TO BOTTOM EDGE OF BALL LOCK CHANNEL (GAGE BY EYE). SEE FIGURE 1-8
TO ADJUST --- POSITION THE MECHANISM WITH ITS MOUNTING SCREWS LOOSENED.

KEYLOCK LATCH SPRING
REQUIREMENT --- WITH SPRING SCALE APPLIED TO TOP OF FUNCTION PERIOD KEYTOP, PUSH DOWNWARD UNTIL KEY-TOP IS FULLY DEPRESSED (FIG. 1-8). MIN 2-1/2 OZS --- MAX 5-1/2 OZS TO OPERATE KEYLEVER

FIGURE 1-16A KEYBOARD, KEYLOCK MECHANISM

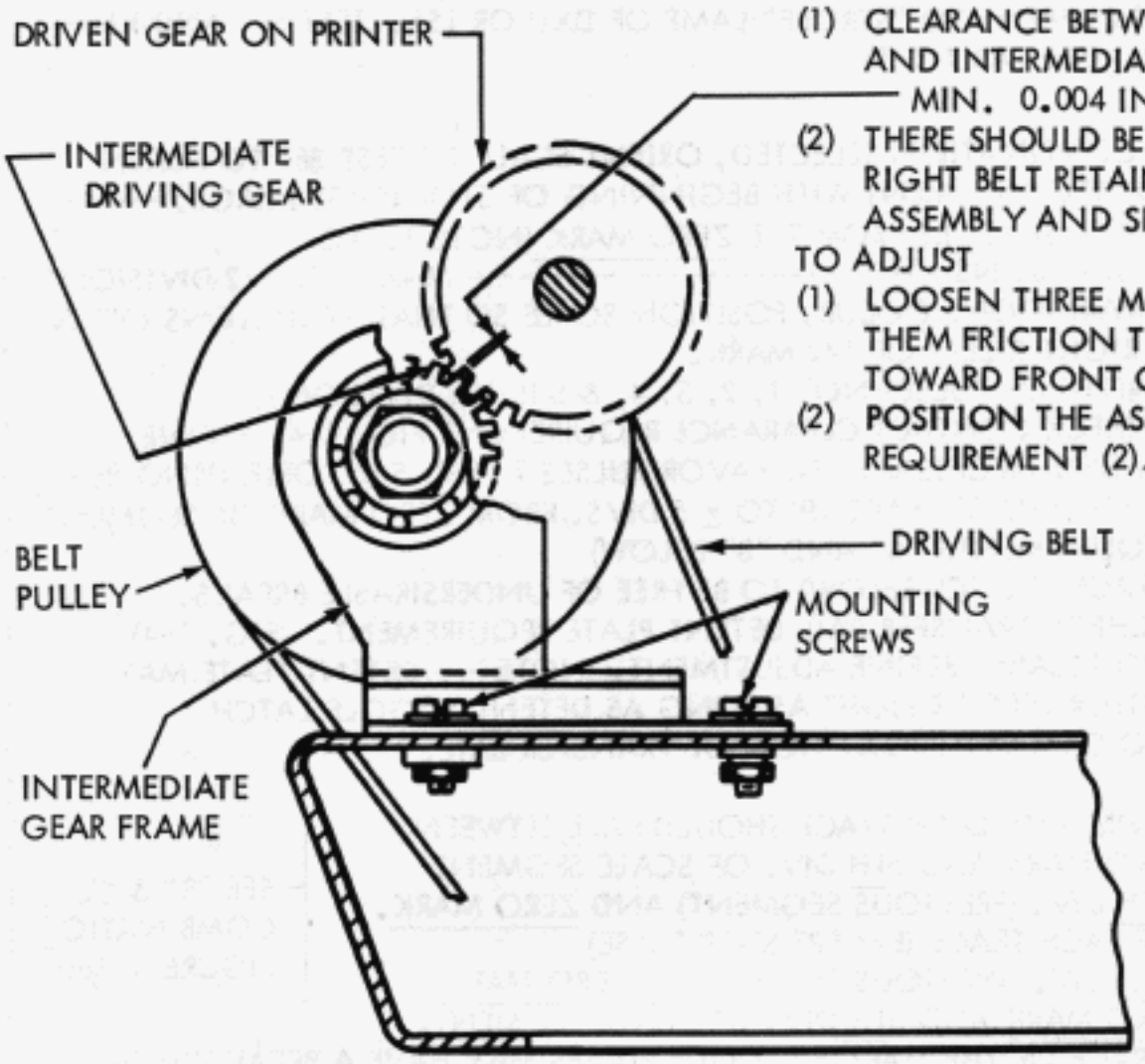

INTERMEDIATE GEAR ASSEMBLY

REQUIREMENTS

(1) CLEARANCE BETWEEN DRIVEN GEAR ON PRINTER AND INTERMEDIATE GEAR SHOULD BE MIN. 0.004 INCH --- MAX. 0.008 INCH

(2) THERE SHOULD BE SOME CLEARANCE BETWEEN RIGHT BELT RETAINER ON INTERMEDIATE GEAR ASSEMBLY AND SPACING CUTOUT LEVER ON PRINTER.

TO ADJUST

(1) LOOSEN THREE MOUNTING SCREWS AND MAKE THEM FRICTION TIGHT. POSITION THE ASSEMBLY TOWARD FRONT OR REAR TO MEET REQUIREMENT (1).

(2) POSITION THE ASSEMBLY TOWARD THE LEFT TO MEET REQUIREMENT (2). TIGHTEN SCREWS.

TIMING BELT

REQUIREMENT

FORCE OF 2 ± 1/2 OZS. TO DEFLECT BELT 1/8 INCH WHEN MEASURED MIDWAY BETWEEN PULLEYS.

TO ADJUST

WITH MOTOR PLATE MOUNTING SCREWS LOOSENED, SLIDE MOTOR TOWARD FRONT OF BASE TO INCREASE TENSION OR TOWARD REAR OF BASE TO DECREASE TENSIONS. TIGHTEN SCREWS.

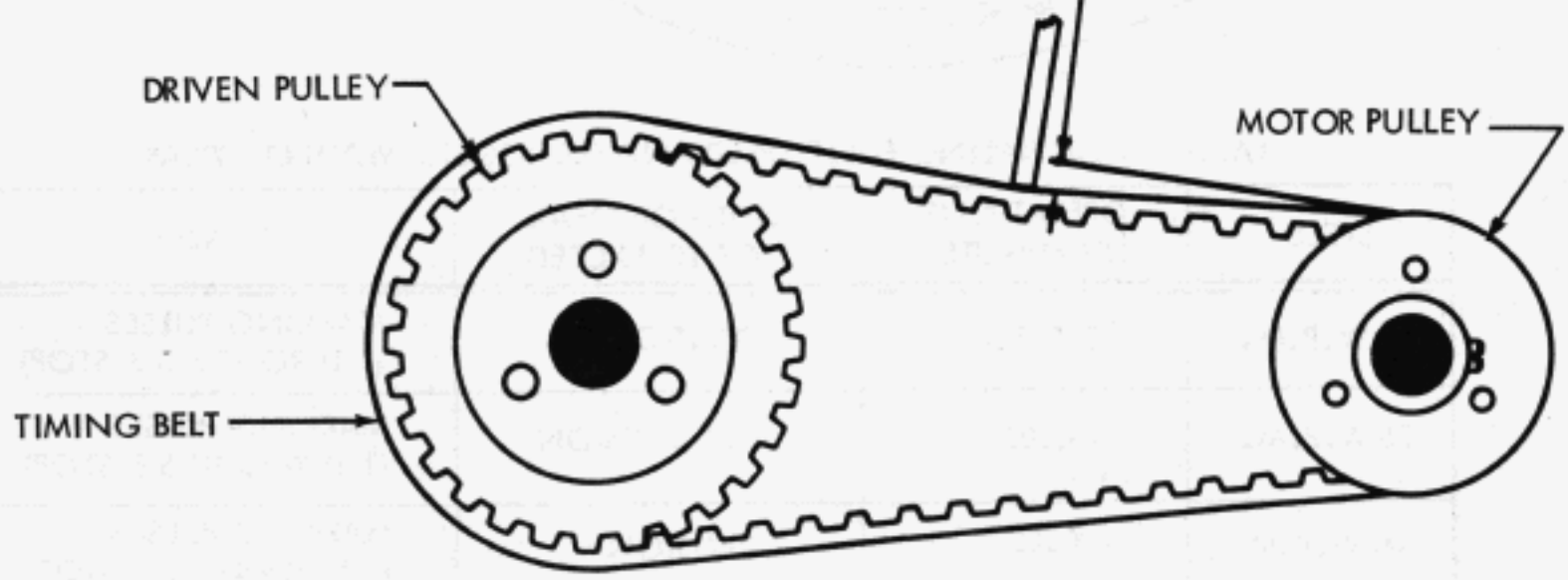

FIGURE 1-16B KEYBOARD, WALL MOUNTED BASE AND DRIVE MECHANISM

SIGNAL CONTACT CLEARANCE (USING SIGNAL TEST SET --- SUCH AS DXD/LSS)
PRELIMINARY --- WITH ELECTRICAL NOISE SUPPRESSOR DISCONNECTED FROM CIRCUIT, CONNECT SIGNAL CONTACTS SO AS TO INTERRUPT (KEY) CURRENT TO "STROBE" LAMP OF DXD OR LSS. TEST SET AND KEYBOARD MUST OPERATE AT SAME SPEED. (SEE TABLE 1-1).

REQUIREMENTS

(1) WITH BLANKS COMBINATION SELECTED, ORIENT SCALE OF TEST SET TO ALIGN ZERO MARK OF STOP SEGMENT WITH BEGINNING OF STOP PULSE IMAGE. LENGTH OF TRACE SHALL BE FROM THE ZERO MARK (NOTE 1.) TO
(MIN. 141-1/2 DIVISIONS ---------- MAX. 142-1/2 DIVISIONS)
TO ADJUST - IF VARIATIONS OCCUR, POSITION SCALE SO THAT VARIATIONS EXTEND EQUALLY ON RIGHT & LEFT OF 142 MARK.

(2) NOMINAL LENGTH OF PULSES NO. 1, 2, 3, 4, & 5 IS 100 DIVISIONS.
TO ADJUST - RECHECK CONTACT CLEARANCE REQUIREMENT FIG. 1-4. REFINE CLEARANCE, WHERE NECESSARY, TO FAVOR PULSES 1 THRU 5 BY ORIENTING BEGINNING OF STOP PULSE TRACE UP TO ± 5 DIVS. FROM ZERO MARK OF SEGMENT (REFER TO REQUIREMENTS "A" AND "B" BELOW)

(3) EACH PULSE TRACE (SEE "C" BELOW) TO BE FREE OF UNDERSIRABLE BREAKS.
TO ADJUST - RECHECK TRANSFER BAIL DETENT PLATE REQUIREMENT. (FIG. 1-4) AND WHERE NECESSARY, REFINE ADJUSTMENT. NOTE --- DETENT PLATE MAY BE ROTATED EITHER LEFT OR RIGHT AS LONG AS DETENT TOGGLE LATCH CONTINUES TO CAM OFF PROJECTION OF TRANSFER BAIL.

A. BEGINNING OF EACH TRACE SHOULD FALL BETWEEN
   1. ZERO MARK AND 5TH DIV. OF SCALE SEGMENT
   2. 95TH DIV. (PREVIOUS SEGMENT) AND ZERO MARK.
B. END OF EACH TRACE (EXCEPT STOP PULSE)
   1. 95TH DIV. (PREVIOUS SEGMENT) & ZERO MARK
   2. ZERO MARK AND 5TH DIV. OF SCALE SEGMENT.

} SEE "R" & "Y" COMBINATION FIGURE 1-16D

C. EACH TRACE OF THE MARKING CODE PULSES MAY HAVE A BREAK WITHIN TOLERANCE LIMITS --- THE BREAK SHOULD NOT OCCUR PRIOR TO 95TH DIVISION OF OBSERVED PULSE (1 THROUGH 5) OR 137TH DIVISION OF STOP PULSE. SEE TABLE 1-1 FOR PERMISSIBLE WIDTH OF BREAK AT SPEED OF OPERATION.

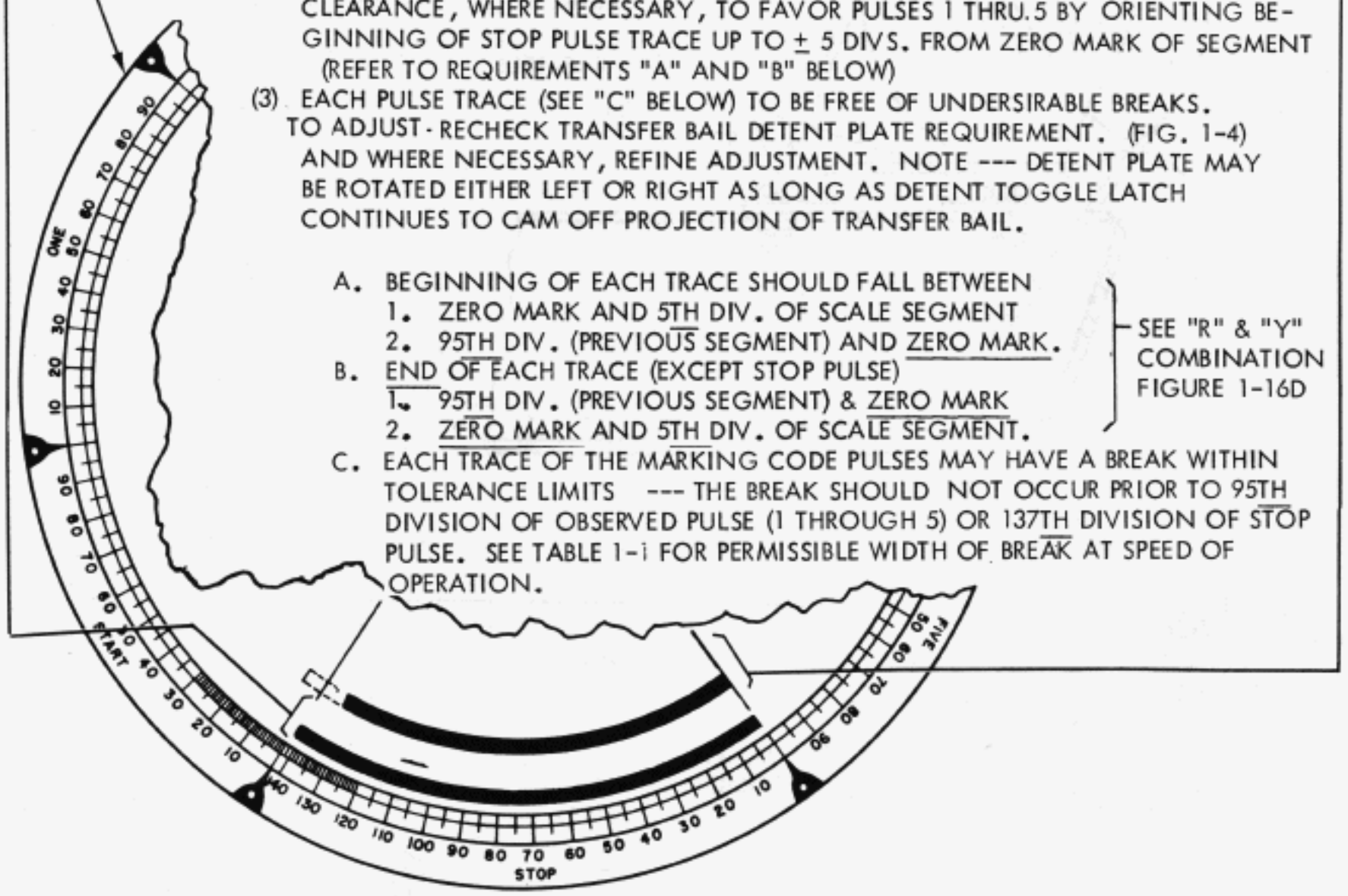

TABLE 1-1 SIGNALING PULSE SPEED AND PERMISSIBLE WIDTH OF BREAK

SPEED	OPERATIONS PER MINUTE	WIDTH OF BREAK NOT TO EXCEED	REMARKS
60 W.P.M.	368.182	1 DIVISION	MARKING PULSES (1 THROUGH 5 & STOP)
75 W.P.M.	460.00	1-1/2 DIVISION	MARKING PULSES (1 THROUGH 5 & STOP)
100 W.P.M.	600.00	2 DIVISION	MARKING PULSES (1 THROUGH 5 & STOP)

FIGURE 1-16C SIGNAL GENERATOR PULSE REQUIREMENTS.

"R" AND "Y" COMBINATION

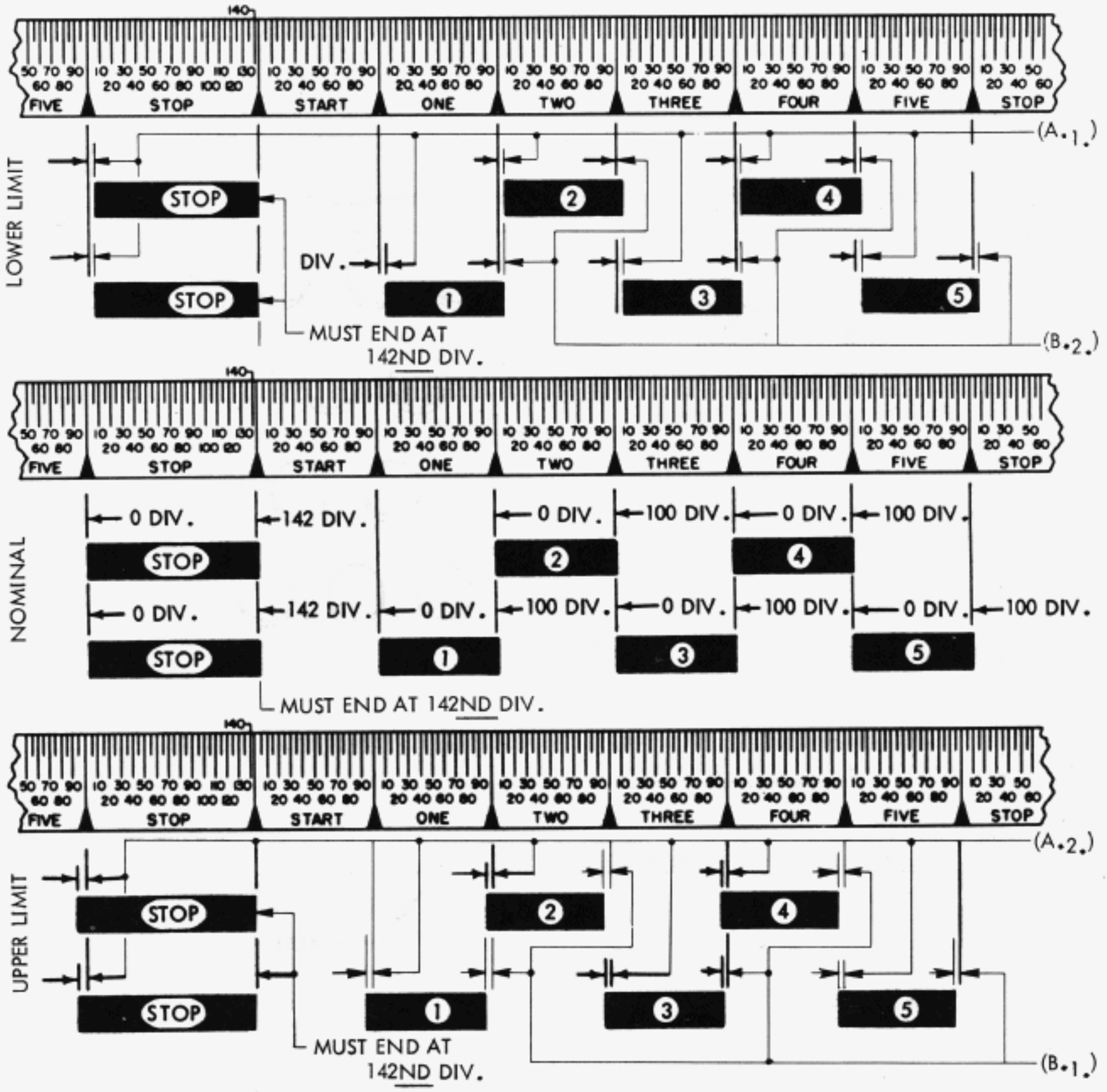

"R" AND "Y" COMBINATION

FOR UNITS WITH SPACING CONTACTS OF SIGNAL GENERATOR WIRED FOR POLAR OPERATION

REQUIREMENTS ---

(1) SPACING PULSES SHALL START NO EARLIER THAN 94TH DIV. OF PREVIOUS SEGMENT AND NO LATER THAN 6TH DIV. OF PULSE UNDER OBSERVATION.

(2) TRACE OF SPACING PULSE SHALL END NO EARLIER THAN 94TH DIV. OF PULSE UNDER OBSERVATION AND END NO LATER THAN 6TH DIV. OF FOLLOWING PULSE.

(3) TRACE OF START PULSE SHALL BEGIN NO EARLIER THAN 136TH DIV. OF STOP SEGMENT AND NO LATER THAN 6TH DIV. OF START SEGMENT. START PULSE SHALL END NO EARLIER THAN 94TH DIV. OF START SEGMENT AND END NO LATER THAN 6TH DIV. OF NO. 1. SEGMENT.

(4) SPACING PULSE MAY HAVE A BREAK PROVIDED THE BREAK IS NOT OVER ONE DIVISION WIDE AND IT DOES NOT OCCUR PRIOR TO 95TH DIV. OF PULSE UNDER OBSERVATION.

FIGURE 1-16D SIGNAL MARGINS (USING TEST SET)

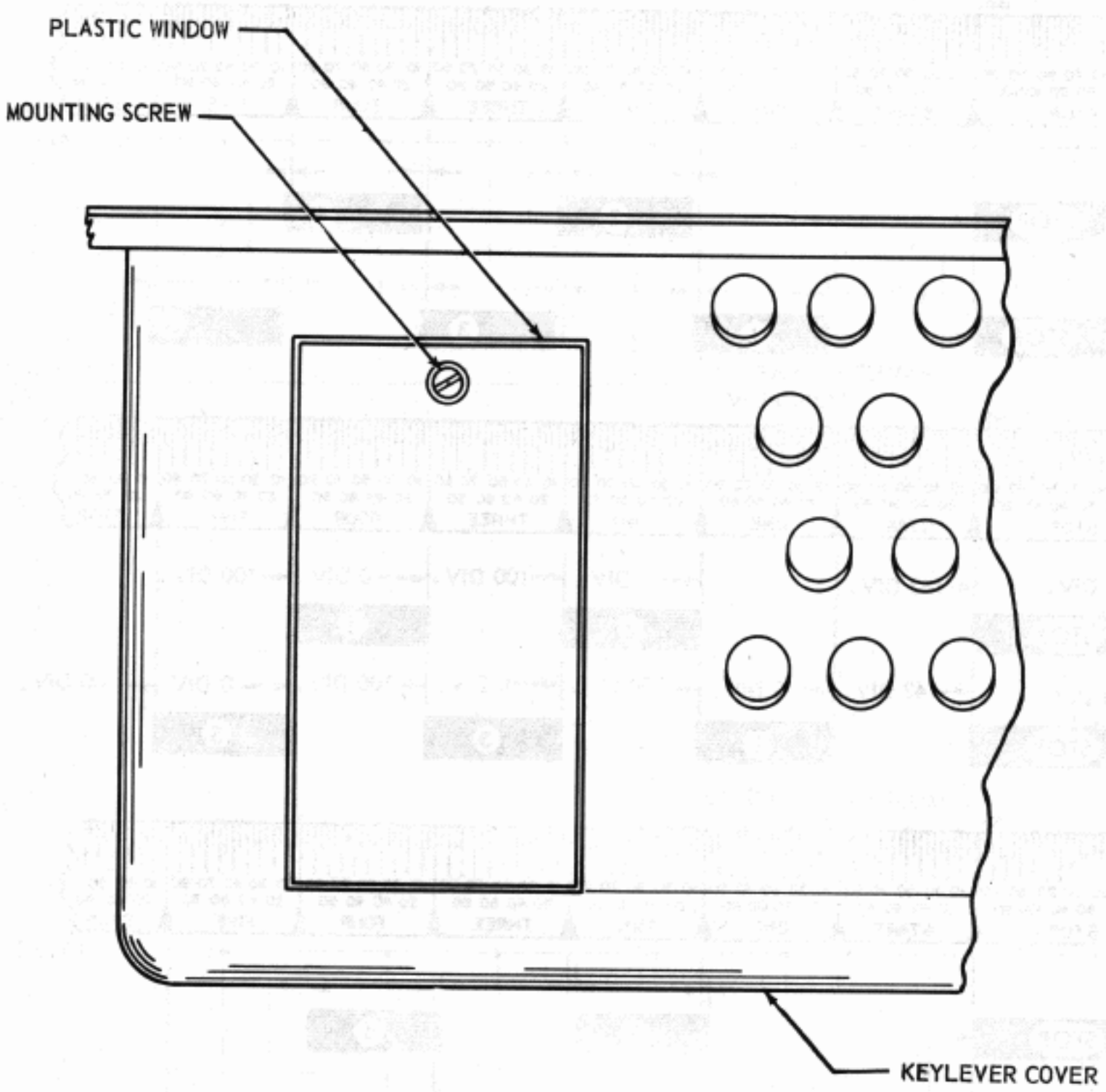

PLASTIC WINDOW

REQUIREMENT

PLASTIC WINDOW SHOULD BE FULLY SEATED IN POSITION BEFORE TIGHTENING MOUNTING SCREW.

TO ADJUST

POSITION WINDOW WITH MOUNTING SCREW LOOSENED.

FIGURE 1-16. KEYBOARD, PLASTIC WINDOW

3. BASE

THE FOLLOWING KEYBOARD ADJUSTMENTS CONSTITUTE THE ADJUSTMENT FOR THE BASE:

a. ADJUSTMENTS
   (1) STANDARD
      (a) INTERMEDIATE GEAR BRACKET - FIGURE 1-11
      (b) MOUNTING TYPING UNIT ON BASE - FIGURE 1-15
   (2) VARIABLE FEATURES
      (a) BREAK LEVER EXTENSION - FIGURE 2-6
      (b) TIME DELAY DISABLING DEVICE - FIGURE 2-5
      (c) TIME DELAY MECHANISM POSITION - FIGURE 2-4
      (d) TIME DELAY SWITCH POSITION - FIGURE 2-2
b. SPRING TENSIONS
   (1) STANDARD
      (a) LOCAL CARRIAGE RETURN BAIL - FIGURE 4-22
      (b) LOCAL LINE FEED TRIP LINK - FIGURE 4-22
      (c) MARGIN INDICATOR - FIGURE 1-14
   (2) VARIABLE FEATURES
      (a) BREAK KEYLEVER - FIGURE 2-6
      (b) CONTACT LATCH PAWL - FIGURE 2-3
      (c) CONTACT PAWL - FIGURE 2-3
      (d) ECCENTRIC FOLLOWER PAWL - FIGURE 2-5
      (e) TIME DELAY RATCHET WHEEL - FIGURE 2-2

4. TYPING UNIT

WHEN MAKING A COMPLETE ADJUSTMENT OF TYPING UNIT, THE FOLLOWING CONDITIONING OPERATIONS SHOULD BE PERFORMED TO PREVENT DAMAGE:

a. LOOSEN THE SHIFT LEVER DRIVE ARM CLAMP SCREW, (FIGURE 1-26)
b. MOVE THE RIGHT AND LEFT VERTICAL POSITIONING LEVER ECCENTRIC STUDS (FIGURES 1-39 AND 1-40) IN ROCKER SHAFT BRACKETS TO THEIR LOWEST POSITION.
c. LOOSEN THE TWO BEARING STUD MOUNTING SCREWS AND THE TWO CONNECTING STRIP CLAMP SCREWS IN THE HORIZONTAL POSITIONING DRIVE LINKAGE (FIGURE 1-46).
d. LOOSEN THE CLAMP SCREWS AND MOVE THE REVERSING SLIDE BRACKETS TO THEIR UPPERMOST POSITION (FIGURE 1-45).
e. LOOSEN THE FUNCTION RESET BAIL BLADE MOUNTING SCREWS (FIGURE 1-44).
f. UNITS EQUIPPED WITH TWO-STOP FUNCTION CLUTCHES: LOOSEN THE SHOULDER BUSHINGS ON EACH FUNCTION STRIPPER BLADE ARM AND MOVE STRIPPER BLADE AND ARMS TO THEIR LOWEST POSITIONS. (FIGURE 4-37).
g. LOOSEN THE CARRIAGE RETURN LEVER CLAMP SCREW. (FIGURE 1-51).
h. LOOSEN THE CLAMP SCREWS IN THE OSCILLATING RAIL SLIDE. (FIGURE 1-41).
i. LOOSEN THE REVERSING SLIDE ADJUSTING STUD. (FIGURE 1-45).
j. LOOSEN THE SHIFT CODE BAR GUIDE PLATE MOUNTING NUTS. (FIGURE 1-43).
k. CHECK THE FOLLOWING ADJUSTMENTS DURING EACH LUBRICATING PERIOD:
   (1) PRINTING CARRIAGE POSITION (FIGURE 1-57).
   (2) PRINTING HAMMER BEARING STUD. (FIGURE 1-57).
   (3) PRINTING HAMMER STOP BRACKET. ALSO SEE NOTE. (FIGURE 1-60).
   (4) LOWER DRAW WIRE ROPE (FIGURE 1-48)
   (5) DASHPOT VENT SCREW ADJ. (FIG. 1-52) AND CHECK TRANSFER SLIDE FOR BINDS

NOTE

TO FACILITATE MAKING THE FOLLOWING ADJUSTMENTS, REMOVE THE RANGE FINDER AND SELECTOR MAGNET ASSEMBLIES. TO INSURE BETTER OPERATION, PULL A PIECE OF KS BOND PAPER BETWEEN THE ARMATURE AND THE POLE PIECES TO REMOVE ANY OIL OR FOREIGN MATTER THAT MAY BE PRESENT. MAKE CERTAIN THAT NO LINT OR PIECES OF PAPER REMAIN BETWEEN THE POLE PIECES AND ARMATURE.

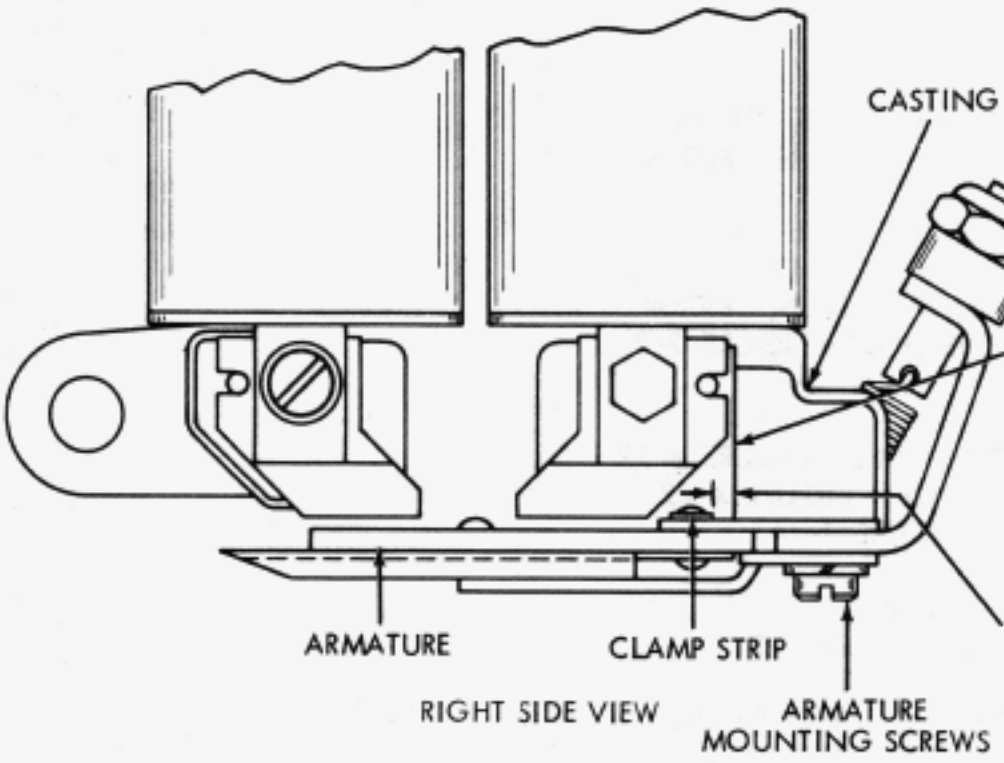

RIGHT SIDE VIEW

SELECTOR ARMATURE

NOTE

THIS REQUIREMENT NEED NOT BE MADE NOR CHECKED IF THE SELECTOR MAGNET BRACKET AND RECEIVING MARGIN REQUIREMENTS ARE MET.

(1) REQUIREMENT (ARMATURE CLAMP STRIP)
CLEARANCE BETWEEN ARMATURE CLAMP STRIP AND CASTING.
MIN. 0.025 INCH
MAX. 0.045 INCH

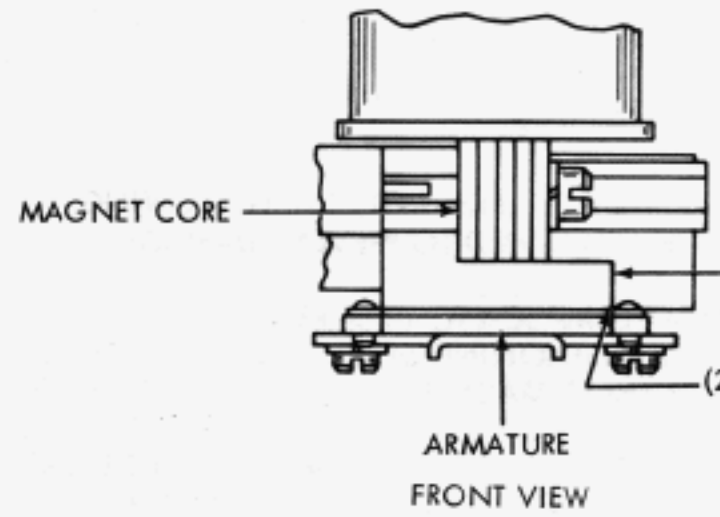

FRONT VIEW

(2) REQUIREMENT (ARMATURE ALIGNMENT)
OUTER EDGE OF ARMATURE SHOULD BE FLUSH WITHIN 0.015 INCH WITH OUTER EDGE OF POLE PIECES.

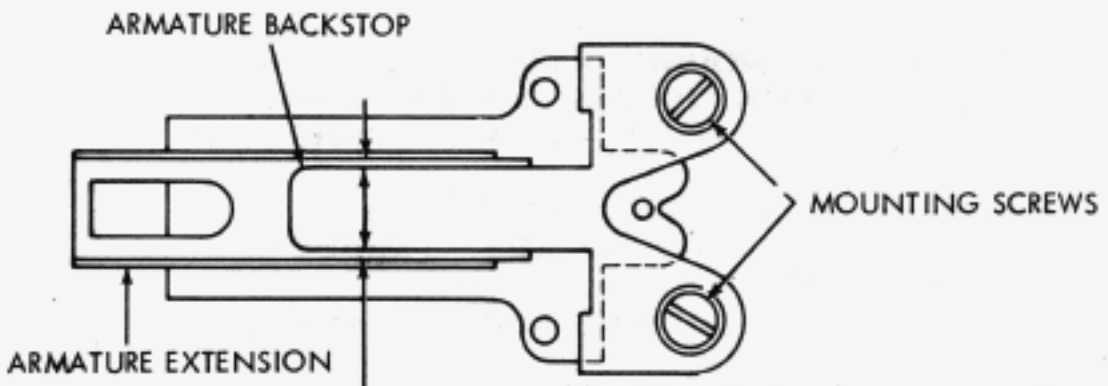

(BOTTOM VIEW)

(3) REQUIREMENT (ARMATURE BACKSTOP ALIGNMENT)
CLEARANCE BETWEEN SIDES OF BACKSTOP AND SIDES OF ARMATURE EXTENSION.
MIN. 0.010 INCH

TO ADJUST

1. POSITION ARMATURE SPRING ADJUSTING NUT TO HOLD ARMATURE FIRMLY AGAINST PIVOT EDGE OF CASTING.
2. POSITION ARMATURE AND BACKSTOP WITH MOUNTING SCREWS LOOSENED.

FIGURE 1-17. TYPING UNIT, SELECTOR MAGNET

NOTE

THE APPROPRIATE PRELIMINARY SELECTOR ARMATURE SPRING TENSION ADJUSTMENT MUST BE MADE PRIOR TO THE SELECTOR MAGNET BRACKET ADJUSTMENT.

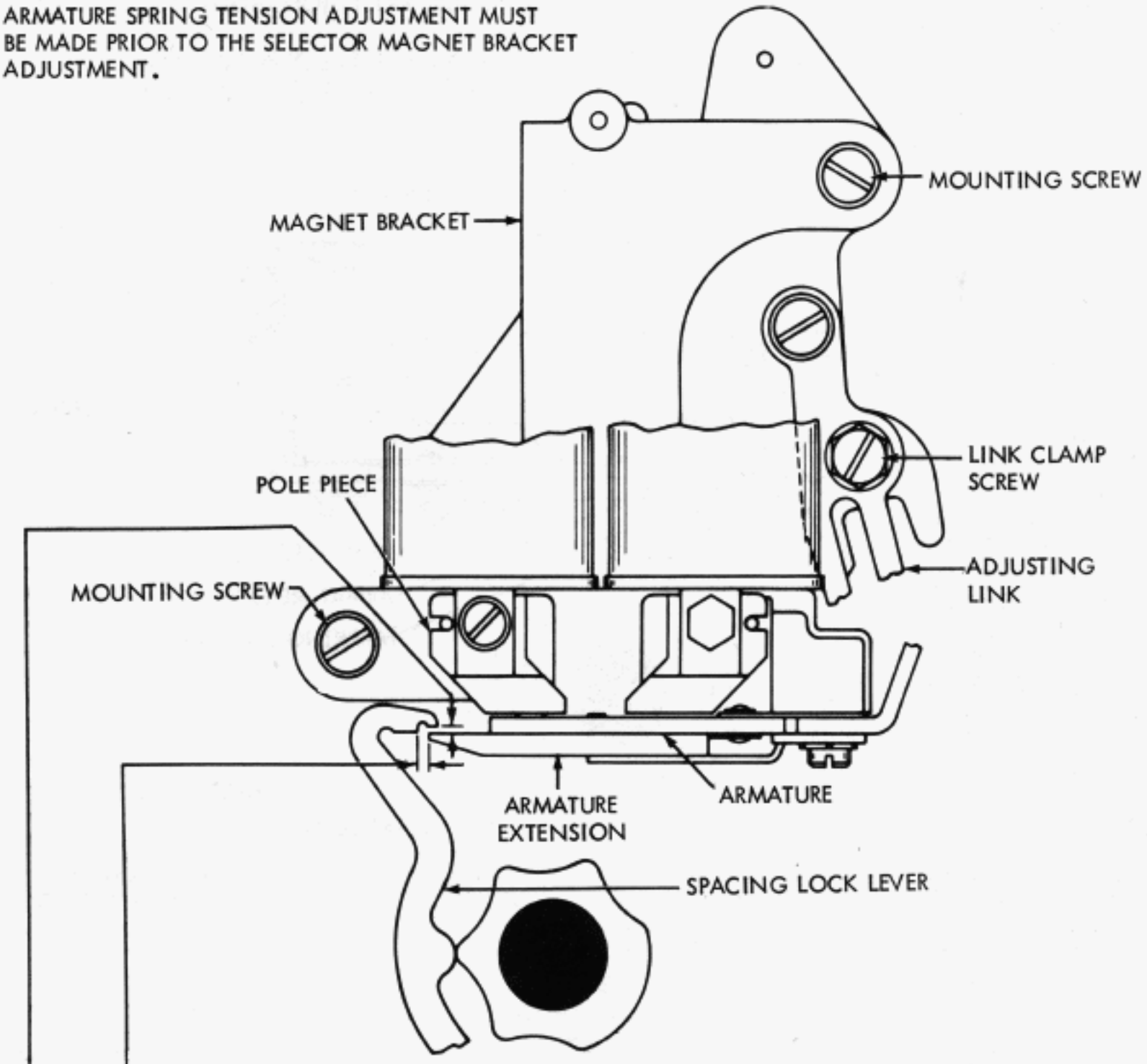

SELECTOR MAGNET BRACKET (MAGNETS ENERGIZED)

(1) REQUIREMENT --- SPACING LOCK LEVER ON HIGH PART OF CAM. ARMATURE IN CONTACT WITH POLE PIECE. CLEARANCE BETWEEN END OF ARMATURE EXTENSION AND SHOULDER ON SPACING LOCK LEVER.
MIN. 0.020 INCH ---------- MAX. 0.035 INCH
TO ADJUST --- LOOSEN TWO MAGNET BRACKET MOUNTING SCREWS AND ADJUSTING LINK CLAMP SCREW. POSITION MAGNET BRACKET BY MEANS OF ADJUSTING LINK AND TIGHTEN LINK CLAMP SCREW ONLY.

(2) REQUIREMENT --- SPACING LOCK LEVER ON HIGH PART OF CAM. ARMATURE IN CONTACT WITH POLE PIECE. SOME CLEARANCE BETWEEN UPPER SURFACE OF ARMATURE EXTENSION AND LOWER SURFACE OF SPACING LOCK LEVER WHEN LOCK LEVER IS HELD DOWNWARD.
MAX. 0.003 INCH
TO ADJUST --- POSITION UPPER END OF MAGNET BRACKET. TIGHTEN TWO MAGNET BRACKET MOUNTING SCREWS. RECHECK REQUIREMENT (1).

FIGURE 1-18. TYPING UNIT, SELECTOR MAGNET, RIGHT SIDE VIEW

SELECTOR ARMATURE SPRING (FOR UNITS WITH SINGLE ANTI-FREEZE BUTTON ON SELECTOR ARMATURE)

REQUIREMENT --- (PRELIMINARY) WITH START LEVER, MARKING AND SPACING LOCK LEVERS ON HIGH PART OF THEIR CAMS, HOOK SCALE UNDER END OF ARMATURE EXTENSION (HOLD AS NEARLY VERTICAL AS POSSIBLE). IT SHOULD REQUIRE

(a) MIN. 1-1/2 OZS. ---------- MAX. 2 OZS. FOR 20 MA OPERATION.

(b) MIN. 2-1/2 OZS. ---------- MAX. 3 OZS. FOR 60 MA OPERATION.

TO PULL ARMATURE TO MARKING POSITION.

TO ADJUST --- POSITION ADJUSTING NUT.

REQUIREMENT --- (FINAL) REFER TO SELECTOR RECEIVING MARGIN PAGE 1-26.

NOTE
SPRING TENSIONS SHOWN ON THIS PAGE PERMIT OPERATION OF PRINTER PRIOR TO MEASUREMENT OF RECEIVING MARGINS. REFINE SPRING TENSION FOR MAXIMUM SELECTOR PERFORMANCE WITH UNIT CONNECTED TO SPECIFIC CIRCUIT IN WHICH IT IS TO FUNCTION (OPERATING AT DESIRED SPEED AND LINE CURRENT). SEE FIG. 1-23.

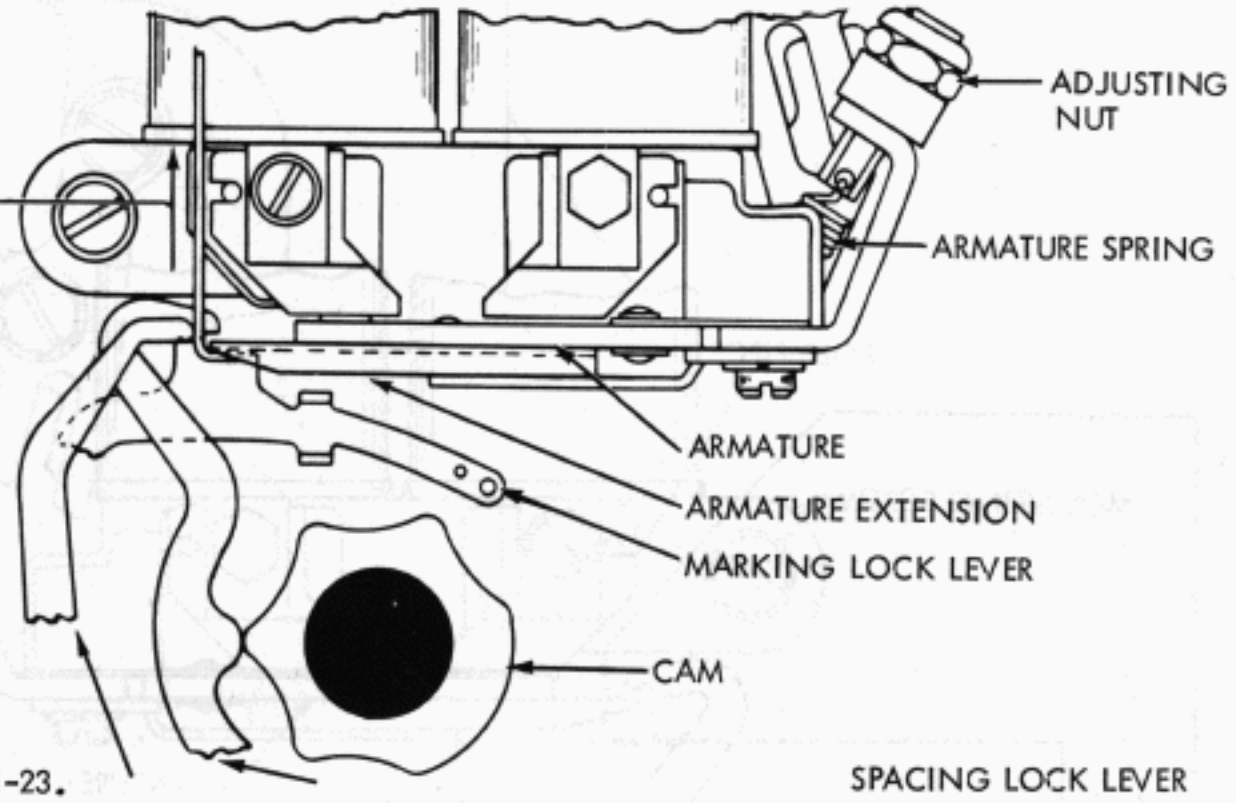

SELECTOR ARMATURE SPRING (FOR UNITS WITH TWO ANTI-FREEZE BUTTONS ON SELECTOR ARMATURE)

REQUIREMENT --- (PRELIMINARY) WITH START LEVER, MARKING AND SPACING LOCK LEVERS ON HIGH PART OF THEIR CAMS, HOOK SCALE UNDER END OF ARMATURE EXTENSION (HOLD AS NEARLY VERTICAL AS POSSIBLE). IT SHOULD REQUIRE

(a) APPROXIMATELY 1/2 OZ. FOR 20 MA. OPERATION.

(b) APPROXIMATELY --- 3/4 OZ FOR 60 MA OPERATION

TO PULL REAR BUTTON AGAINST ITS POLE PIECE

TO ADJUST --- POSITION ADJUSTING NUT.

REQUIREMENT --- (FINAL) WHEN A DISTORTION TEST SET IS AVAILABLE, REFINE SELECTOR ARMATURE SPRING ADJUSTMENT TO MEET SELECTOR RECEIVING MARGIN PAGE 1-26. NOTE --- WITH SELECTOR MAGNETS ENERGIZED, FRONT ANTI-FREEZE BUTTON MUST BE IN CONTACT WITH ITS MAGNET CORE.

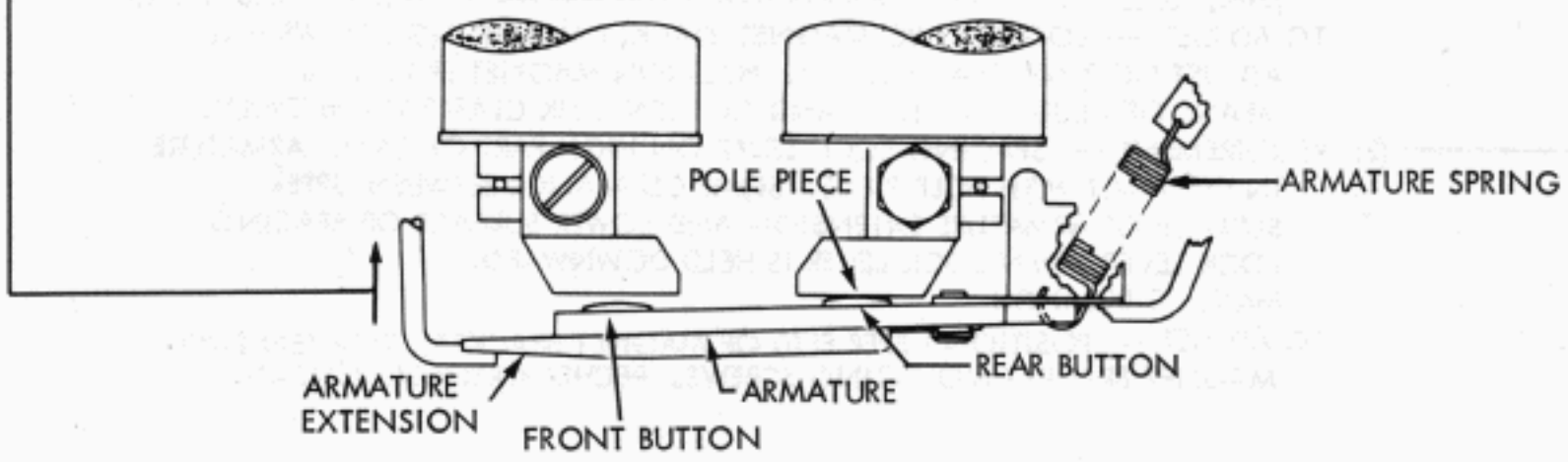

FIGURE 1-19. TYPING UNIT, SELECTOR MECHANISM, RIGHT SIDE VIEW

SERVICE DATA FOR THE SELECTOR MAGNET DRIVER
REQUEST SPECIFICATION 50,0425
(WALL MOUNTED PRINTER APPLICATION)

SELECTOR ARMATURE SPRING
DATA FOR 500 MA SELECTOR COILS
REFER TO FIGURE 1-19 USING THE FOLLOWING :

SINGLE BUTTON ARMATURE
500 MA; MIN 4-1/2 OZS --- MAX 5-1/2 OZS

BOUBLE BUTTON ARMATURE
500 MA; APPROXIMATELY --- 1-1/3 OZ
TO PULL REAR BUTTON AGAINSTS ITS POLE PIECE

MARKING LOCK LEVER SPRING

REQUIREMENT --- LETTERS COMBINATION SELECTED, ROTATE MAIN SHAFT UNTIL SELECTOR CLUTCH IS DISENGAGED. SCALE APPLIED TO LOWER EXTENSION OF LOCK LEVER
MIN. 1-1/2 OZS. ---------- MAX. 3 OZS.
TO START MARKING LOCK LEVER MOVING.

NOTE FOR BELL SERVICE ONLY
WHEN CHECKING UNITS WITH SINGLE BUTTON ARMATURE, SIGNAL LINE SHALL BE SHUNTED BY A TWX SWITCHBOARD SIMULATOR. SIMULATOR SHALL NOT BE USED WITH UNITS EMPLOYING THE TWO BUTTON ARMATURE

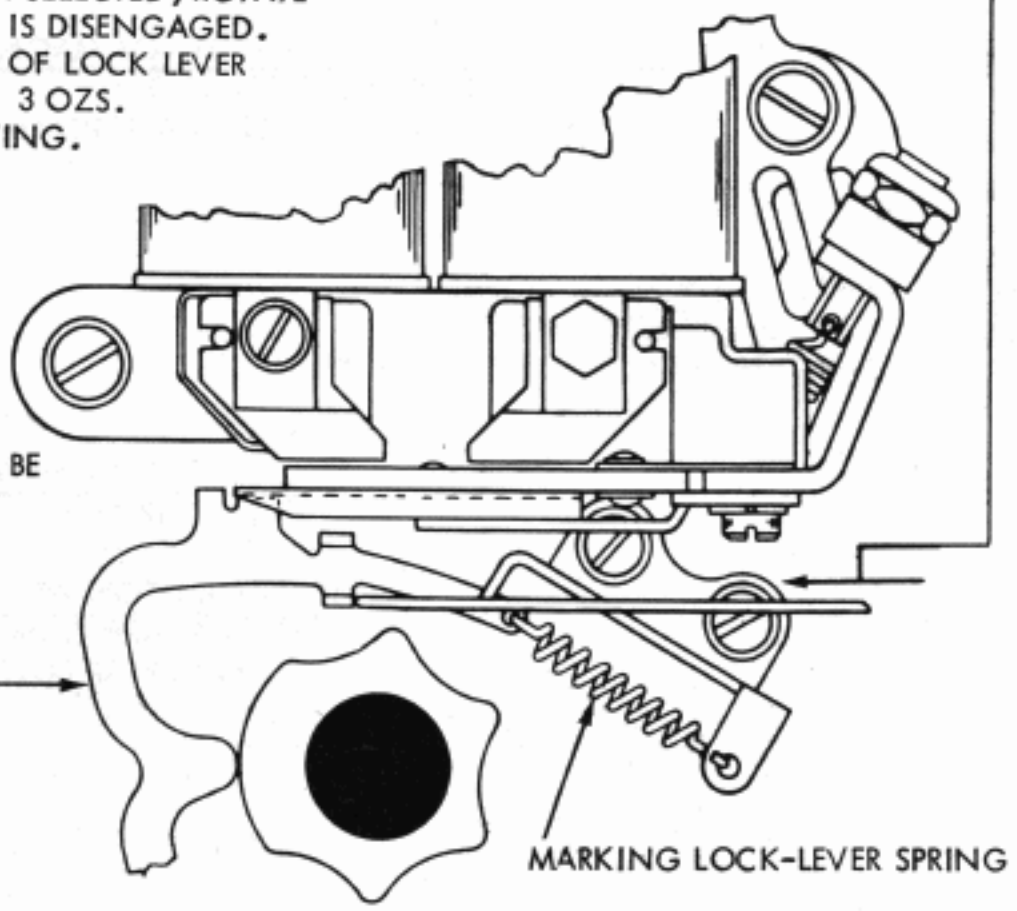

START LEVER SPRING

REQUIREMENT --- WITH LATCH LEVER SPRING UNHOOKED, STOP ARM BAIL IN THE INDENT OF ITS CAM AND RANGE SCALE SET AT 60, IT SHOULD REQUIRE
MIN. 2-1/2 OZS. --------- MAX. 4-1/2 OZS.
TO START STOP ARM MOVING.

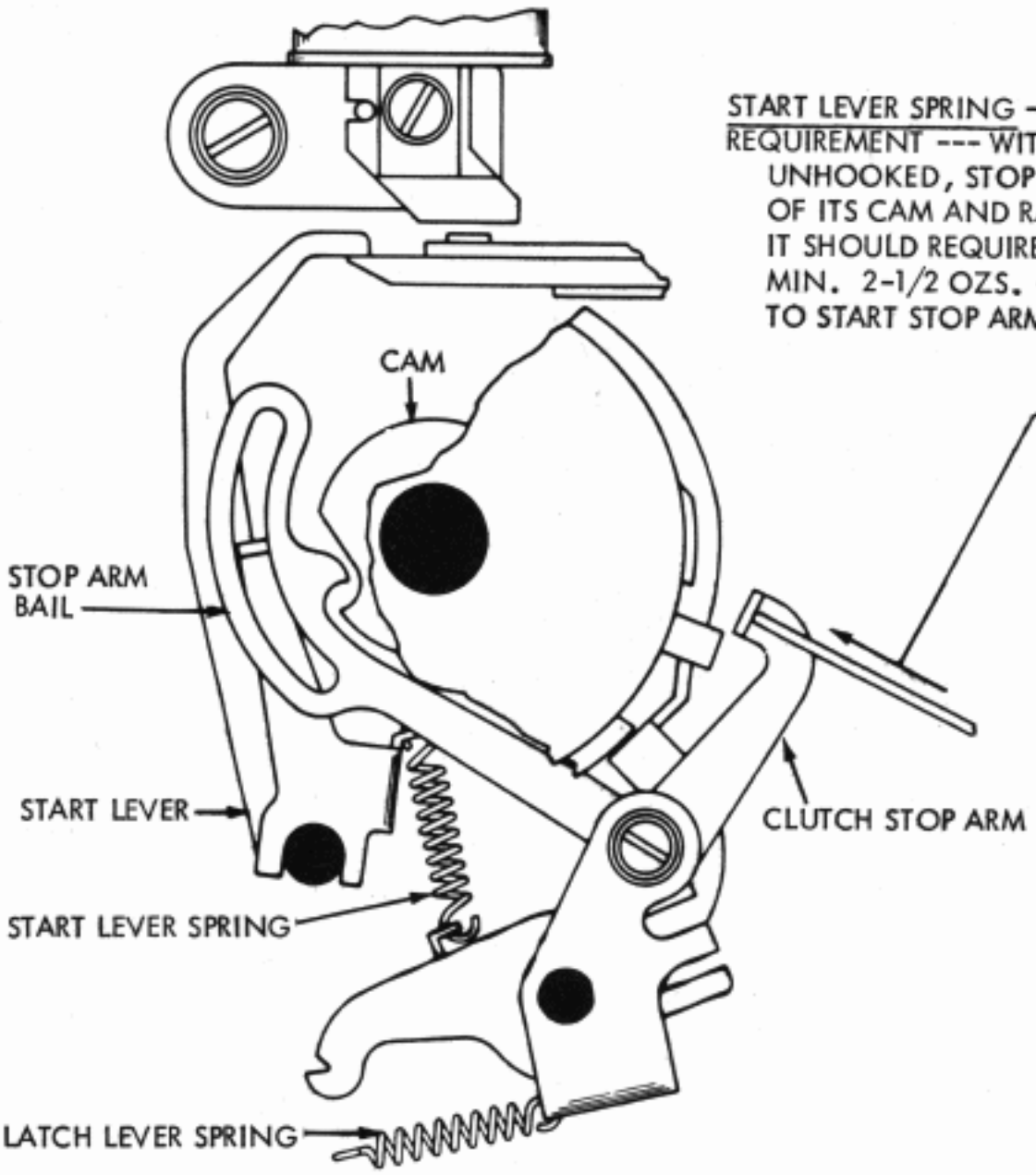

NOTE
FOR EARLIER DESIGN
SEE FIGURE 4-24

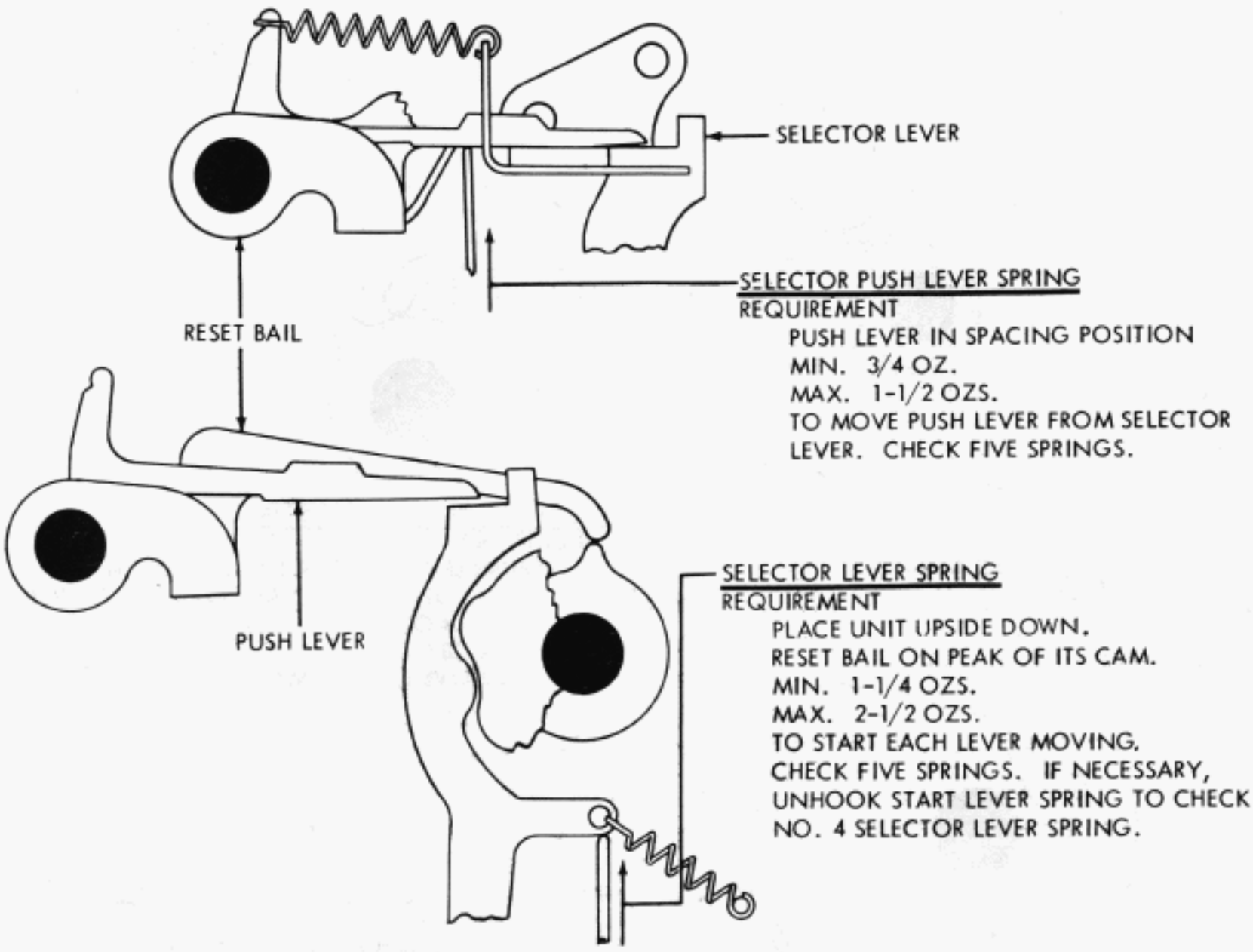

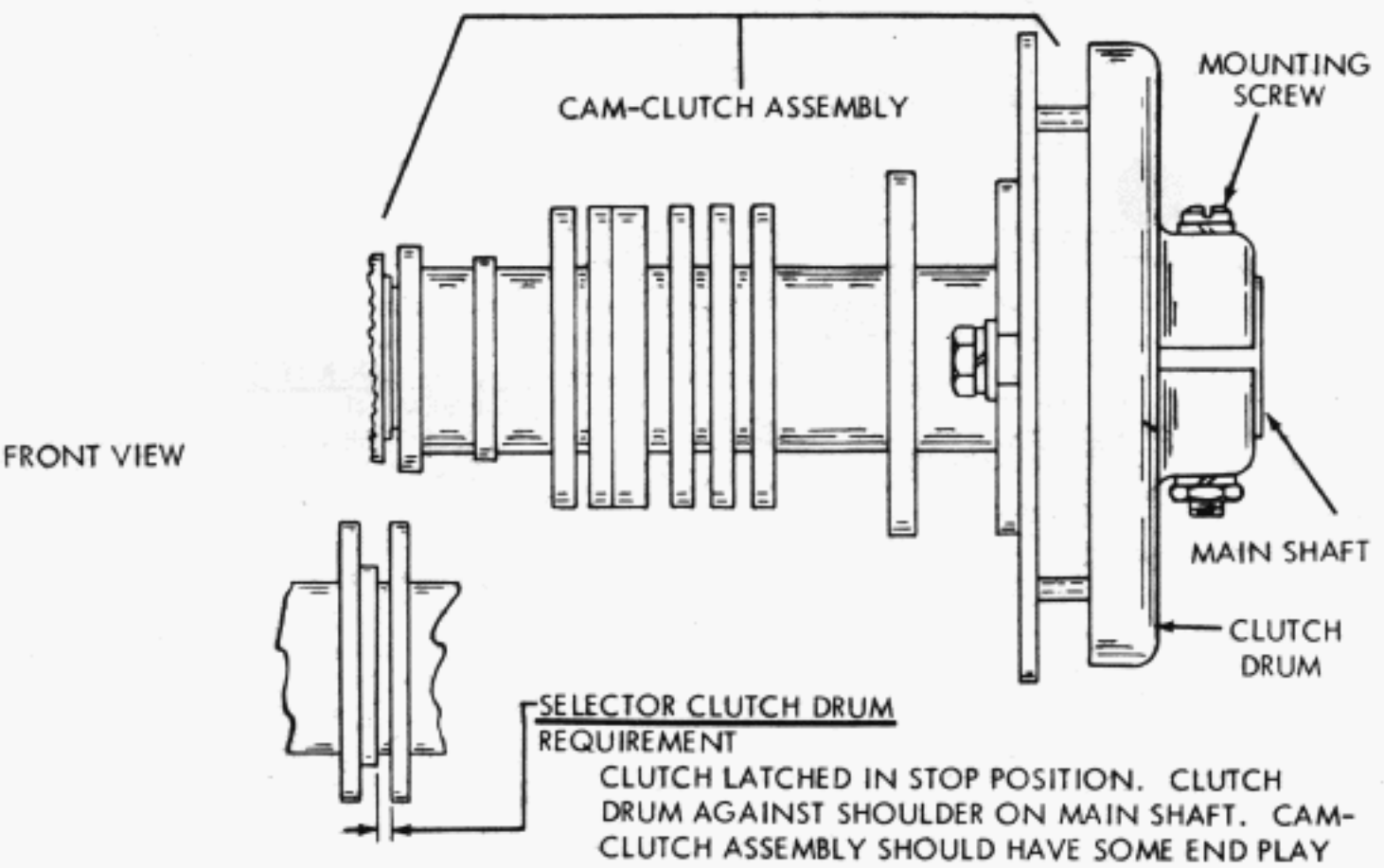

FIGURE 1-20 TYPING UNIT, SELECTOR CAM CLUTCH

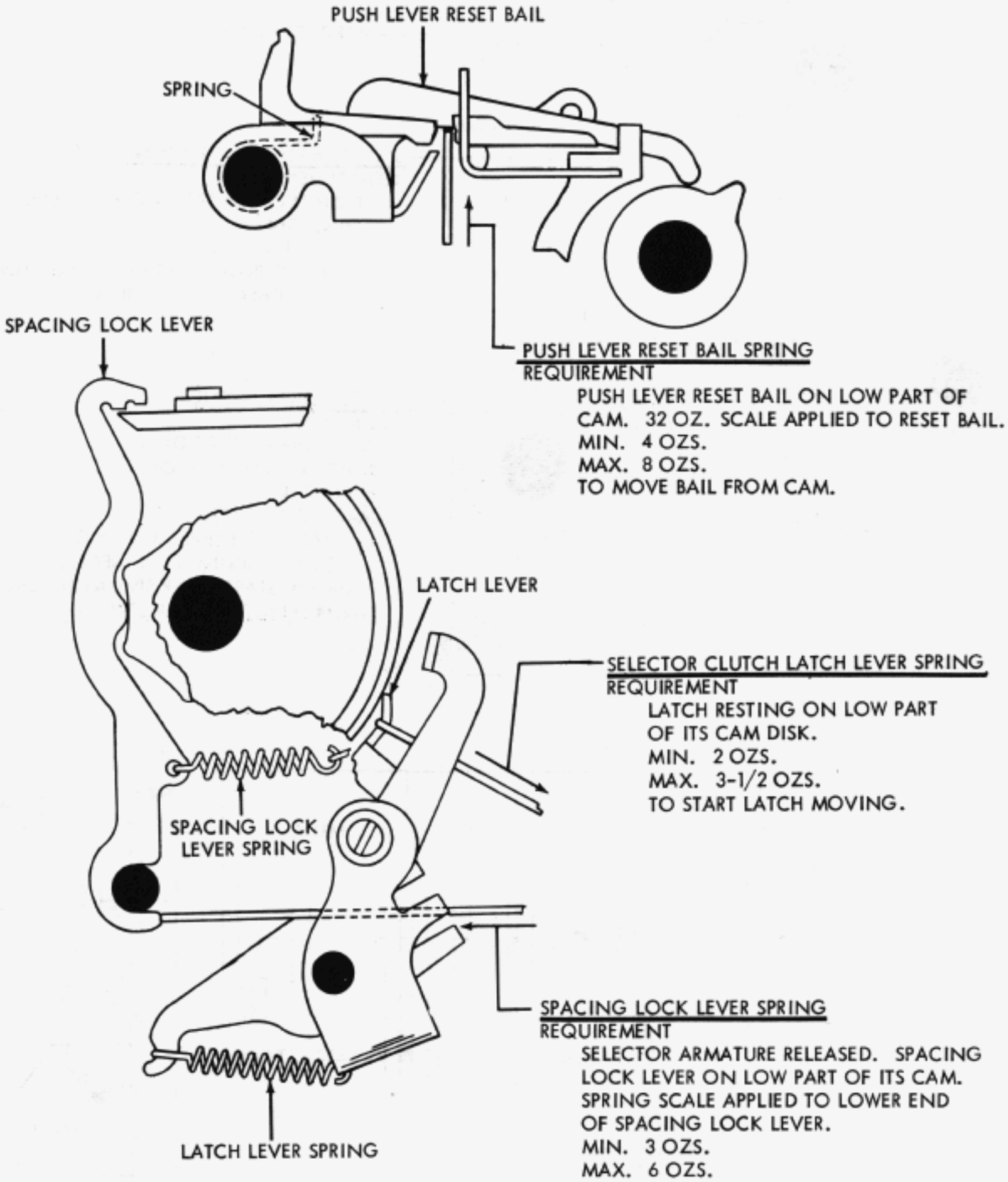

FIGURE 1-21. TYPING UNIT, SELECTOR CLUTCH MECHANISM, RIGHT SIDE VIEW

NOTE: REPLACE RANGE FINDER AND SELECTOR MAGNET ASSEMBLY.

(A) RANGE FINDER KNOB PHASING

REQUIREMENT

WITH RANGE FINDER KNOB TURNED TO EITHER END OF RACK, ZERO MARK ON SCALE SHOULD BE WITHIN 3 POINTS OF SCRIBED LINE ON RANGE FINDER PLATE.

TO ADJUST

REMOVE MOUNTING NUT, DISENGAGE KNOB FROM RACK AND POSITION KNOB. RE-ENGAGE KNOB WITH RACK AND REPLACE MOUNTING NUT.

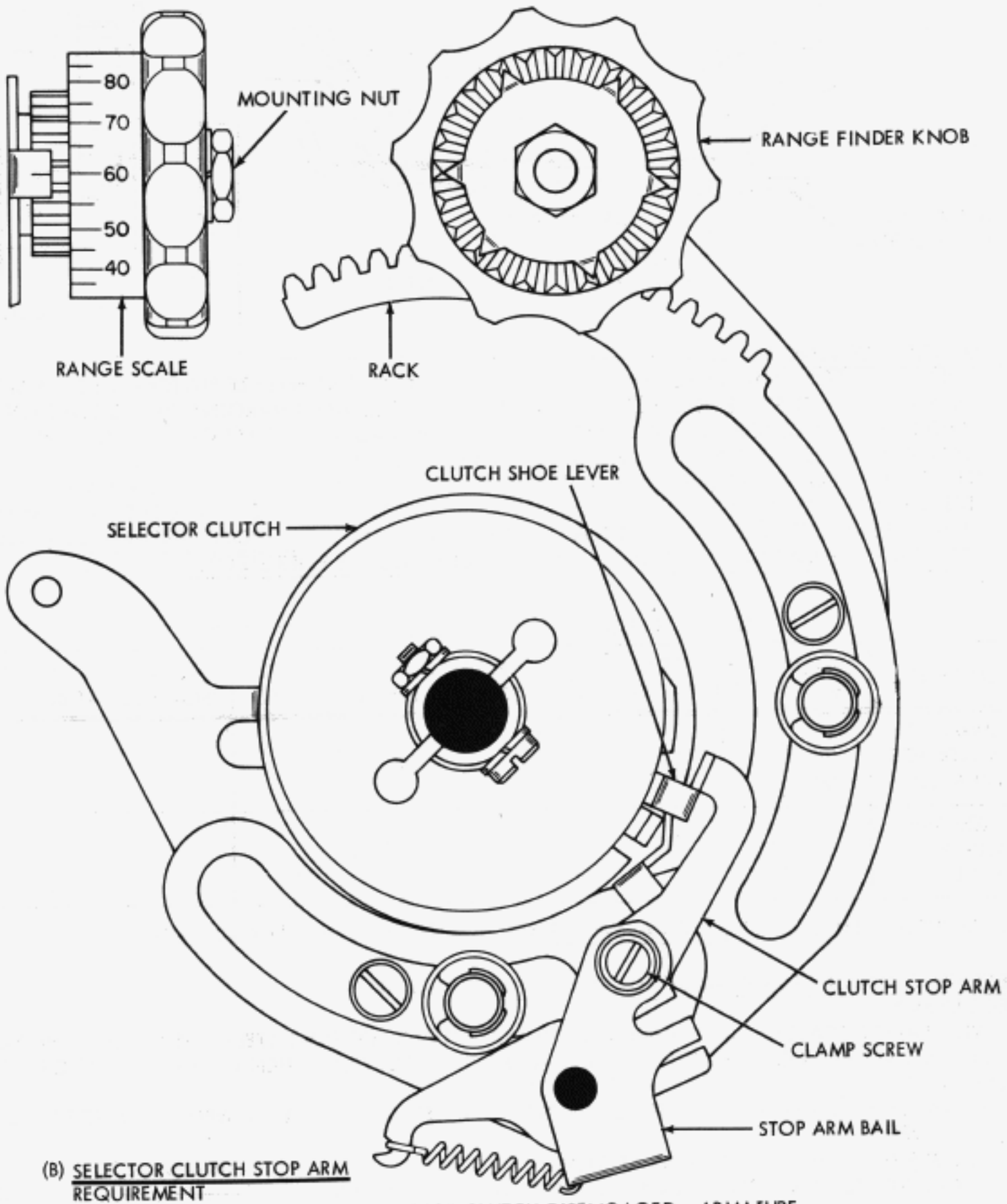

(B) SELECTOR CLUTCH STOP ARM

REQUIREMENT

RANGE SCALE SET AT 60. SELECTOR CLUTCH DISENGAGED. ARMATURE IN MARKING POSITION. CLUTCH STOP ARM SHOULD ENGAGE CLUTCH SHOE LEVER BY APPROXIMATELY FULL THICKNESS OF SHOE LEVER.

TO ADJUST

POSITION STOP ARM ON STOP ARM BAIL WITH CLAMP SCREW LOOSENED.

FIGURE 1-22. TYPING UNIT, RANGE FINDER MECHANISM, RIGHT SIDE

NOTE

ARMATURE WITH TWO ANTI-FREEZE BUTTONS, FRONT BUTTON MUST CONTACT ITS CORE WHEN MAGNETS ARE ENERGIZED

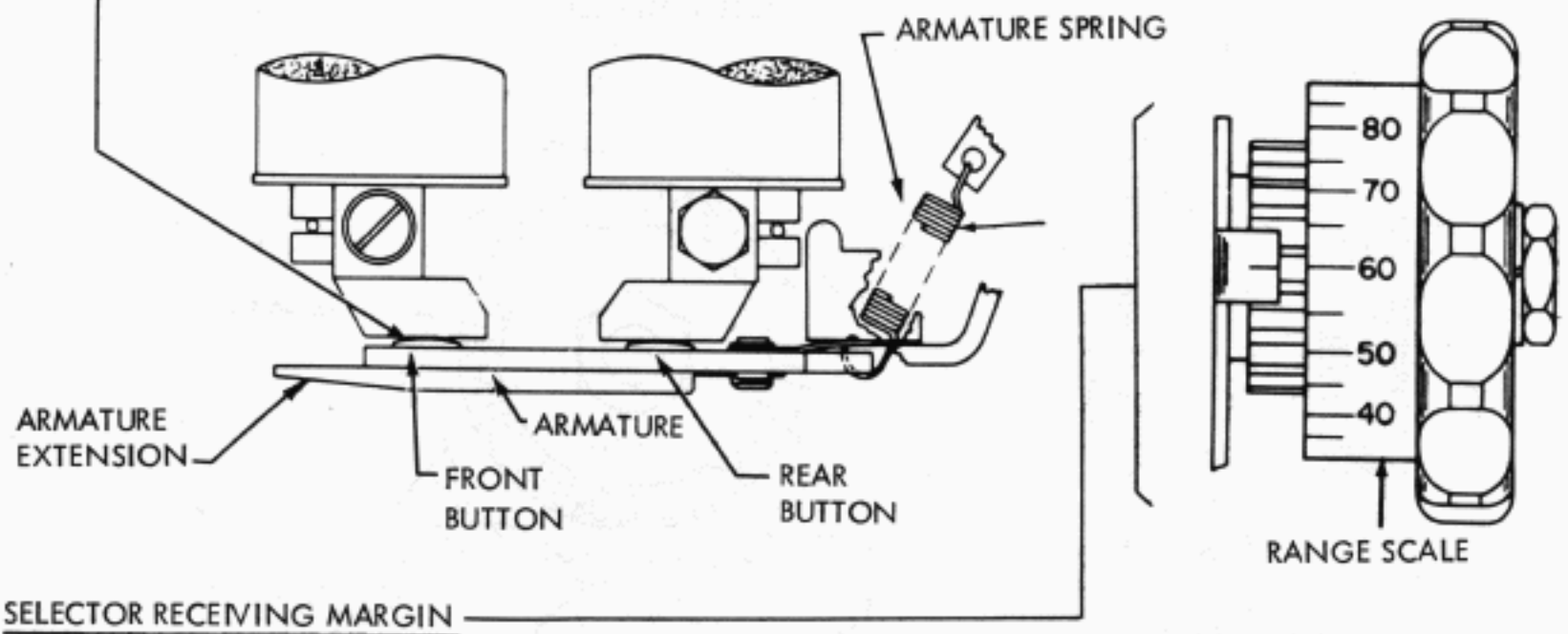

SELECTOR RECEIVING MARGIN

REQUIREMENT (FOR UNITS EMPLOYING ARMATURE WITH ONE ANTI-FREEZE BUTTON) WHEN A SIGNAL DISTORTION TEST SET IS USED FOR DETERMINING THE RECEIVING MARGINS OF THE SELECTOR, AND WHERE THE CONDITION OF THE COMPONENTS IS EQUIVALENT TO THAT OF NEW EQUIPMENT, THE RANGE AND DISTORTION TOLERANCES BELOW SHOULD BE MET.

REQUIREMENT (FOR UNITS EMPLOYING ARMATURE WITH TWO ANTI-FREEZE BUTTONS) WHEN A DISTORTION TEST SET IS AVAILABLE, THE SELECTOR ARMATURE SPRING TENSION SHOULD BE REFINED, IF NECESSARY, TO MEET THE SELECTOR RECEIVING MARGINS. THE FRONT ANTI-FREEZE BUTTON MUST CONTACT THE MAGNET CORE WHEN THE MAGNET COILS ARE ENERGIZED.

SELECTOR RECEIVING MARGIN MINIMUM REQUIREMENTS

CURRENT	SPEED WPM	POINTS RANGE (ZERO DISTORTION)	PERCENT MARKING AND SPACING BIAS TOLERATED	END DISTORTION TOLERATED (SCALE SET AT BIAS OPTIMUM)
0.060 AMP. (WINDINGS PARALLEL)	60 75 100	72	40	35
0.020 AMP. (WINDINGS SERIES)	60 75	72	40	35

TO ADJUST: REFINE THE SELECTOR ARMATURE SPRING (SEE FIGURES 1-19 AND 1-25).

RECEIVING MARGIN FOR DUAL SPEED OPERATION (60 AND 100 WPM)

REQUIREMENT

WITH RANGE SCALE SET AT COMMON OPTIMUM SETTING FOR DUAL SPEED OPERATION, THE PAGE PRINTER SHOULD ACCEPT SIGNALS WITH 35% BIAS AND END DISTORTION WHEN OPERATED AT 60 OR 100 WPM.

TO ADJUST

1. BIAS SELECTOR BETWEEN LIMITS OF 0% TO -7% INTERNAL BIAS AT 100 WPM. (DO NOT READJUST FOR 60 WPM).
2. OBTAIN RECEIVING MARGINS AT 60 AND 100 WPM.
3. CALCULATE COMMON OPTIMUM BIAS SETTING AS FOLLOWS: $O_c = \frac{UMB_{100} + LSB_{60}}{2}$ WHERE

O_c = COMMON OPTIMUM BIAS SETTING

UMB_{100} = UPPER ORIENT LIMIT MARKING BIAS AT 100 WPM

LSB_{60} = LOWER ORIENT LIMIT SPACING BIAS AT 60 WPM

FIGURE 1-23 TYPING UNIT, SELECTOR CLUTCH MECHANISM, RIGHT SIDE VIEW

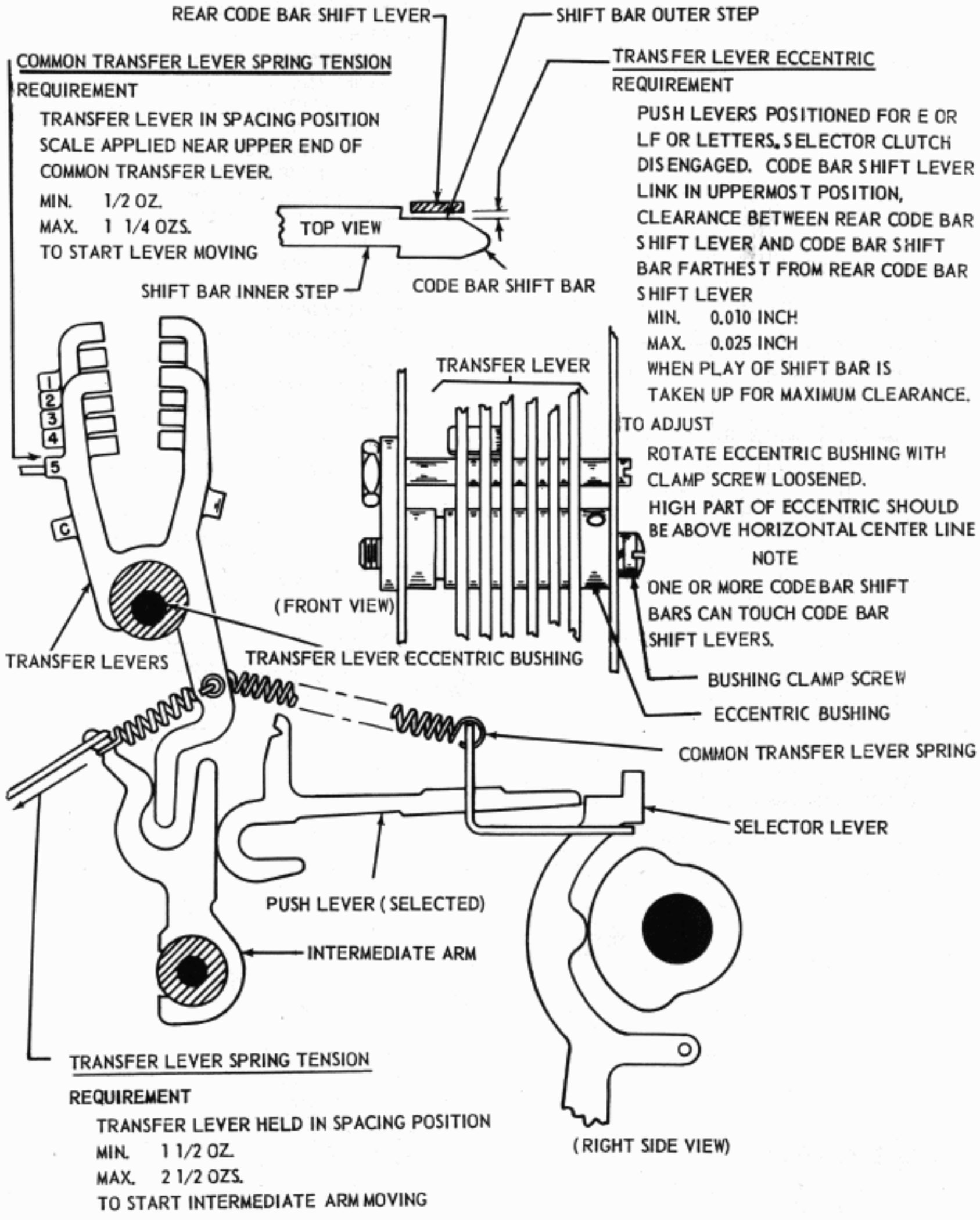

FIGURE 1-24. TYPING UNIT, CODE BAR SHIFT MECHANISM

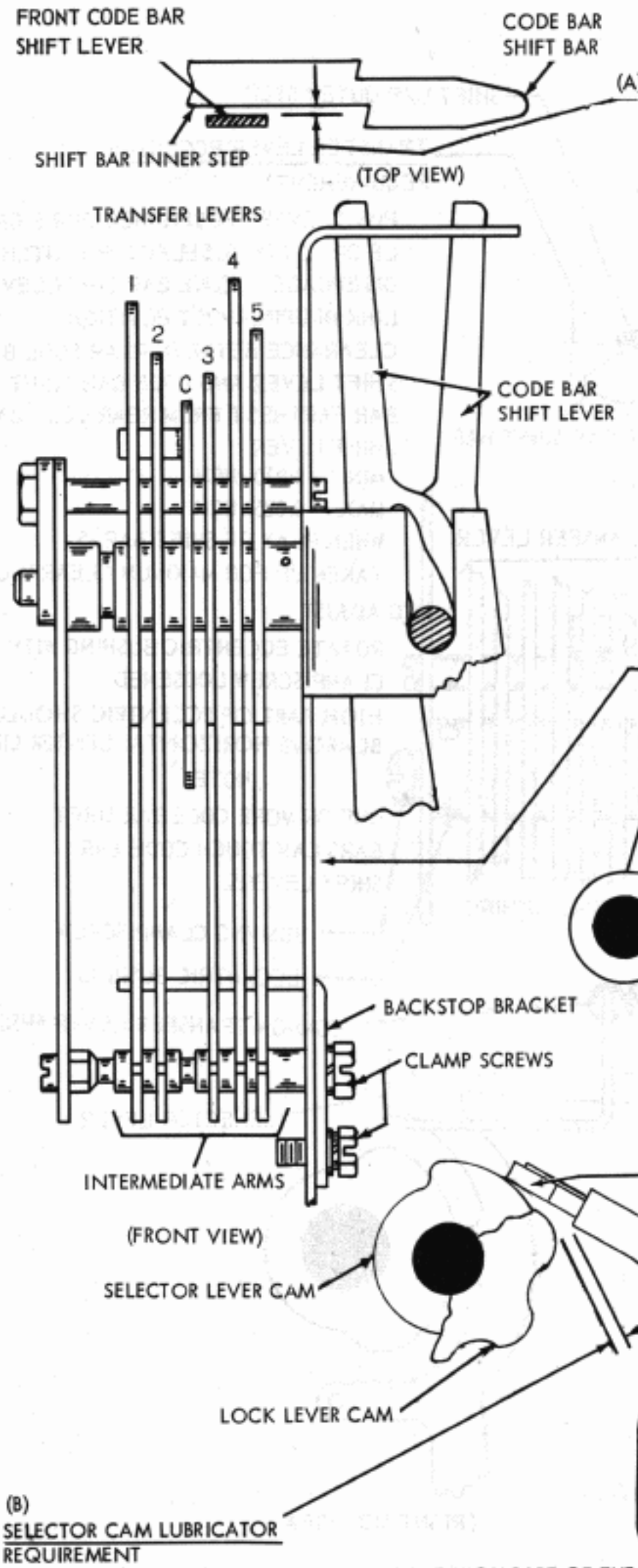

(A) INTERMEDIATE ARM BACKSTOP BRACKET

REQUIREMENT

PUSH LEVERS NOT SELECTED. ALL CODE BAR SHIFT BARS TO THE RIGHT. SELECTOR CLUTCH DISENGAGED. CODE BAR SHIFT LEVER LINK IN LOWERMOST POSITION. CLEARANCE BETWEEN FRONT CODE BAR SHIFT LEVER AND INNER STEP OF CODE BAR SHIFT BAR FARTHEST FROM FRONT CODE BAR SHIFT LEVER

MIN. 0.010 INCH

MAX. 0.025 INCH

WHEN PLAY IN PARTS IS TAKEN UP FOR MAXIMUM CLEARANCE.

TO ADJUST

POSITION BACKSTOP BRACKET WITH ITS TWO CLAMP SCREWS LOOSENED.

(B)

SELECTOR CAM LUBRICATOR

REQUIREMENT

THE LUBRICATOR TUBE SHOULD CLEAR THE HIGH PART OF THE LOCK LEVER CAM

MIN. 0.020 INCH

THE HIGH PART OF THE SELECTOR LEVER CAMS SHOULD TOUCH THE LUBRICATOR WICK, BUT SHOULD NOT RAISE IT MORE THAN 1/32 INCH.

NOTE: THERE SHOULD BE SOME CLEARANCE BETWEEN THE MARKING LOCK LEVER SPRING AND THE RESERVOIR.

TO ADJUST

POSITION THE LUBRICATOR BRACKET WITH ITS MOUNTING SCREWS LOOSENED.

FIGURE 1-25 TYPING UNIT, CODE BAR SHIFT MECHANISM

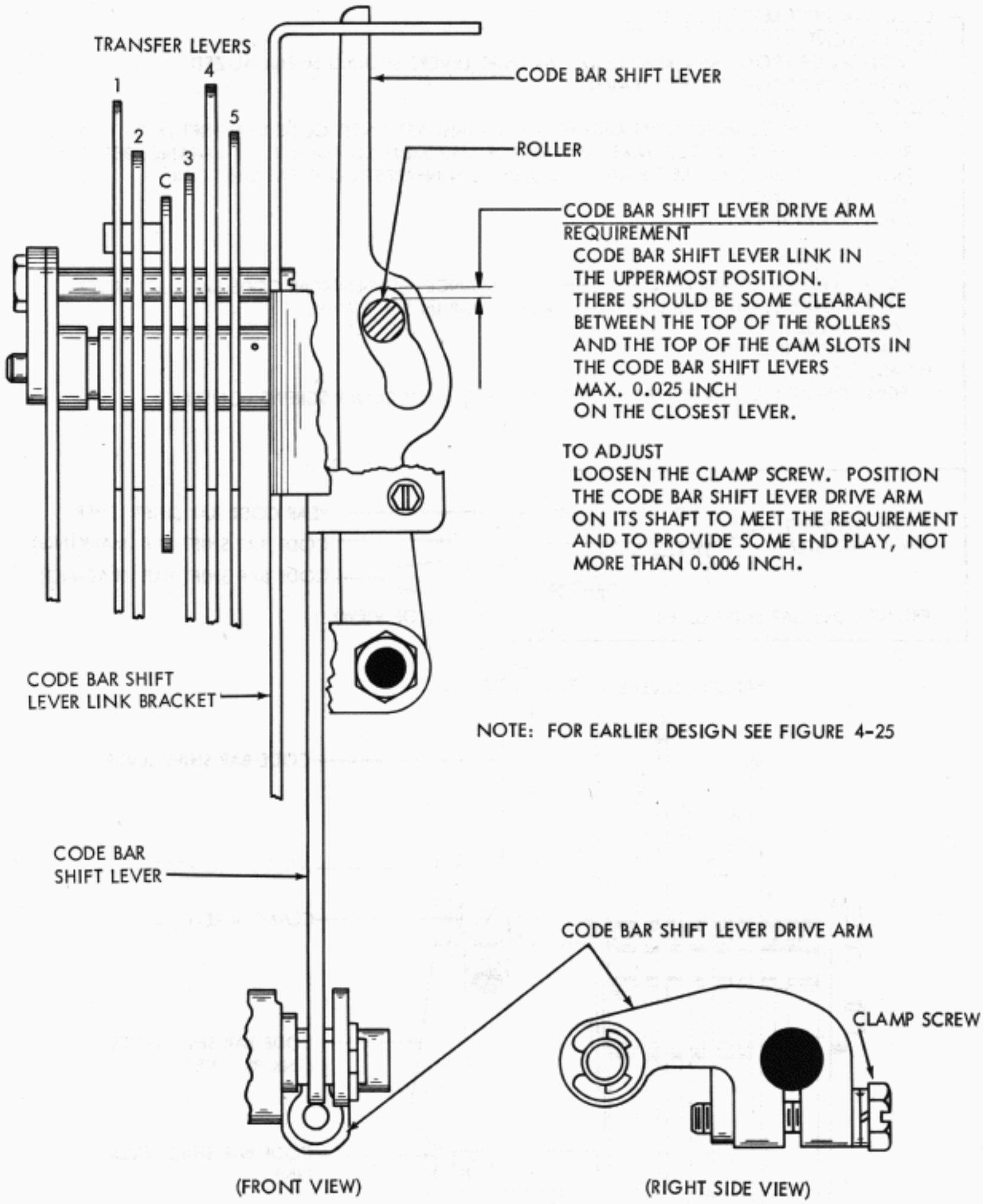

FIGURE 1-26 TYPING UNIT, CODE BAR SHIFT MECHANISM

CODE BAR SHIFT LEVER LINK BRACKET

REQUIREMENT

MOTION OF FRONT AND REAR CODE BAR SHIFT LEVERS SHOULD BE EQUALIZED WITH RESPECT TO CODE BAR TRAVEL.

TO CHECK (FRONT)

SELECT BLANK COMBINATION AND ROTATE MAINSHAFT UNTIL CODE BAR SHIFT LEVER LINK REACHES HIGHEST TRAVEL. TAKE UP PLAY FOR MAXIMUM CLEARANCE. CLEARANCE BETWEEN FRONT CODE BAR SHIFT LEVER AND SHOULDER ON NEAREST CODE BAR SHIFT BAR

MIN. 0.002 INCH

MAX. 0.025 INCH

TO CHECK (REAR)

SELECT LETTERS COMBINATION. CHECK CLEARANCE BETWEEN REAR CODE BAR SHIFT LEVER AND SHOULDER ON NEAREST CODE BAR SHIFT BAR IN SAME WAY.

MIN. 0.002 INCH

MAX. 0.025 INCH

TO ADJUST

POSITION ADJUSTING PLATES (FRONT AND REAR) WITH CLAMP SCREWS LOOSENED.

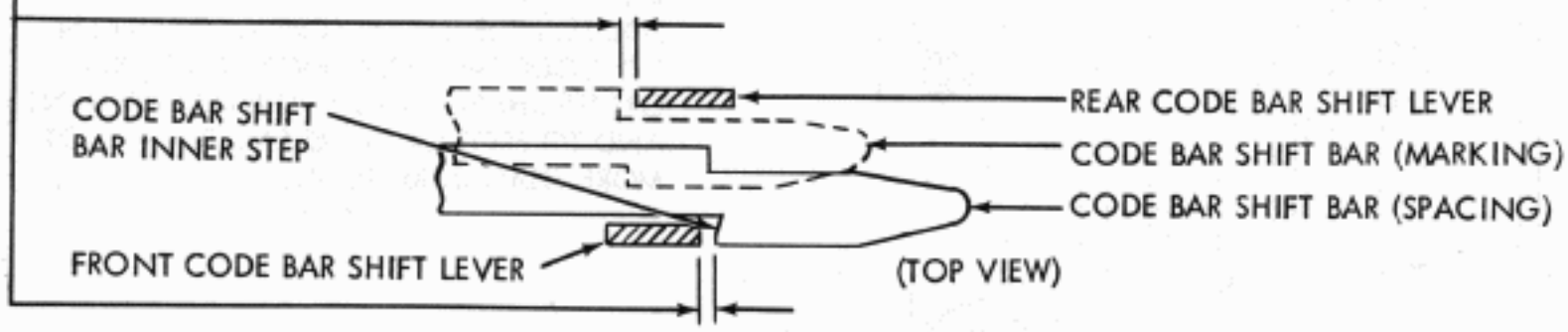

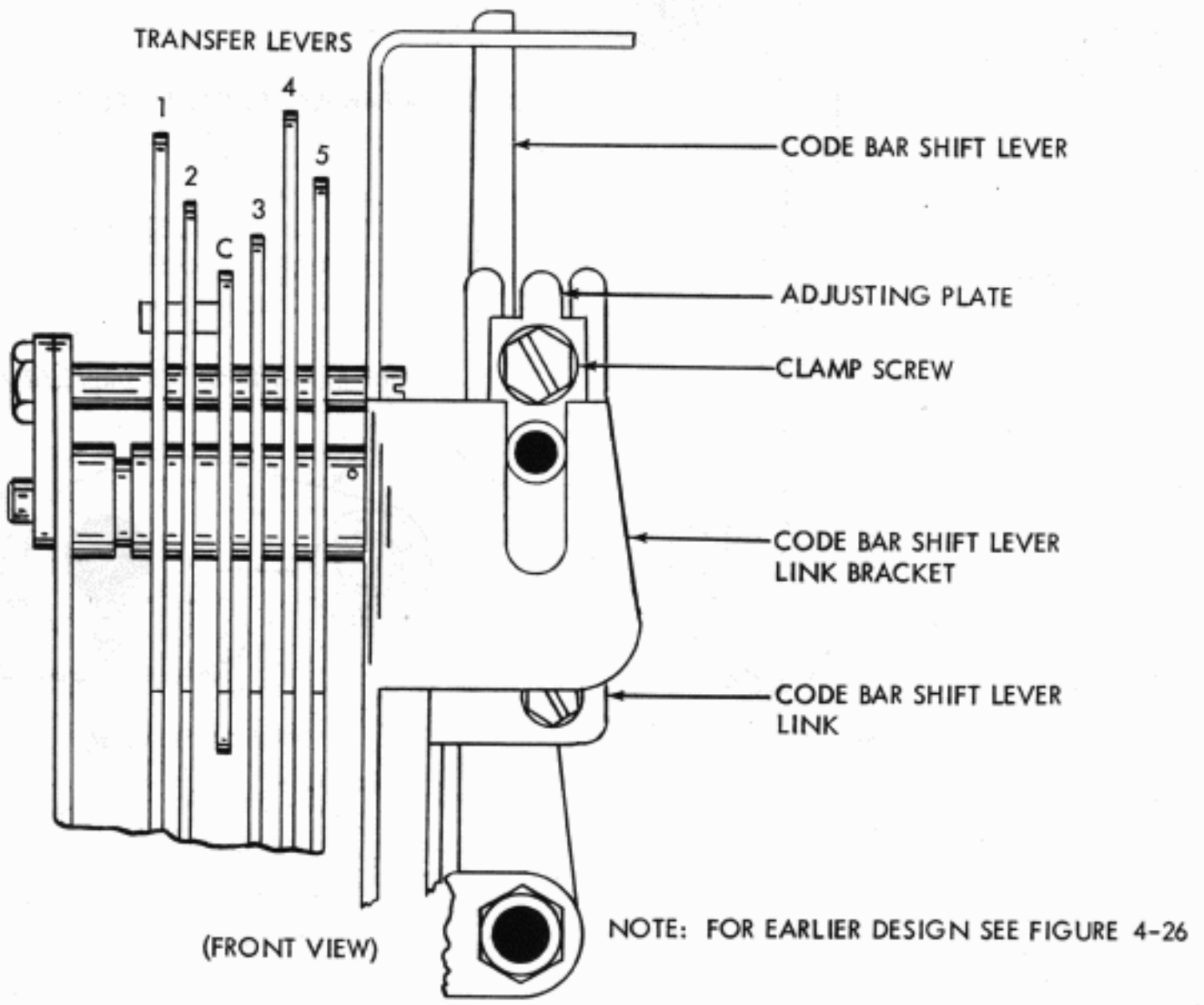

FIGURE 1-27. TYPING UNIT, CODE BAR SHIFT MECHANISM

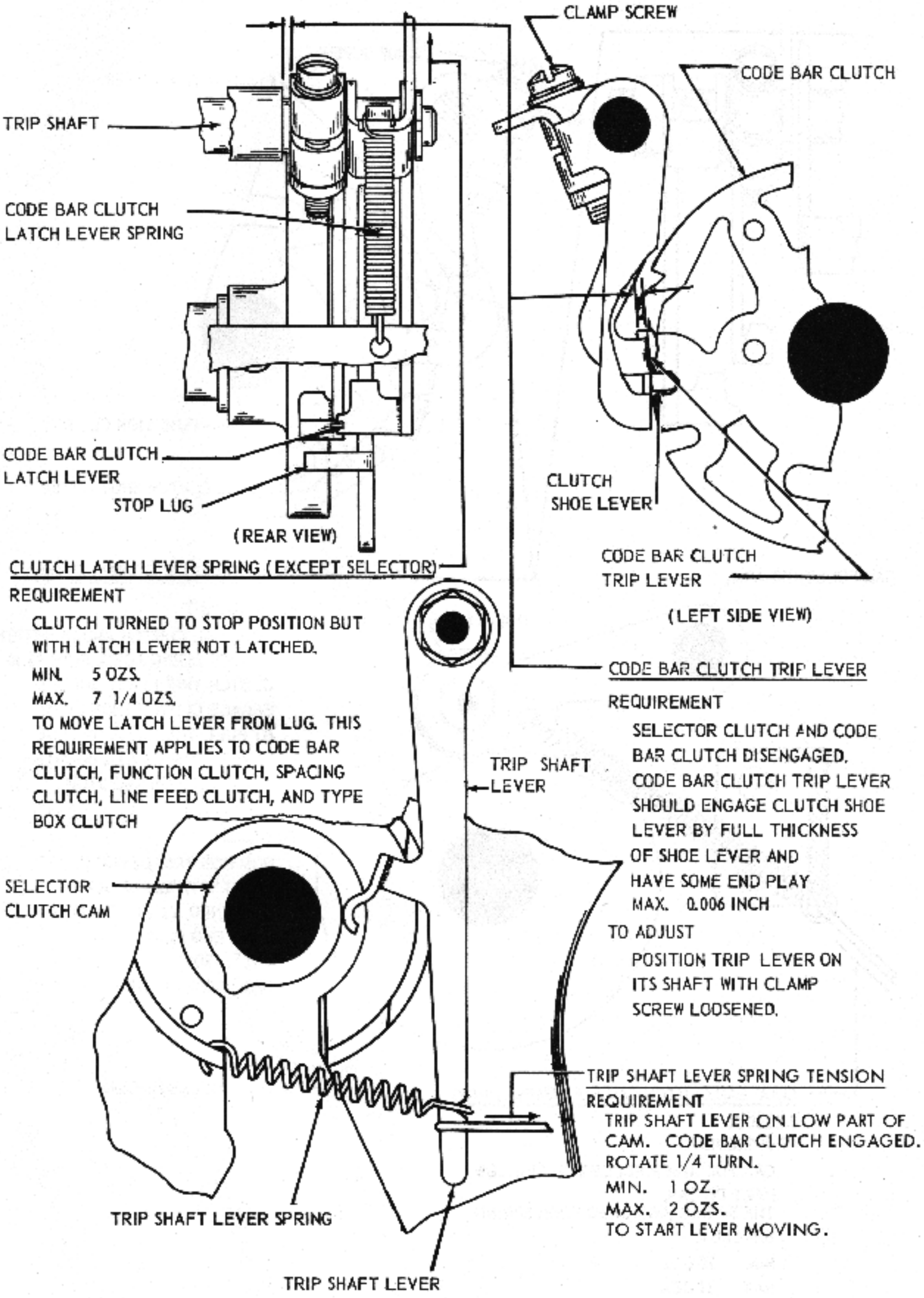

FIGURE 1-28. TYPING UNIT, CLUTCH MECHANISM AND CODE BAR CLUTCH TRIP SHAFT MECHANISM

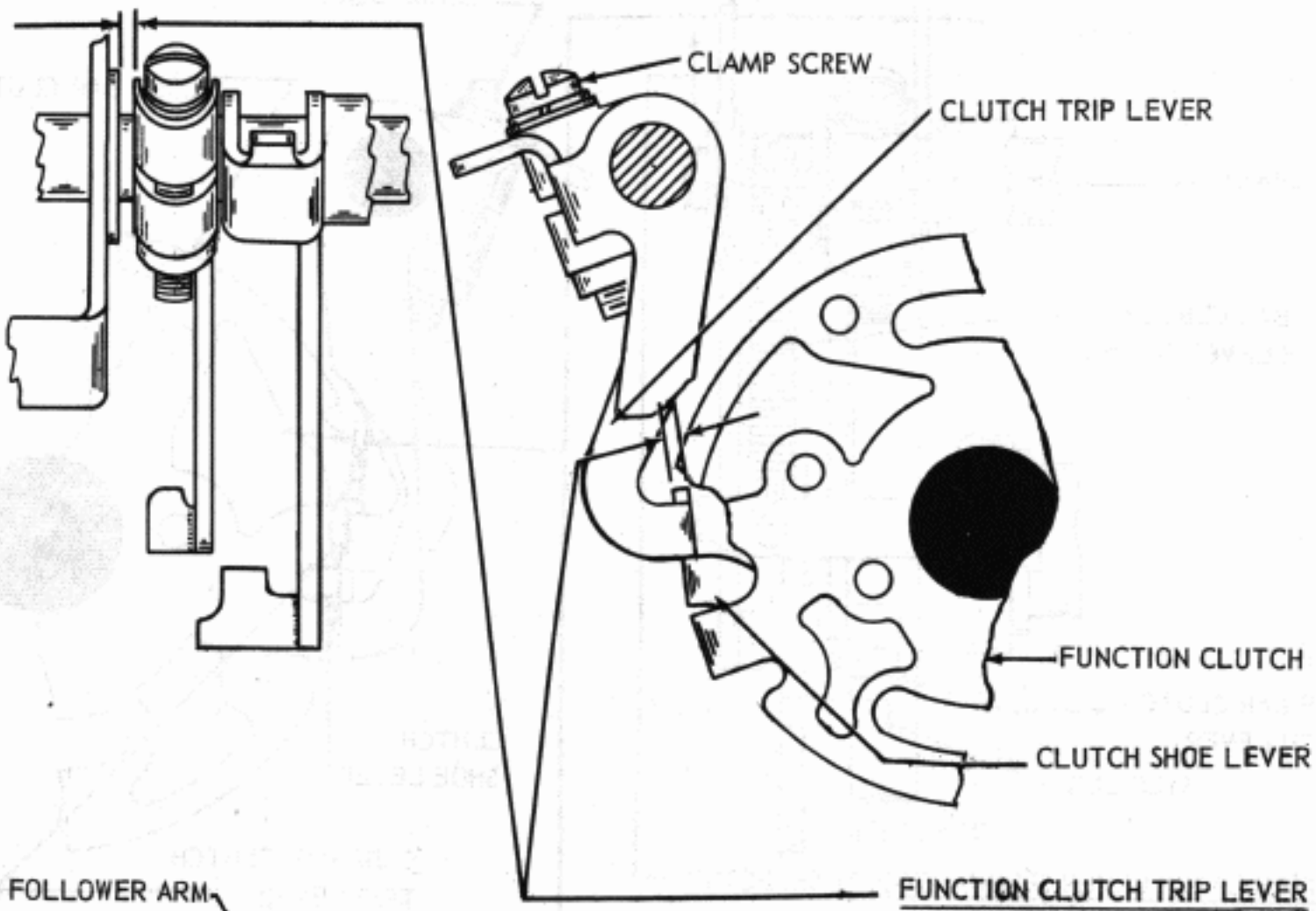

FUNCTION CLUTCH TRIP LEVER

REQUIREMENT

CODE BAR CLUTCH AND FUNCTION CLUTCH DISENGAGED, FUNCTION CLUTCH TRIP LEVER SHOULD ENGAGE CLUTCH SHOE LEVER BY FULL THICKNESS OF SHOE LEVER. (CHECK AT LUG WITH LEAST BITE ON TWO STOP CLUTCHES)

TO ADJUST

POSITION TRIP LEVER ON ITS SHAFT WITH CLAMP SCREW LOOSENED, LETTING SHAFT HAVE END PLAY

MIN. SOME
MAX. 0.006 INCH

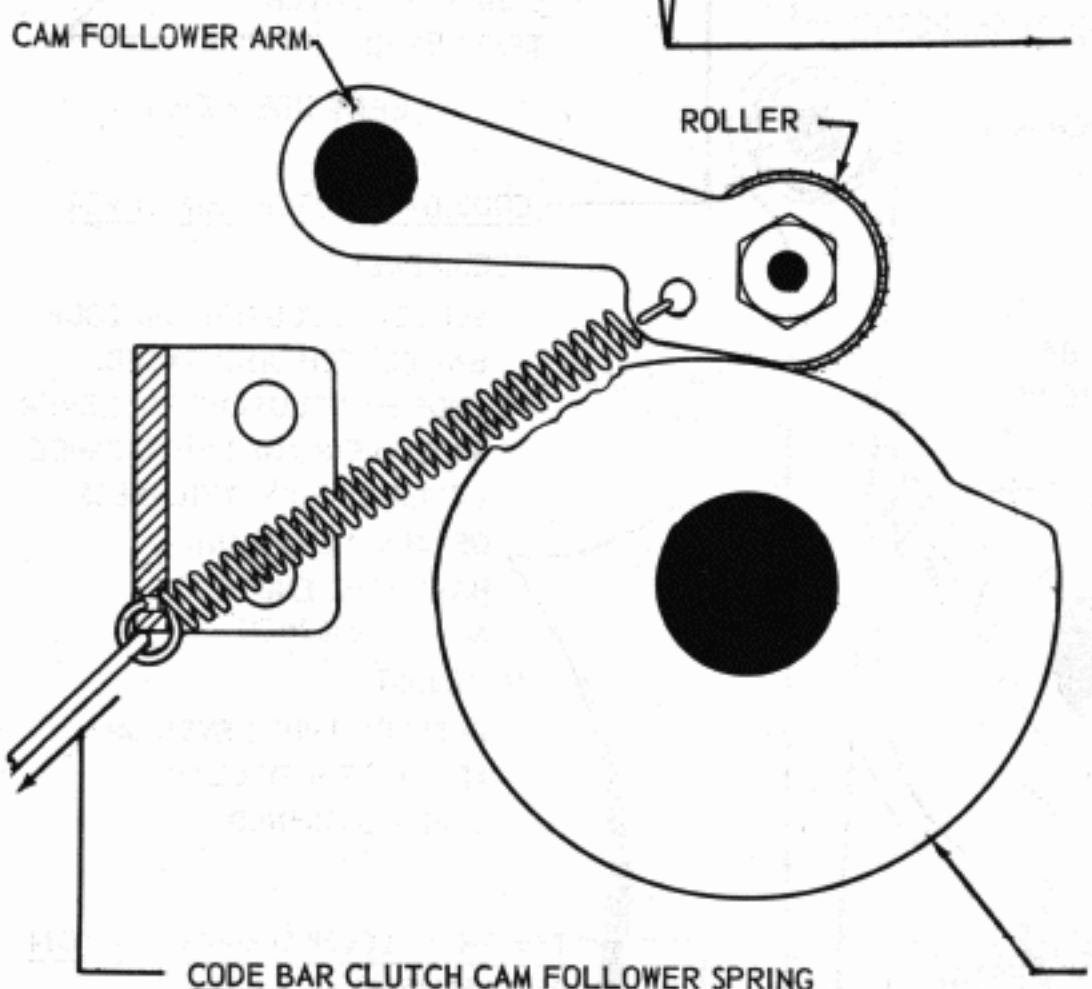

CODE BAR CLUTCH CAM FOLLOWER SPRING TENSION

REQUIREMENT

CAM FOLLOWER ROLLER ON THE LOW PART OF CAM.
THE SPRING UNHOOKED FROM SPRING BRACKET.

MIN. 20 OZS.
MAX. 24 OZS.
TO PULL SPRING TO INSTALLED LENGTH.

1-29. TYPING UNIT, FUNCTION CLUTCH MECHANISM

(A) CLUTCH TRIP SHAFT SET COLLARS

(1) REQUIREMENT

SPACING CUT-OUT LEVER SHOULD HAVE SIDE PLAY

MIN. SOME
MAX. 0.008 INCH

TO ADJUST

POSITION SPACING CUT-OUT LEVER SET COLLAR

NOTE: FOR EARLIER DESIGN SEE FIGURE 4-26A.

(2) REQUIREMENT

APPROXIMATE ALIGNMENT OF RIGHT END OF STOP EXTENSIONS ON TRIP LEVER AND SHOE LEVER.

TO ADJUST

POSITION LINE FEED CLUTCH TRIP LEVER SET COLLAR.

(3) REQUIREMENT

LINE FEED CLUTCH LATCH LEVER SHOULD HAVE SIDE PLAY.

MIN. SOME
MAX. 0.008 INCH

TO ADJUST

POSITION LINE FEED CLUTCH LATCH LEVER SET COLLAR.

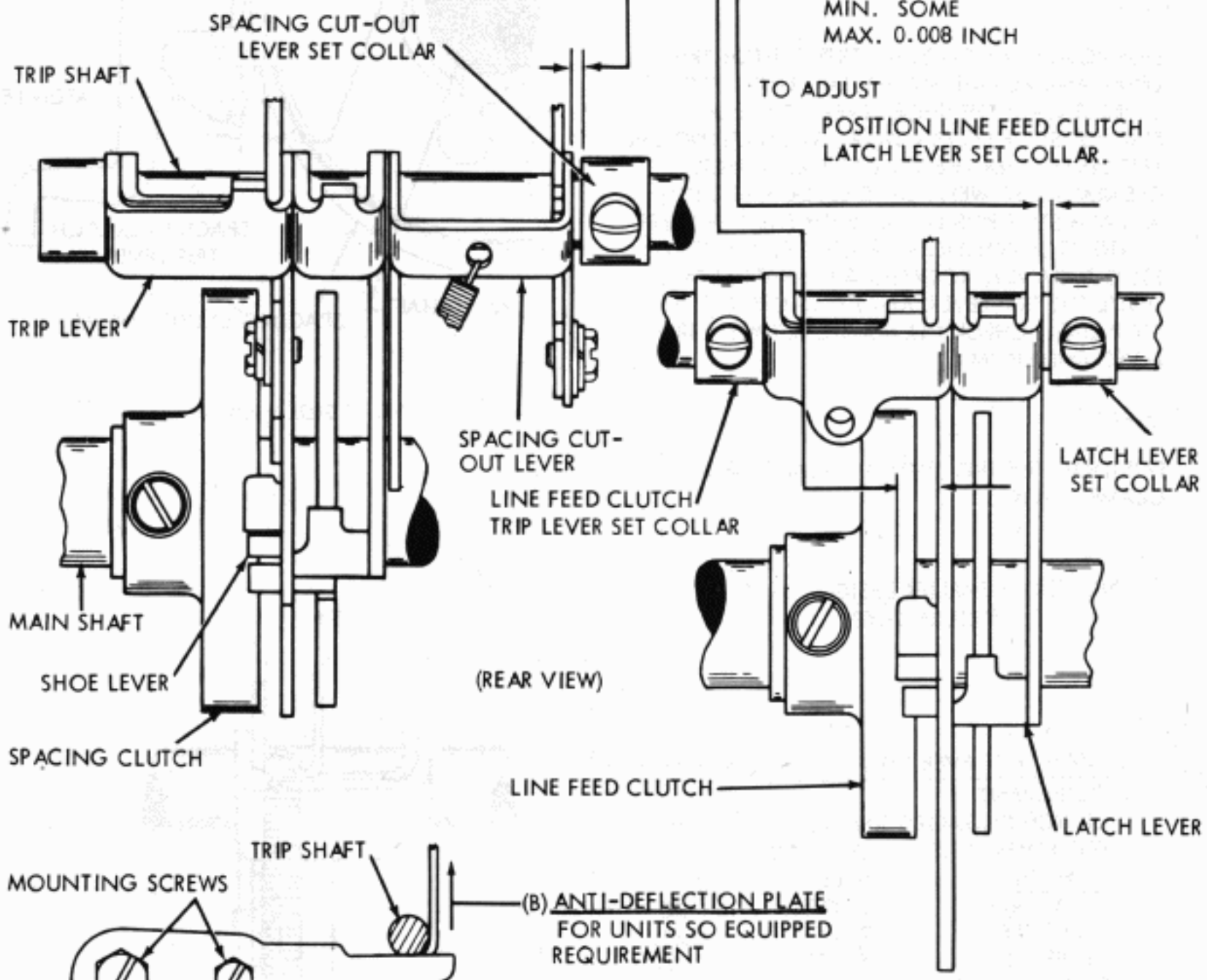

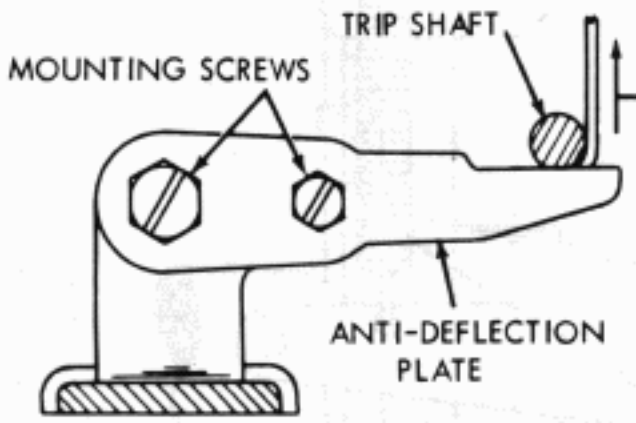

(LEFT SIDE VIEW, UPSIDE DOWN)

(B) ANTI-DEFLECTION PLATE FOR UNITS SO EQUIPPED

REQUIREMENT

WITH TYPING UNIT UPSIDE DOWN AND FUNCTION, SPACING, LINE FEED, AND TYPE BOX CLUTCHES DISENGAGED AND LATCHED

MIN. 1 LB. MAX. 5 LBS.

TO PULL TRIP SHAFT AWAY FROM ANTI-DEFLECTION PLATE

TO ADJUST

POSITION PLATE WITH MOUNTING SCREWS LOOSENED.

FIGURE 1-30. TYPING UNIT, TRIP SHAFT MECHANISM

SPACING CLUTCH TRIP LEVER

REQUIREMENT

CLEARANCE BETWEEN TRIP LEVER AND CLUTCH DRUM SHOULD BE 0.018 TO 0.035 INCH LESS THAN CLEARANCE BETWEEN SHOE LEVER AND DRUM AT STOP SHOWING GREATEST CLEARANCE. THERE SHOULD BE SOME OVERBITE ON ALL STOP LUGS. GAUGE BY EYE.

TO CHECK

DISENGAGE THE CLUTCH. TRIP CLUTCH TRIP LEVER AND ROTATE MAIN SHAFT UNTIL TRIP LEVER IS OVER THE SHOE LEVER. TAKE UP PLAY OF SHOE LEVER INWARD BY SNAPPING THE TRIP LEVER OVER THE SHOE LEVER. CHECK CLEARANCE BETWEEN SHOE LEVER AND DRUM AT EACH STOP POSITION. WITH THE TRIP LEVER AT THE STOP POSITION WHICH YIELDS GREATEST CLEARANCE, ROTATE MAIN SHAFT SLOWLY UNTIL THE TRIP LEVER JUST FALLS OFF THE STOP LUG. CHECK CLEARANCE BETWEEN TRIP LEVER AND DRUM.

TO ADJUST

POSITION THE TRIP LEVER BY MEANS OF ITS CLAMP SCREW.

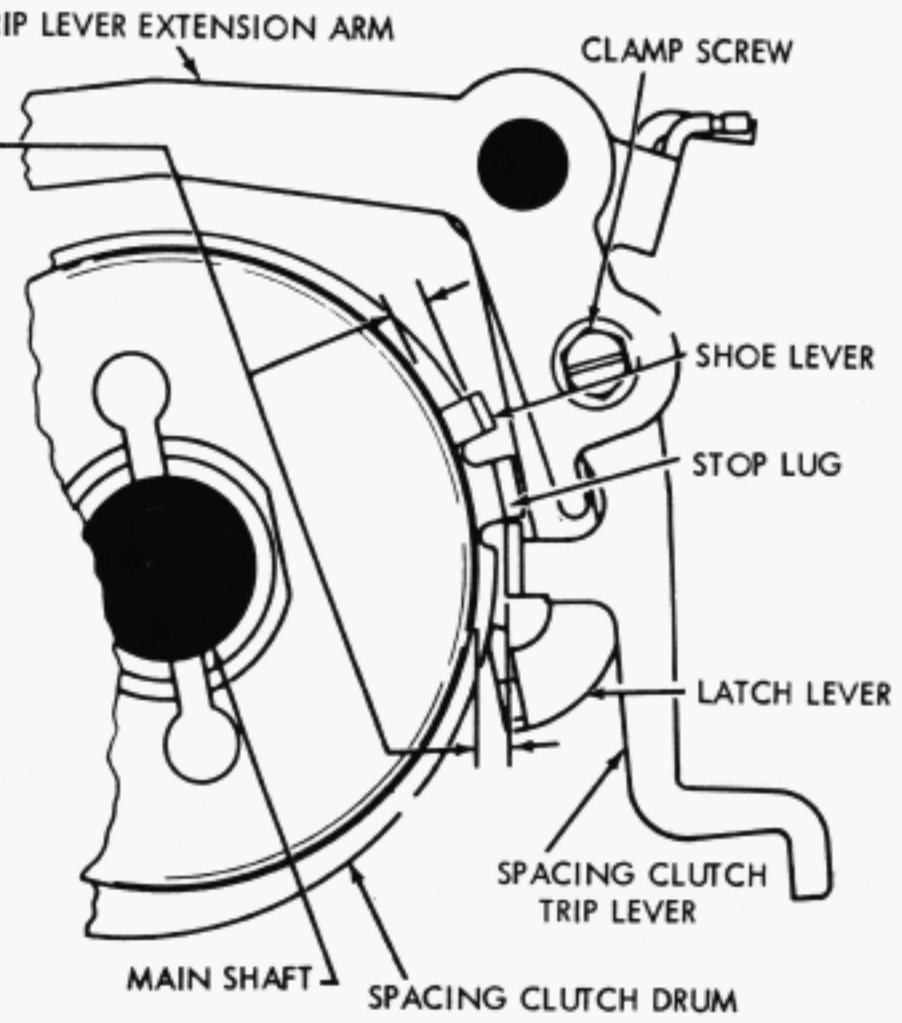

(RIGHT SIDE VIEW)

NOTE: FOR EARLIER DESIGN SEE FIGURE 4-26B.

CLUTCH TRIP LEVER SPRING TENSION

REQUIREMENT

CLUTCH ENGAGED AND ROTATED UNTIL TRIP LEVER RESTS ON STOP LUG

CLUTCH	MIN.	MAX.
SPACING	11 OZS.	16 OZS.
LINE FEED	9 OZS.	12 OZS.
TYPE BOX	5 OZS.	7 1/4 OZS.

TO MOVE LEVER AWAY FROM STOP LUG.

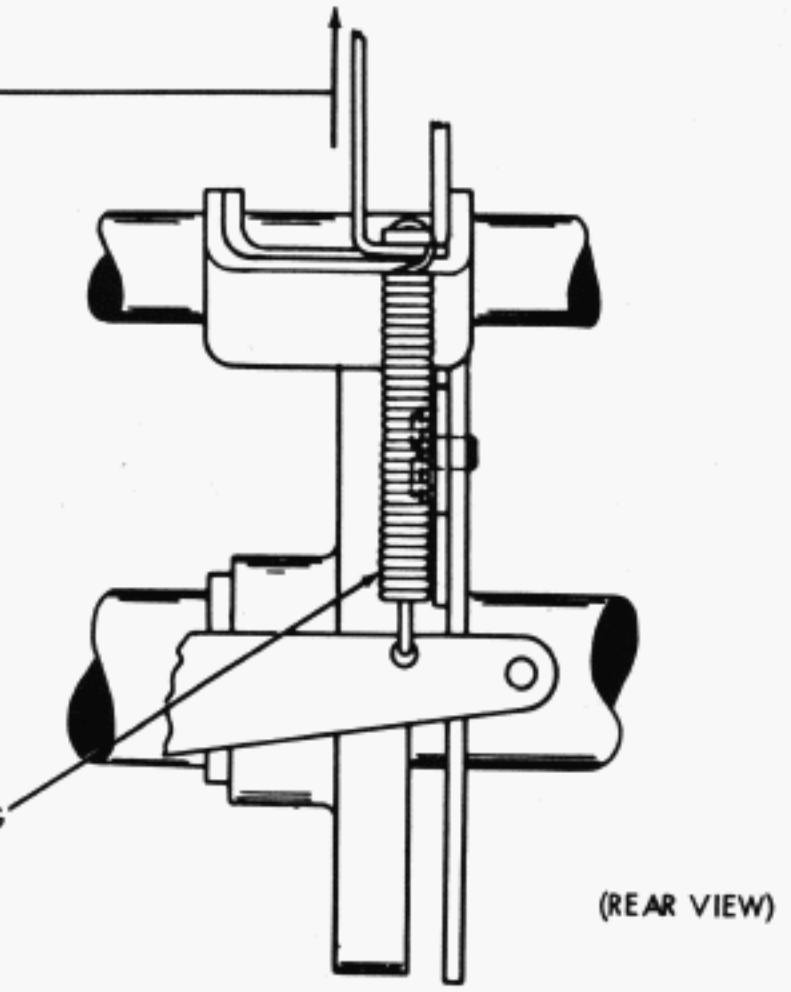

(REAR VIEW)

FIGURE 1-31. TYPING UNIT, SPACING CLUTCH MECHANISM

(A)
TYPE BOX CLUTCH TRIP LEVER ECCENTRIC POST

REQUIREMENT
TYPE BOX CLUTCH DISENGAGED. TRIP LEVER SHOULD ENGAGE THE CLUTCH SHOE LEVER BY THE FULL THICKNESS OF THE SHOE LEVER.

TO ADJUST
POSITION THE TRIP LEVER ECCENTRIC POST.

(C)
LINE FEED CLUTCH TRIP LEVER ADJUSTING SCREW

REQUIREMENT
LINE FEED FUNCTION SLIDE ARM IN REAR POSITION.
CLUTCH TRIP LEVER AGAINST ITS ECCENTRIC POST.
TRIP ARM HELD AGAINST ITS FUNCTION SLIDE ARM.
SOME CLEARANCE BETWEEN THE END OF THE TRIP LEVER ADJUSTING SCREW AND THE TRIP ARM.
MAX. 0.006 INCH

TO ADJUST
POSITION THE ADJUSTING SCREW.

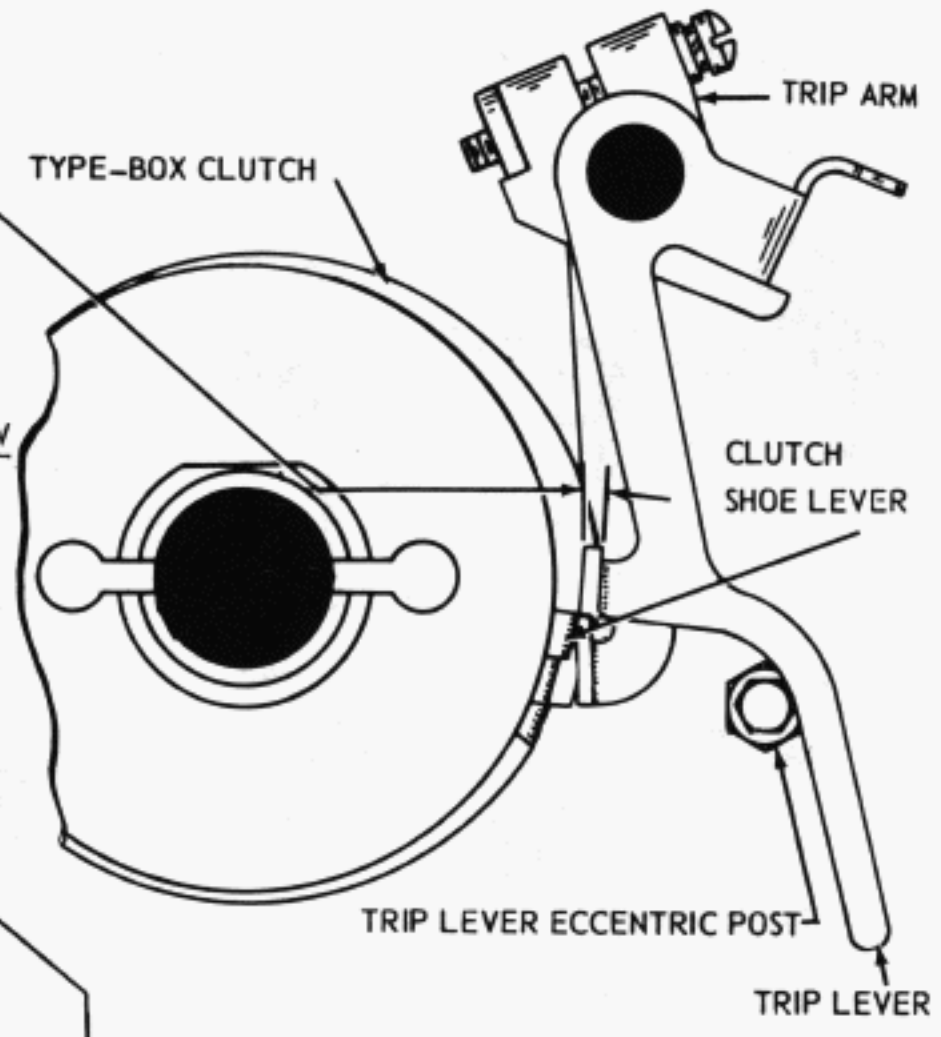

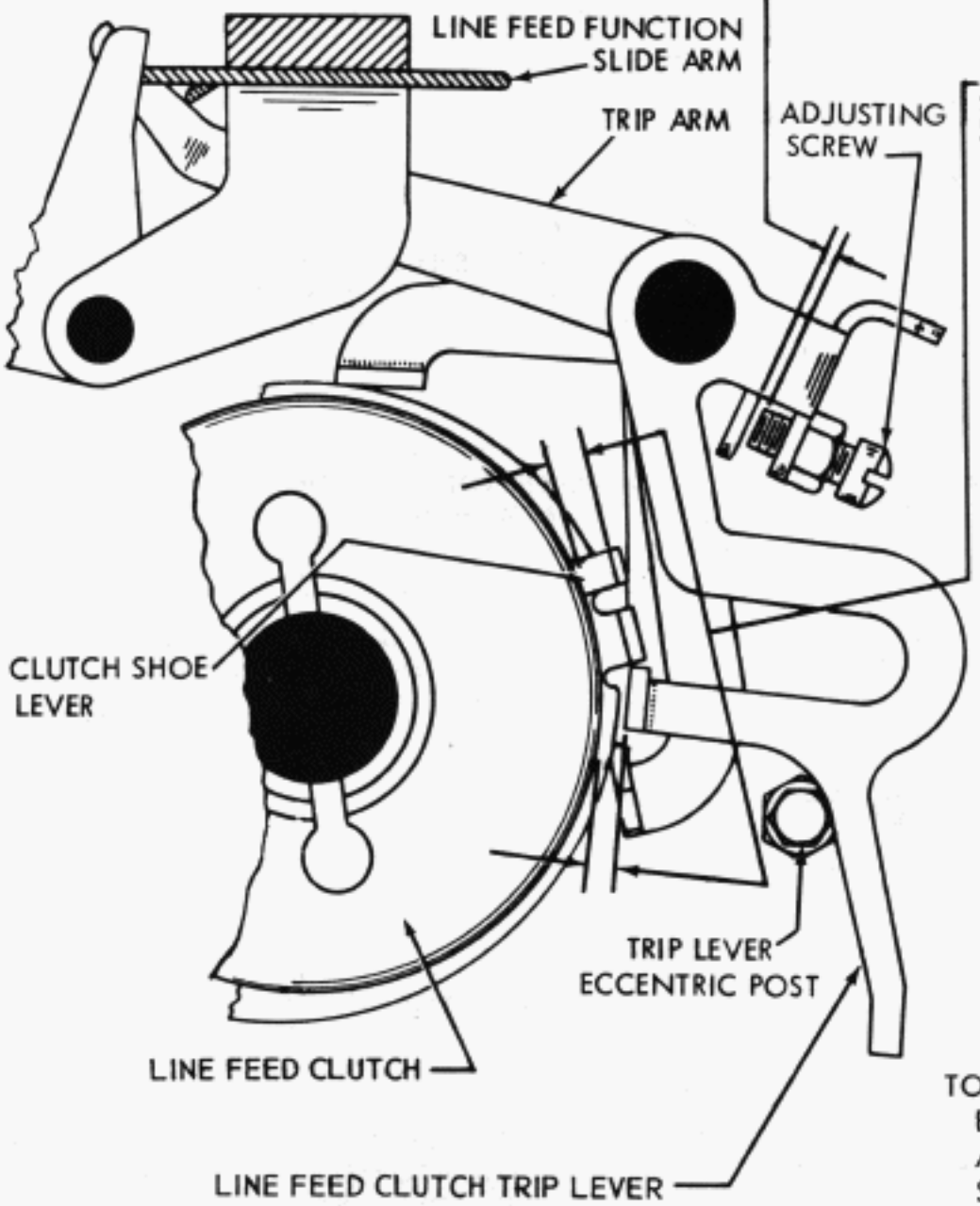

(B)
LINE FEED CLUTCH TRIP LEVER ECCENTRIC POST

REQUIREMENT
CLEARANCE BETWEEN TRIP LEVER AND CLUTCH DRUM SHOULD BE 0.018 TO 0.035 INCH LESS THAN CLEARANCE BETWEEN SHOE LEVER AND DRUM AT STOP WHICH SHOWS GREATEST CLEARANCE. THERE SHOULD BE SOME OVERBITE ON ALL THREE STOP LUGS AS GAUGED BY EYE.

TO CHECK
DISENGAGE THE CLUTCH. TRIP CLUTCH TRIP LEVER AND ROTATE MAIN SHAFT UNTIL TRIP LEVER IS OVER THE SHOE LEVER. TAKE UP PLAY OF SHOE LEVER INWARD BY SNAPPING THE TRIP LEVER OVER THE SHOE LEVER. CHECK CLEARANCE BETWEEN SHOE LEVER AND DRUM AT EACH STOP POSITION. WITH THE TRIP LEVER AT THE STOP POSITION WHICH YIELDS GREATEST CLEARANCE, ROTATE MAIN SHAFT SLOWLY UNTIL THE TRIP LEVER JUST FALLS OFF THE STOP LUG. CHECK CLEARANCE BETWEEN TRIP LEVER AND DRUM.

TO ADJUST
BACK OFF TRIP LEVER ADJUSTING SCREW AND POSITION TRIP LEVER ECCENTRIC STOP POST.

FIGURE 1-32. TYPING UNIT, TYPE BOX CLUTCH AND LINE FEED CLUTCH MECHANISM

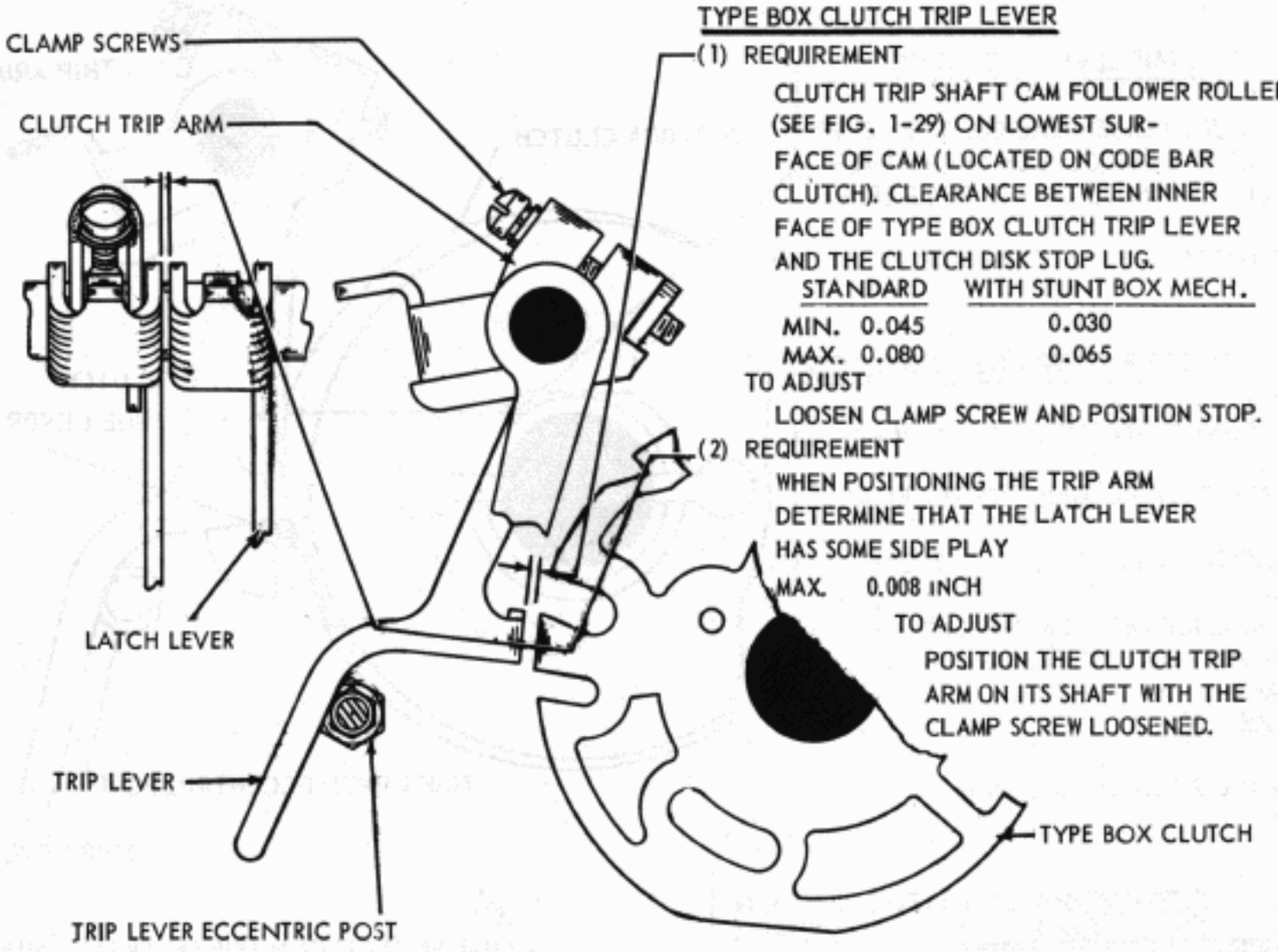

TYPE BOX CLUTCH TRIP LEVER

(1) REQUIREMENT

CLUTCH TRIP SHAFT CAM FOLLOWER ROLLER (SEE FIG. 1-29) ON LOWEST SURFACE OF CAM (LOCATED ON CODE BAR CLUTCH). CLEARANCE BETWEEN INNER FACE OF TYPE BOX CLUTCH TRIP LEVER AND THE CLUTCH DISK STOP LUG.

	STANDARD	WITH STUNT BOX MECH.
MIN.	0.045	0.030
MAX.	0.080	0.065

TO ADJUST

LOOSEN CLAMP SCREW AND POSITION STOP.

(2) REQUIREMENT

WHEN POSITIONING THE TRIP ARM DETERMINE THAT THE LATCH LEVER HAS SOME SIDE PLAY

MAX. 0.008 INCH

TO ADJUST

POSITION THE CLUTCH TRIP ARM ON ITS SHAFT WITH THE CLAMP SCREW LOOSENED.

FIGURE 1-33. TYPING UNIT, TYPE BOX CLUTCH MECHANISM

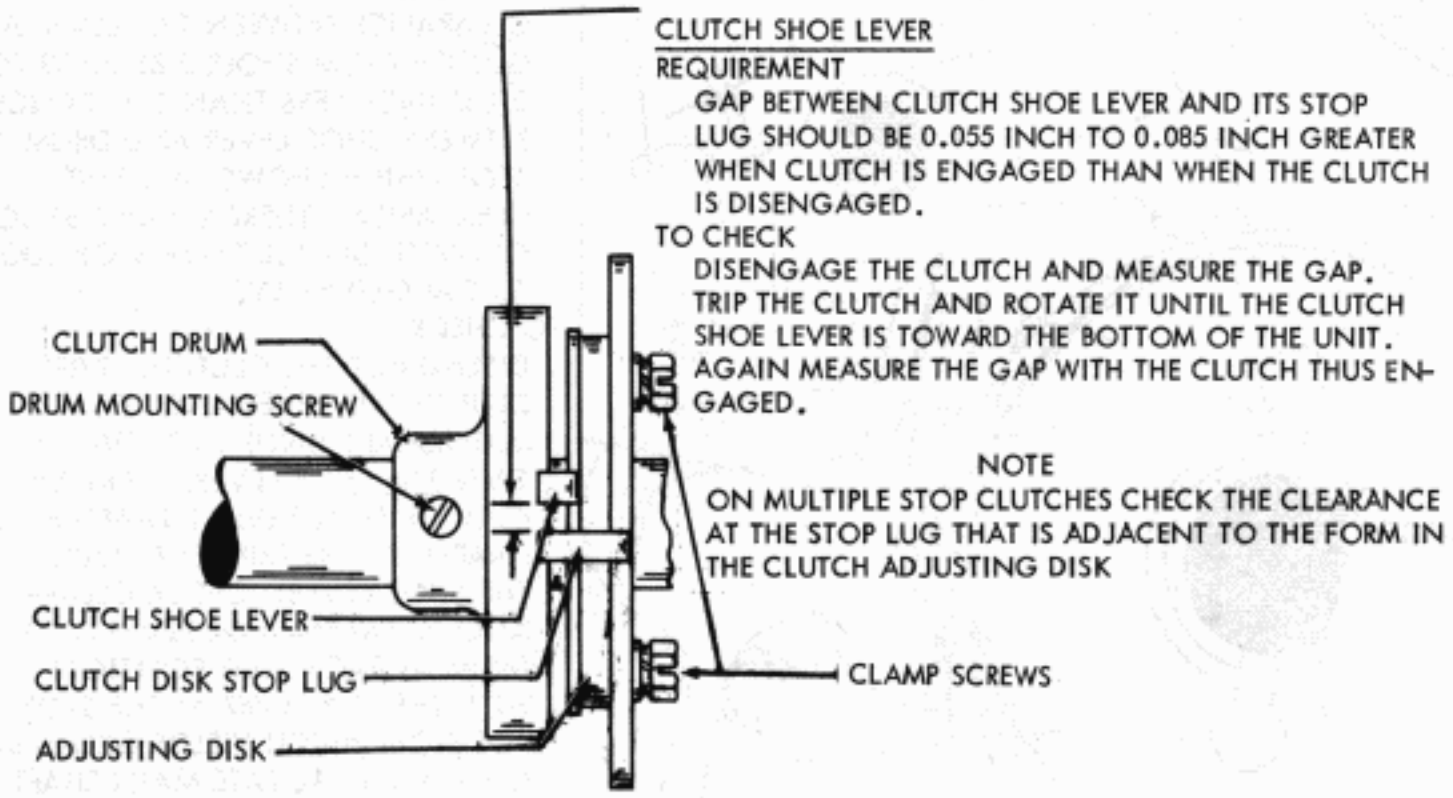

CLUTCH SHOE LEVER

REQUIREMENT

GAP BETWEEN CLUTCH SHOE LEVER AND ITS STOP LUG SHOULD BE 0.055 INCH TO 0.085 INCH GREATER WHEN CLUTCH IS ENGAGED THAN WHEN THE CLUTCH IS DISENGAGED.

TO CHECK

DISENGAGE THE CLUTCH AND MEASURE THE GAP. TRIP THE CLUTCH AND ROTATE IT UNTIL THE CLUTCH SHOE LEVER IS TOWARD THE BOTTOM OF THE UNIT. AGAIN MEASURE THE GAP WITH THE CLUTCH THUS ENGAGED.

NOTE

ON MULTIPLE STOP CLUTCHES CHECK THE CLEARANCE AT THE STOP LUG THAT IS ADJACENT TO THE FORM IN THE CLUTCH ADJUSTING DISK

TO ADJUST

LOOSEN THE TWO CLAMP SCREWS ON THE CLUTCH DISK. ENGAGE A WRENCH OR SCREWDRIVER ON THE LUG OF THE ADJUSTING DISK AND ROTATE THE DISK.

NOTE

AFTER THE ABOVE ADJUSTMENT IS MADE, DISENGAGE THE CLUTCH, REMOVE THE DRUM MOUNTING SCREW AND ROTATE THE DRUM IN ITS NORMAL DIRECTION OF ROTATION TO MAKE CERTAIN THAT IT DOES NOT DRAG ON THE SHOE, IF THE DRUM DRAGS, REFINE THE ABOVE ADJUSTMENT.

FIGURE 1-34 TYPING UNIT, CLUTCH SHOE MECHANISM (ALL CLUTCHES)

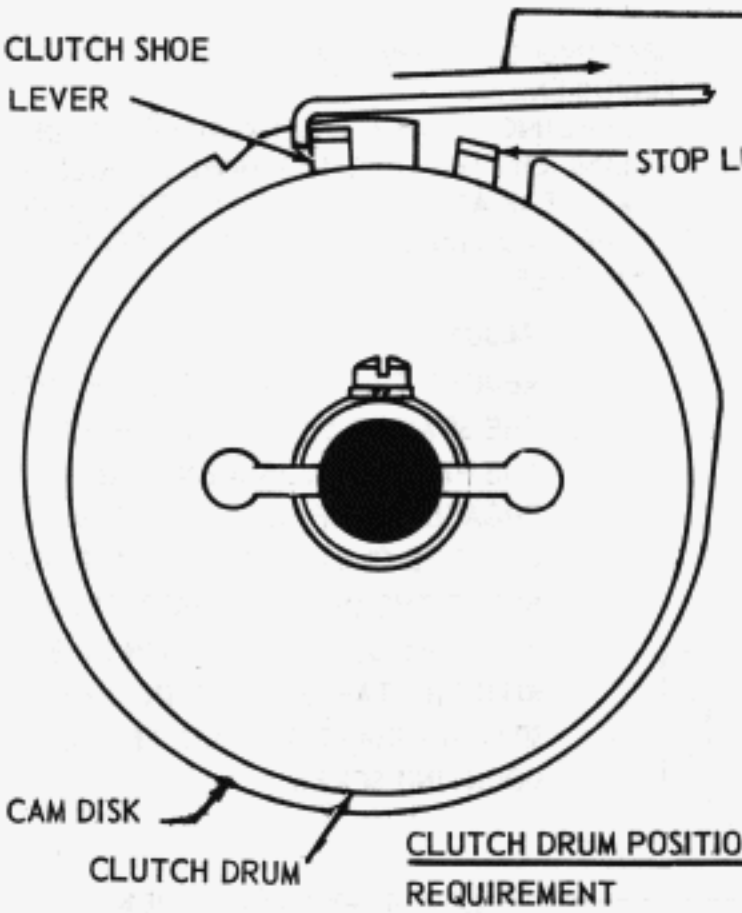

CLUTCH SHOE LEVER SPRING TENSIONS

REQUIREMENT

CLUTCH ENGAGED. HOLD CAM DISK TO PREVENT TURNING. SPRING SCALE PULLED AT TANGENT TO CLUTCH.

MIN. 15 OZS. ONE-STOP CLUTCHES
MAX. 20 OZS.

MIN. 16 OZS. MULTIPLE-STOP CLUTCHES
MAX. 22 OZS.

TO MOVE THE SHOE LEVER IN CONTACT WITH THE STOP LUG.

CLUTCH DRUM POSITION (EXCEPT SELECTOR)

REQUIREMENT

CLUTCH SHOE LEVER HELD DISENGAGED. CLUTCH SHOULD HAVE SOME END PLAY
MAX. 0.015 INCH

TO ADJUST

POSITION EACH DRUM AND SPACING CLUTCH SET COLLAR WITH MOUNTING SCREWS LOOSENED.

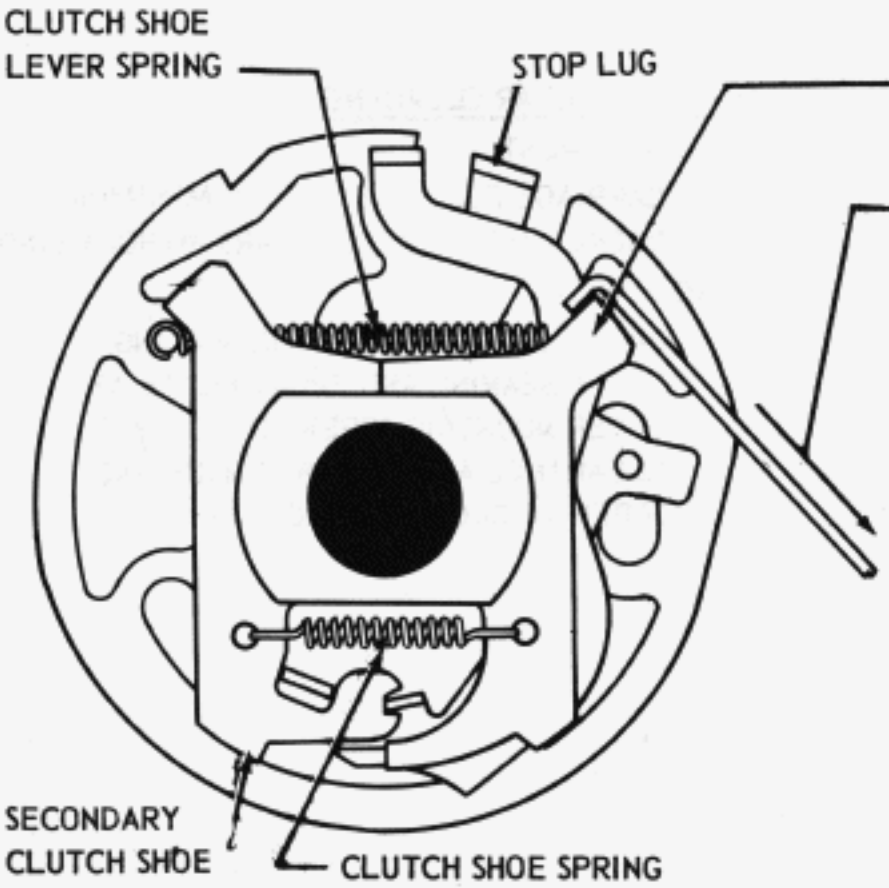

CLUTCH SHOE SPRING TENSION

NOTE

IN ORDER TO CHECK THIS SPRING TENSION, IT IS NECESSARY TO REMOVE THE CLUTCH FROM THE MAIN SHAFT. THEREFORE, IT SHOULD NOT BE CHECKED UNLESS THERE IS GOOD REASON TO BELIEVE THAT IT DOES NOT MEET ITS REQUIREMENT.

REQUIREMENT

CLUTCH DRUM REMOVED. SPRING SCALE APPLIED TO PRIMARY SHOE AT A TANGENT TO THE FRICTION SURFACE.

MIN. 3 OZS.
MAX. 5 OZS.

TO START THE PRIMARY SHOE MOVING AWAY FROM SECONDARY SHOE AT POINT OF CONTACT.

FIGURE 1-35. TYPING UNIT, CLUTCH MECHANISM, LEFT SIDE VIEW

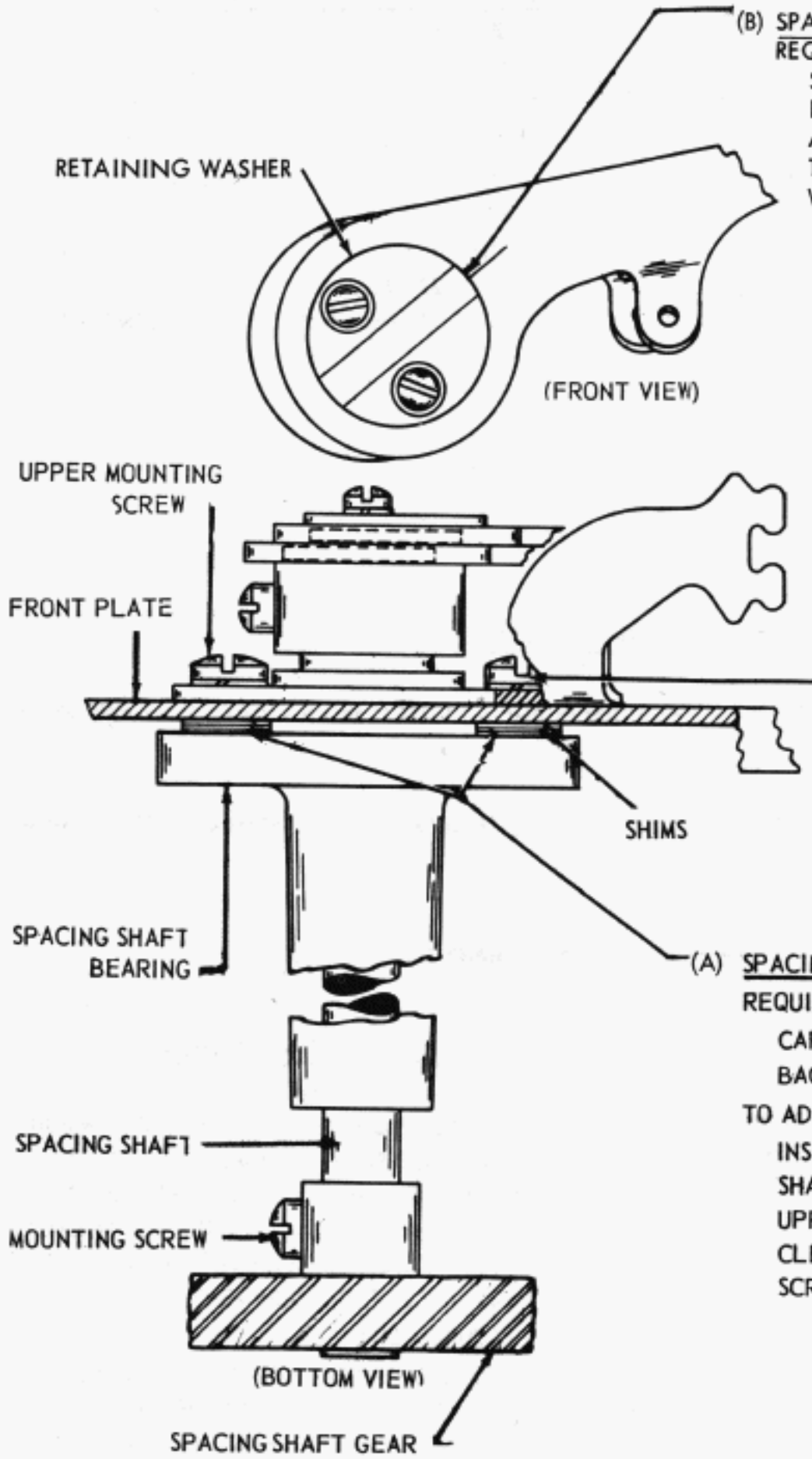

(B) SPACING GEAR PHASING REQUIREMENT

SPACING CLUTCH DISENGAGED. INDEX LINE ON THE SPACING PAWL SHOULD BE AS NEAR AS POSSIBLE TO THE CENTER OF THE TWO LINES ON THE PAWL RETAINING WASHER.

TO ADJUST

REMOVE THE MOUNTING SCREW FROM THE SPACING SHAFT GEAR. HOLD THE PAWLS IN ALIGNMENT AND ENGAGE THE SPACING SHAFT GEAR WITH THE CLUTCH GEAR AT A POINT WHERE THE SPACING SHAFT GEAR MOUNTING SCREW HOLE IS IN LINE WITH THE TAPPED HOLE IN THE SPACING SHAFT AND INSERT THE MOUNTING SCREW

(A) SPACING GEAR CLEARANCE

REQUIREMENT

CARRIAGE FULLY RETURNED. MINIMUM BACKLASH OF SPACING GEARS WITHOUT BIND.

TO ADJUST

INSERT SHIMS BETWEEN THE SPACING SHAFT BEARING AND FRONT PLATE AT UPPER MOUNTING SCREW TO INCREASE CLEARANCE AND AT LOWER MOUNTING SCREW TO DECREASE BACKLASH.

FIGURE 1-36 TYPING UNIT, SPACING MECHANISM

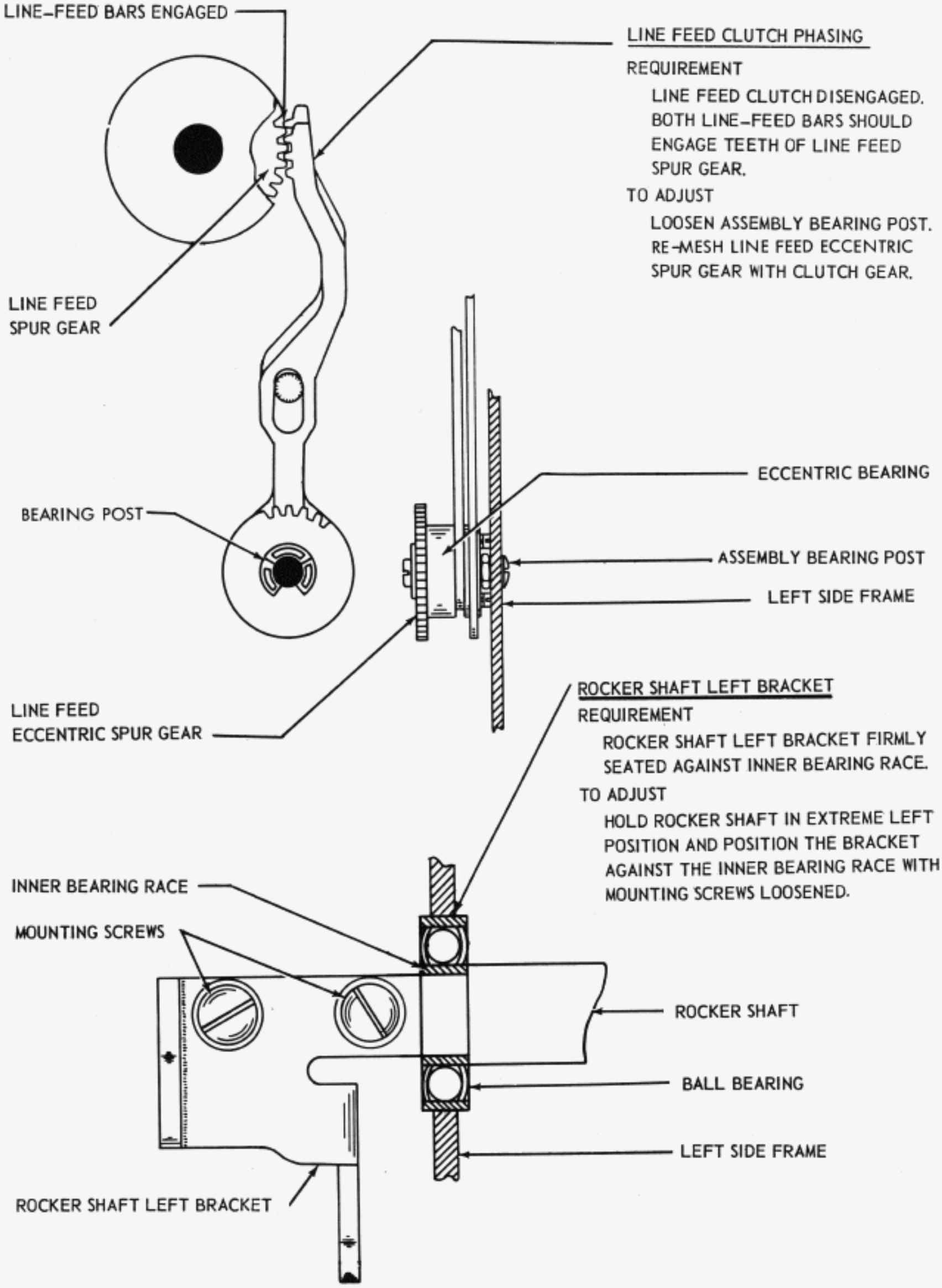

FIGURE 1-37. TYPING UNIT, LINE FEED AND ROCKER SHAFT MECHANISMS

ROCKER SHAFT BRACKET ECCENTRIC STUD

(1) REQUIREMENT --- WITH TYPE BOX CLUTCH DISENGAGED AND PLAY IN LOCKING ARM TAKEN UP TOWARD FRONT, GAP BETWEEN LOWER SIDE OF LOCK LEVER ROLLER AND TOP EDGE OF SHOULDER ON HORIZONTAL POSITIONING LOCK LEVER SHOULD BE:
MIN. 0.055 INCH ---------- MAX. 0.090 INCH

(2) REQUIREMENT --- MAKE SURE THAT ROCKER SHAFT DRIVE LINK IS FREE IN ITS BEARINGS (NOT UNDER LOAD) WHEN CLUTCH IS IN (a) ITS STOP POSITION; (b) WHEN IT IS ROTATED 180 DEGREES FROM STOP POSITION.

TO ADJUST --- (1) POSITION ECCENTRIC STUD IN LOWER END OF ROCKER-SHAFT LEFT BRACKET. KEEP HIGH PART OF ECCENTRIC (MARKED WITH DOT) BELOW CENTER LINE OF DRIVE LINK. (2) MAKE SURE THAT STUD IS FREE IN TYPE BOX CLUTCH BEARING AT POSITIONS (a) AND (b) ABOVE (NO PUSHING OR PULLING FORCE ON DRIVE LINK). CHECK MANUALLY BY MOVING LINK TOWARD LEFT SIDE FRAME AND THEN IN REVERSE DIRECTION.

NOTE --- ANY CHANGE IN THIS ADJUSTMENT WILL REQUIRE THAT THE FOLLOWING RELATED ADJUSTMENTS BE RECHECKED: HORIZONTAL POSITIONING DRIVE LINKAGE (FIGURE 1-46) RIGHT VERTICAL POSITIONING LEVER ECCENTRIC STUD (FIGURE 1-39), LEFT VERTICAL POSITIONING LEVER ECCENTRIC STUD (FIGURE 1-40) VERTICAL POSITIONING LOCK LEVER (FIGURE 1-47), RIBBON FEED LEVER BRACKET (FIGURE 1-63), FUNCTION STRIPPER BLADE ARMS (FIGURE 4-37), SPACING TRIP LEVER BAIL CAM PLATE (FIGURE 1-42). REVERSING SLIDE BRACKETS (FIGURE 1-45) AND RIBBON REVERSE SPUR GEAR (FIGURE 1-62) PRINTING TRACK (FIGURE 1-59) AND PRINTING ARM (FIGURE 1-60).

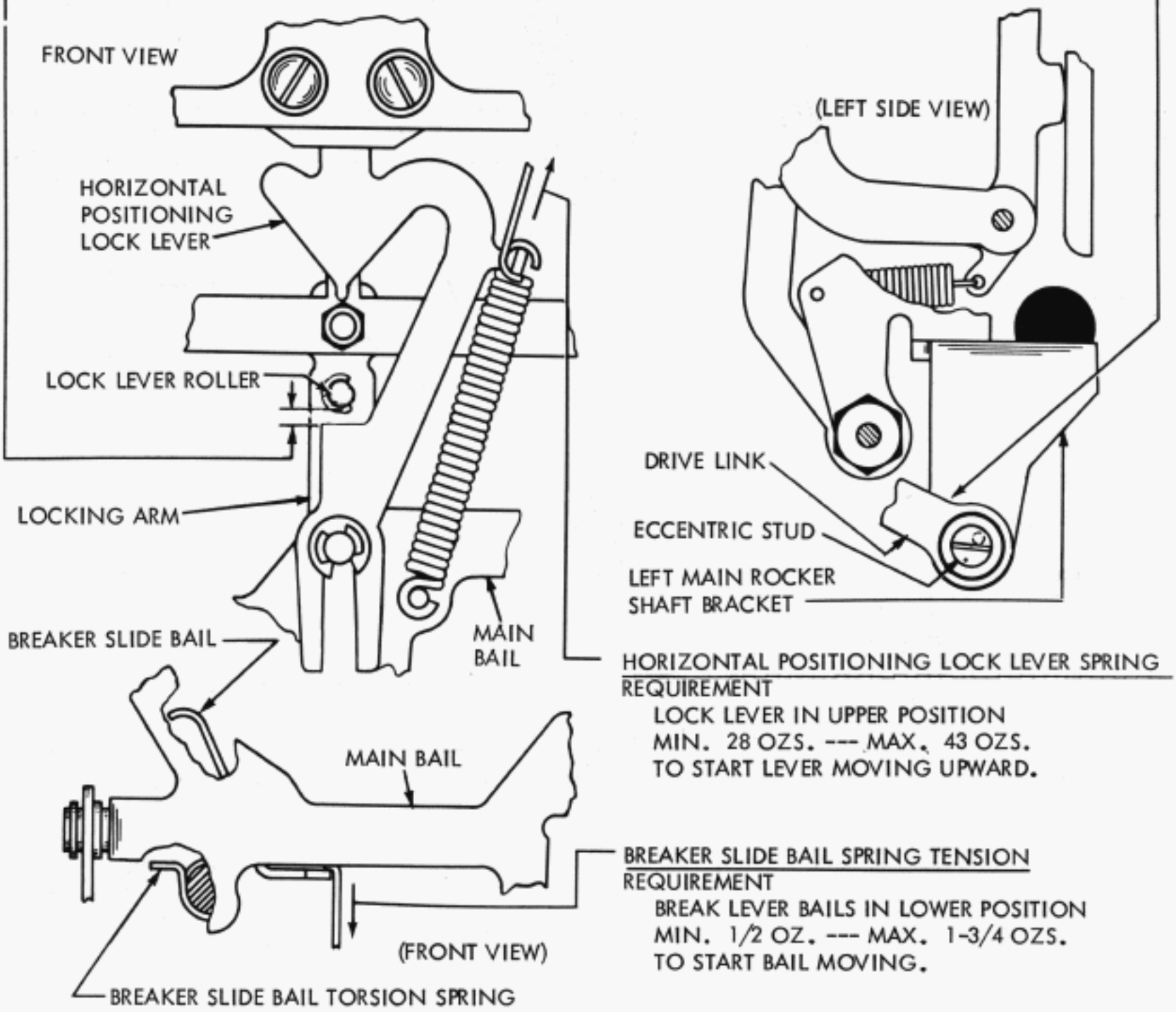

FIGURE 1-38. TYPING UNIT, SHIFT AND POSITIONING MECHANISMS

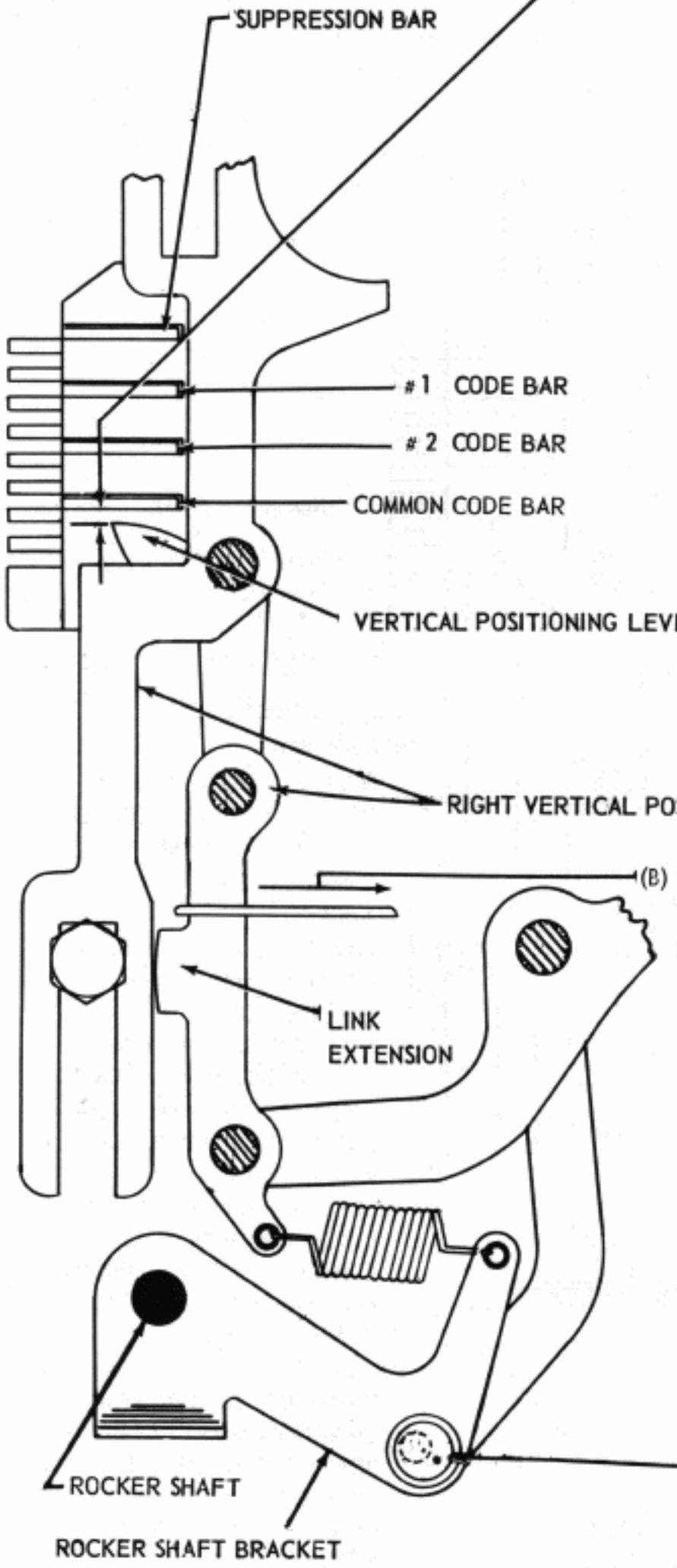

(A) RIGHT VERTICAL POSITIONING LEVER ECCENTRIC STUD

REQUIREMENT

TYPE BOX CLUTCH DISENGAGED, COMMON CODE BAR IN SPACING POSITION. PLAY TAKEN UP BY PRESSING DOWNWARD ON COMMON CODE BAR AT GUIDE BLOCK.

MIN. 0.030 INCH
MAX. 0.050 INCH

CLEARANCE BETWEEN THE TOE OF VERTICAL POSITIONING LEVER AND THE BOTTOM OF THE COMMON CODE BAR WHEN PLAY IS TAKEN UP TO MAKE CLEARANCE A MINIMUM

TO ADJUST

POSITION THE ECCENTRIC STUD IN THE RIGHT ROCKER SHAFT BRACKET. POSITION HIGH PART OF ECCENTRIC (MARKED WITH DOT) TOWARD THE REAR.

(B) VERTICAL POSITIONING LEVER SPRING TENSION

REQUIREMENT

VERTICAL POSITIONING LEVER TOES (RIGHT AND LEFT) IN CONTACT WITH THE SUPPRESSION CODE BAR, LEVERS NOT BUCKLED.

MIN. 4 OZS.
MAX. 12 OZS.

TO MOVE THE LINK EXTENSION AWAY FROM THE VERTICAL POSITIONING LEVER.

CHECK BOTH RIGHT AND LEFT SPRINGS.

FIGURE 1-39 TYPING UNIT, VERTICAL POSITIONING MECHANISM, RIGHT SIDE

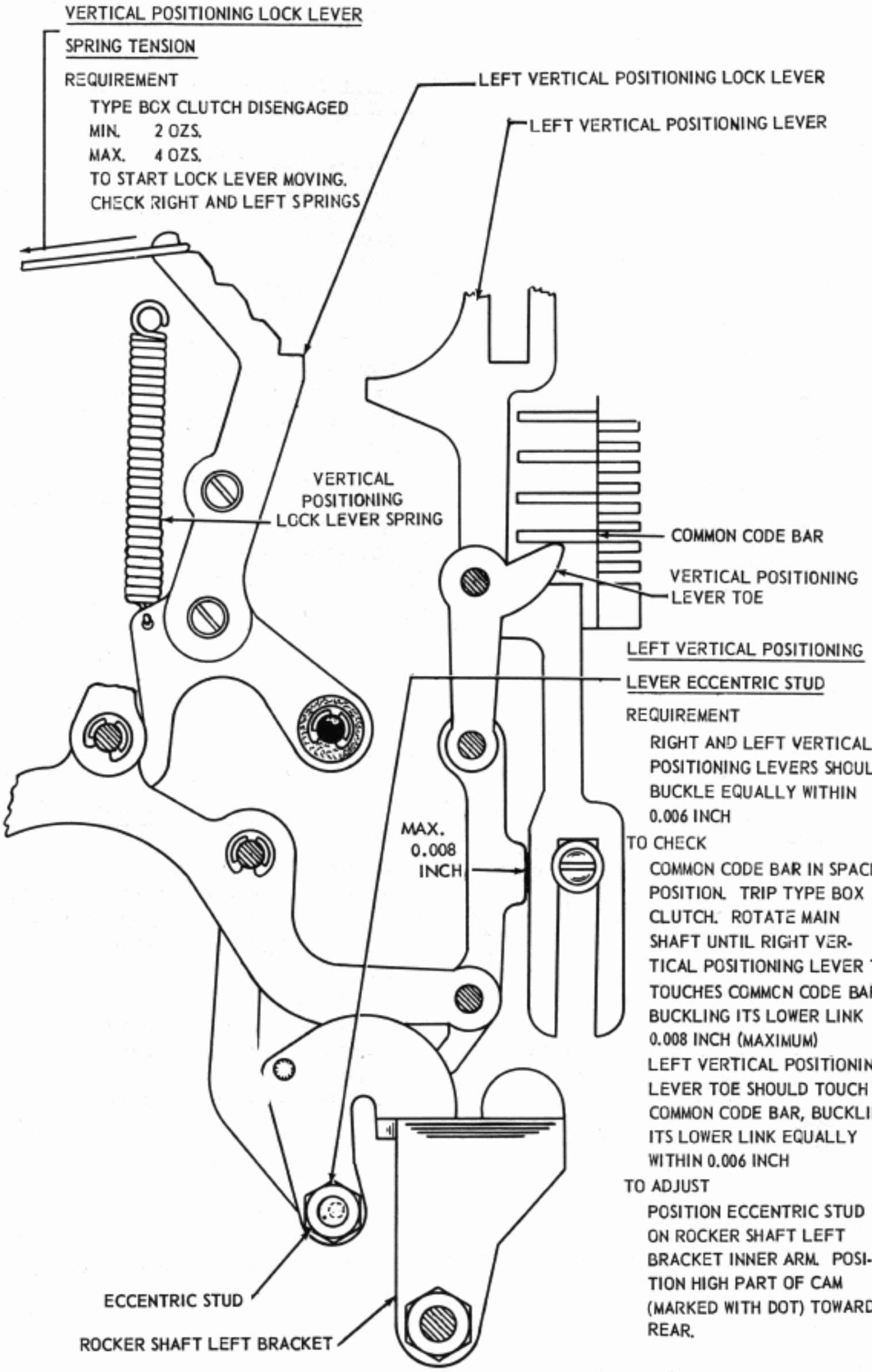

FIGURE 1-40 TYPING UNIT, VERTICAL POSITIONING MECHANISM LEFT SIDE

NOTE: CHECK RELATED ADJUSTMENTS, FIGURES 1-53, 1-54 AND 1-57, IF THE FOLLOWING ADJUSTMENTS ARE REMADE.

OSCILLATING RAIL SLIDE POSITION

REQUIREMENT

CARRIAGE RETURN RING AND AUTOMATIC CARRIAGE RETURN-LINE FEED RING FREE TO ROTATE ON SPACING DRUM (FIVE MOUNTING SCREWS LOOSENED.) SPACING CLUTCH DISENGAGED. FEED PAWL, WHICH IS FARTHEST ADVANCED, ENGAGING TOOTH IMMEDIATELY ABOVE CUT-AWAY SECTION OF RATCHET.

CLEARANCE BETWEEN SLIDE AND PULLEY

MIN. 0.025 INCH——MAX. 0.050 INCH

TO ADJUST

POSITION SLIDE ON WIRE ROPE WITH CLAMP SCREWS LOOSENED.

NOTE: FOR EARLIER DESIGN SEE FIGURE 4-27

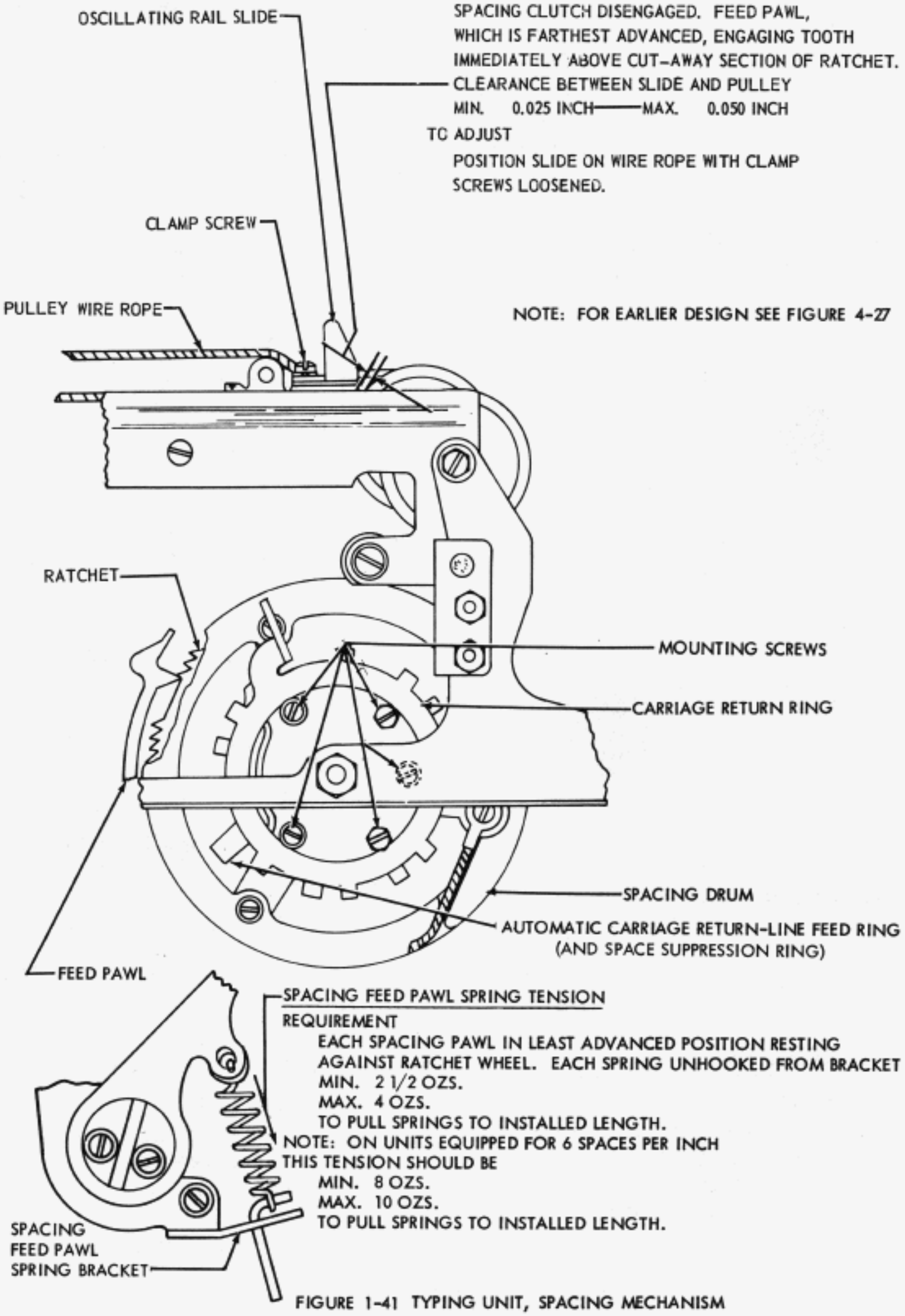

FIGURE 1-41 TYPING UNIT, SPACING MECHANISM

(A) SPACING TRIP LEVER BAIL CAM PLATE

REQUIREMENT

SPACING TRIP LEVER ARM IN UPWARD POSITION. TYPE BOX CLUTCH ROTATED THROUGH APPROXIMATELY ONE-HALF OF ITS CYCLE. ALL FUNCTION PAWLS DISENGAGED FROM FUNCTION BAR. CLEARANCE BETWEEN TOP SURFACE OF TRIP LEVER ARM EXTENSION AND SPACING TRIP LEVER SHOULDER.

MIN. 0.010 INCH

MAX. 0.040 INCH

TO ADJUST

POSITION CAM PLATE ON ROCKER SHAFT WITH MOUNTING SCREWS LOOSENED. POSITION FORWARD EDGE OF CAM PLATE PARALLEL TO SHAFT.

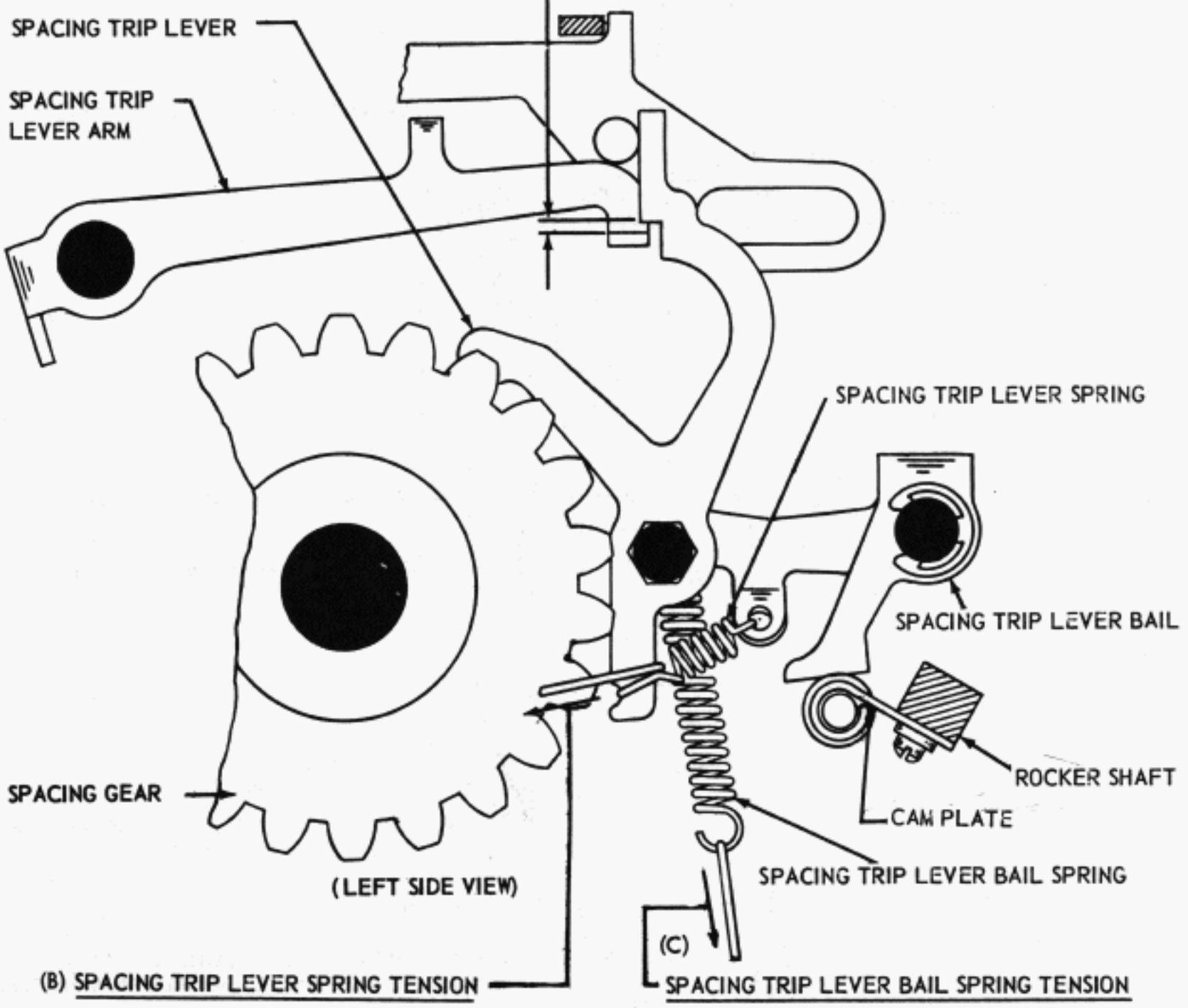

(B) SPACING TRIP LEVER SPRING TENSION

REQUIREMENT

TYPE BOX CLUTCH DISENGAGED.

MIN. 2 1/2 OZS.

MAX. 5 OZS.

TO START LEVER MOVING.

(C) SPACING TRIP LEVER BAIL SPRING TENSION

REQUIREMENT

SPACING TRIP LEVER BAIL AGAINST STOP.

SPACING TRIP LEVER BAIL SPRING UNHOOKED.

MIN. 8 OZS.

MAX. 12 OZS.

TO PULL SPRING TO INSTALLED LENGTH.

FIGURE 1-42 TYPING UNIT, SPACING MECHANISM

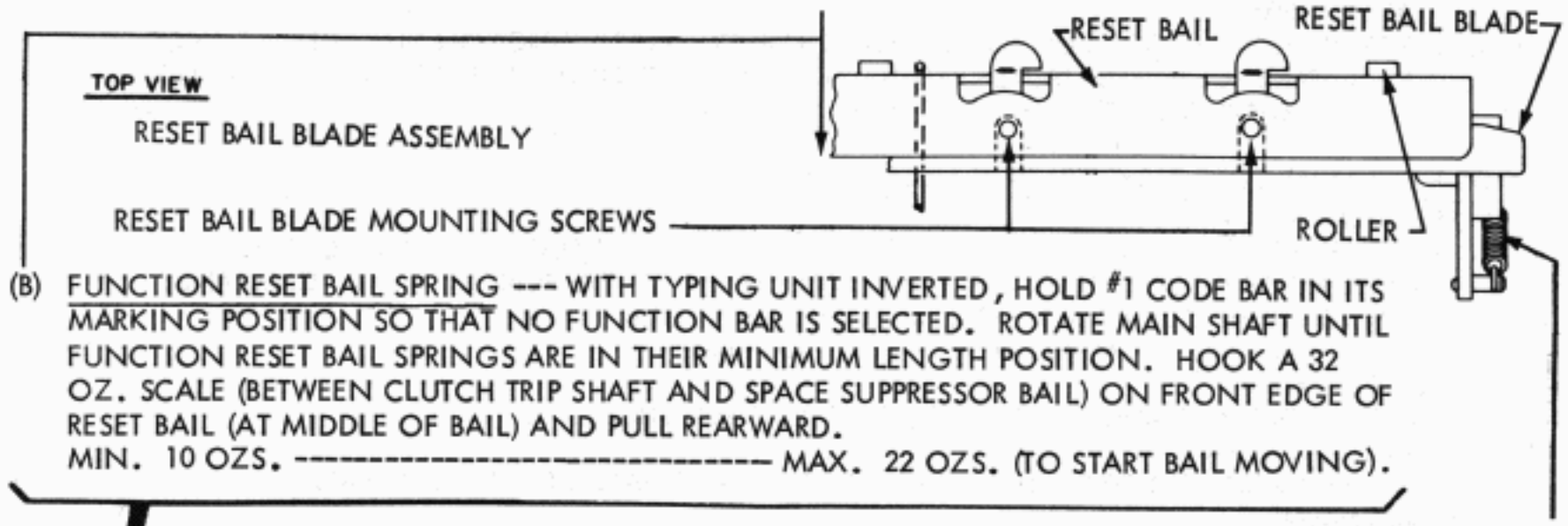

(B) FUNCTION RESET BAIL SPRING --- WITH TYPING UNIT INVERTED, HOLD #1 CODE BAR IN ITS MARKING POSITION SO THAT NO FUNCTION BAR IS SELECTED. ROTATE MAIN SHAFT UNTIL FUNCTION RESET BAIL SPRINGS ARE IN THEIR MINIMUM LENGTH POSITION. HOOK A 32 OZ. SCALE (BETWEEN CLUTCH TRIP SHAFT AND SPACE SUPPRESSOR BAIL) ON FRONT EDGE OF RESET BAIL (AT MIDDLE OF BAIL) AND PULL REARWARD.
MIN. 10 OZS. ---------- MAX. 22 OZS. (TO START BAIL MOVING).

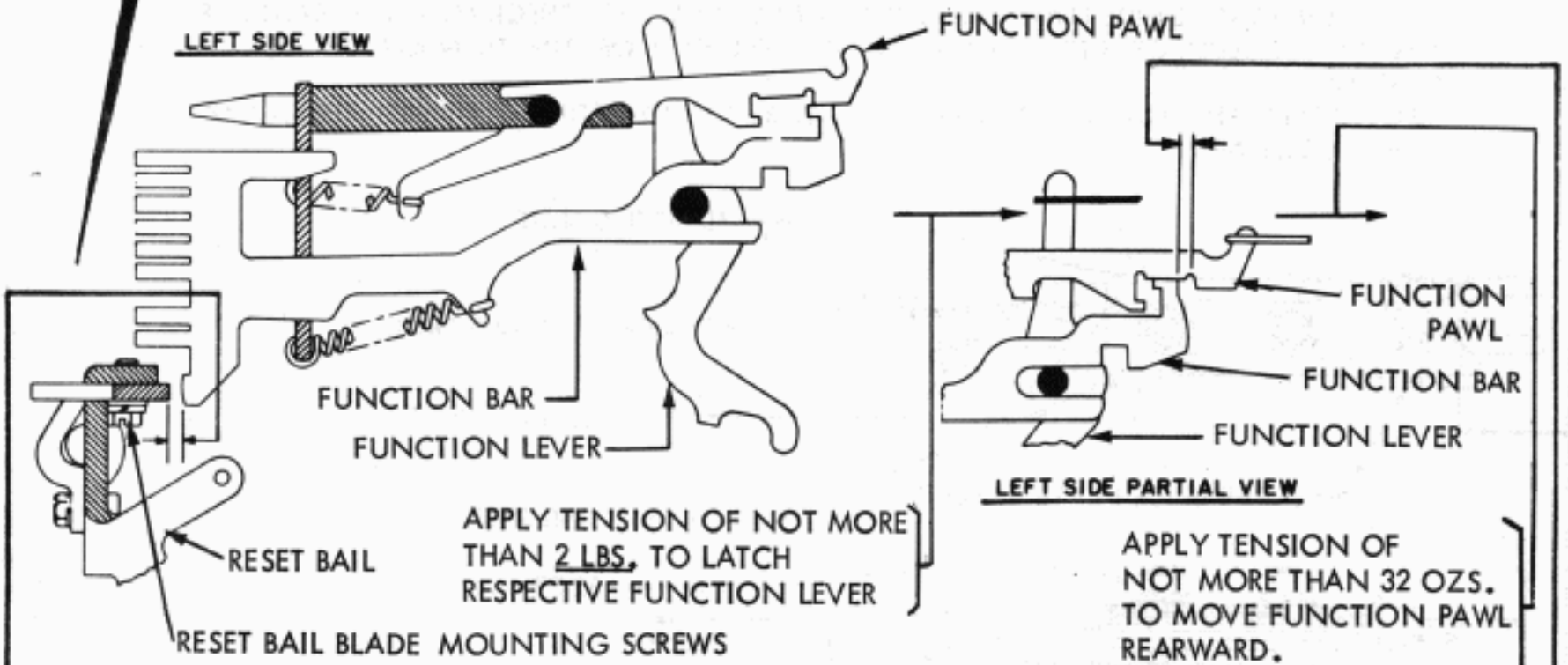

(A) FUNCTION RESET BAIL BLADE (FOR UNITS WITH 2-STOP FUNCTION CLUTCH SEE FIG. 4-29)

(1) REQUIREMENT --- WITH ALL CLUTCHES DISENGAGED, TRIP CODE BAR CLUTCH AND TURN MAIN SHAFT UNTIL CODE-BAR CLUTCH SHOE-RELEASE LEVER JUST TOUCHES ITS STOP LEVER. UNLATCH ALL FUNCTION PAWLS FROM THEIR FUNCTION BARS. HOLD RESPECTIVE FUNCTION BAR IN ITS EXTREME REARWARD POSITION WITH SPRING HOOK; CLEARANCE BETWEEN FUNCTION BAR AND RESET BAIL BLADE SHOULD BE
MIN. 0.018 INCH ---------- MAX. 0.035 INCH
TO CHECK --- MEASURE CLEARANCE AT BARS IN STUNT BOX SLOTS, NO'S 1, 4, 11, 18, 23, 33, 38 AND 41. IF A DESIGNATED SLOT IS VACANT, USE NEAREST BAR OR SELECT BAR WITH HIGHEST NUMBERED SLOT WHEN A BAR IS LOCATED ON BOTH SIDES OF VACANT SLOT. (VIEW SLOTS FROM REAR, NUMBERING FROM LEFT TO RIGHT).
TO ADJUST --- POSITION BLADE ON RESET BAIL WITH ITS MOUNTING SCREWS FRICTION TIGHT.

(2) REQUIREMENT --- EACH FUNCTION PAWL SHOULD OVER TRAVEL ITS FUNCTION BAR BY AT LEAST 0.002 INCH WITH INDICATED TENSIONS APPLIED. CHECK PAWLS ONE AT-A-TIME AT SLOT NO'S. USED ABOVE.
TO CHECK --- IF CARRIAGE RETURN LEVER ADJUSTMENT HAS NOT BEEN MADE, LOOSEN ITS CLAMP SCREW. LATCH FUNCTION PAWLS BY LOWERING STRIPPER BLADE; TRIP CODE BAR CLUTCH AND POSITION ITS RELEASE LEVER AS IN (1) ABOVE. STRIP OFF ANY FUNCTIONS WHICH MAY HAVE BEEN SELECTED.
TO ADJUST --- REFINE REQUIREMENT (1) ABOVE, HOLDING THE READJUSTMENT WITHIN LIMITS
MIN. 0.018 INCH ---------- MAX. 0.035 INCH

FIGURE 1-43 TYPING UNIT, RESET BAIL MECHANISM

NOTE 1. FOR UNITS WITH ADJUSTABLE GUIDE PLATES AND ONE-STOP FUNCTION CLUTCHES, PROCEED AS SPECIFIED.

NOTE 2. FOR UNITS WITH ADJUSTABLE GUIDE PLATES AND TWO-STOP FUNCTION CLUTCHES, CHANGE FIRST SENTENCE IN REQUIREMENT (1) TO "DISENGAGE FUNCTION CLUTCH AT STOP GIVING LEAST CLEARANCE." THEN PROCEED AS SPECIFIED.

FIGS - LTRS SHIFT CODE BAR OPERATING MECHANISM

(1) REQUIREMENT

WITH FUNCTION CLUTCH ROTATED UNTIL CLUTCH DISK STOP LUG IS TOWARD BOTTOM OF UNIT, HOOK FIGURES FUNCTION PAWL OVER THE END OF THE FUNCTION BAR. CLEARANCE BETWEEN UPPER GUIDE PLATE EXTENSION AND SHIFT SLIDE.
MAX. 0.020 WHEN PLAY IS TAKEN UP FOR MAXIMUM.

(2) REQUIREMENT

WITH 32 OZ. PULL APPLIED TO FUNCTION PAWL THERE SHOULD BE
MIN. 0.002 INCH
BETWEEN SHOULDER OF FIGURES FUNCTION PAWL AND FACE OF FUNCTION BAR.

(3) REQUIREMENT

REPEAT REQUIREMENT (1) & (2) FOR THE LETTERS FUNCTION PAWL. CHECK MAX. CLEARANCE BETWEEN LOWER GUIDE PLATE EXTENSION AND SHIFT SLIDE. CHECK MIN. CLEARANCE BETWEEN SHOULDER OF LETTER FUNCTION PAWL AND FACE OF FUNCTION BAR.

TO ADJUST

POSITION UPPER AND/OR LOWER GUIDE PLATE BY THE ADJUSTING SLOT WITH THE CLAMP NUTS LOOSENED.

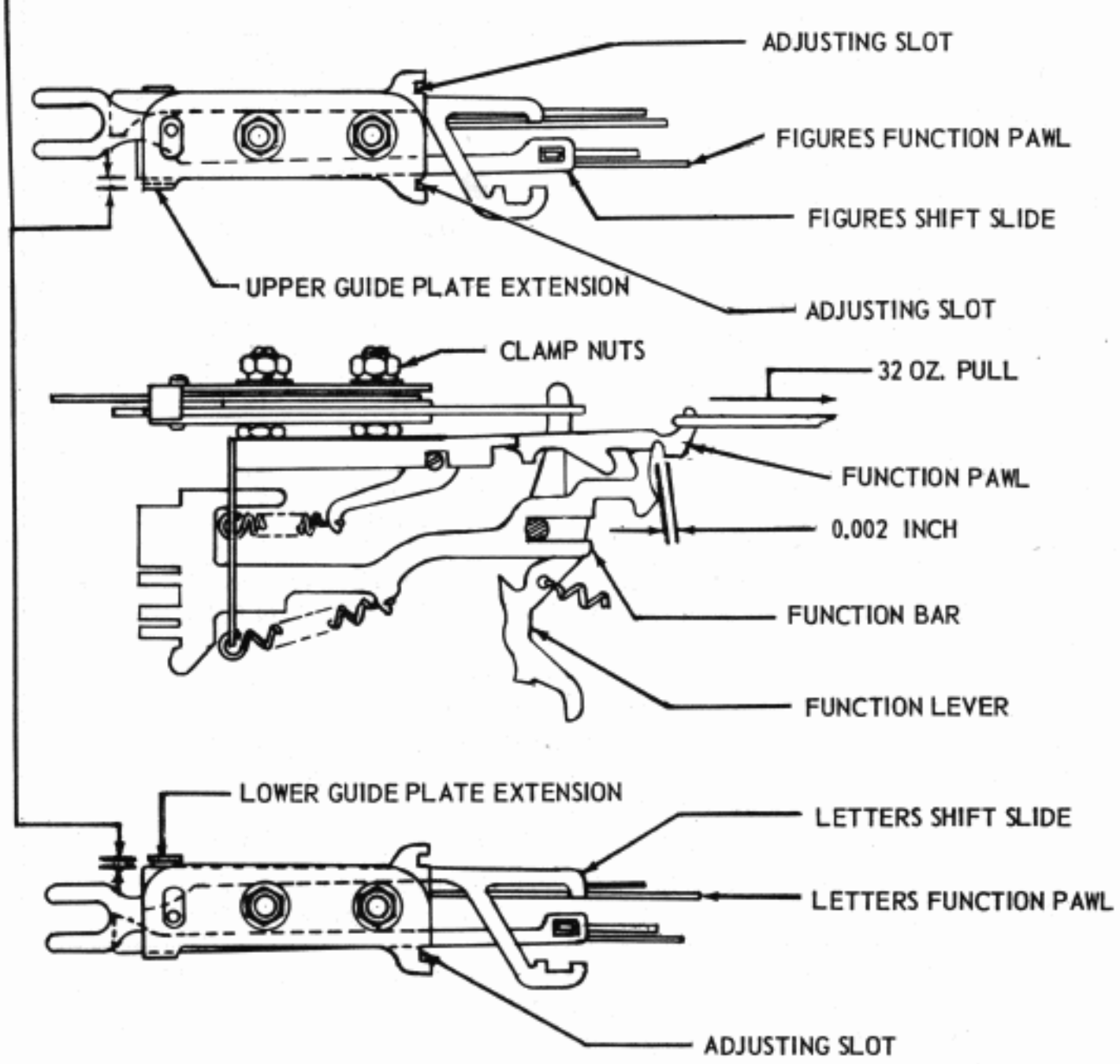

NOTE: FOR EARLIER DESIGN SEE FIGURE 4-28

FIGURE 1-44 TYPING UNIT, SHIFT CODE BAR OPERATING MECHANISM

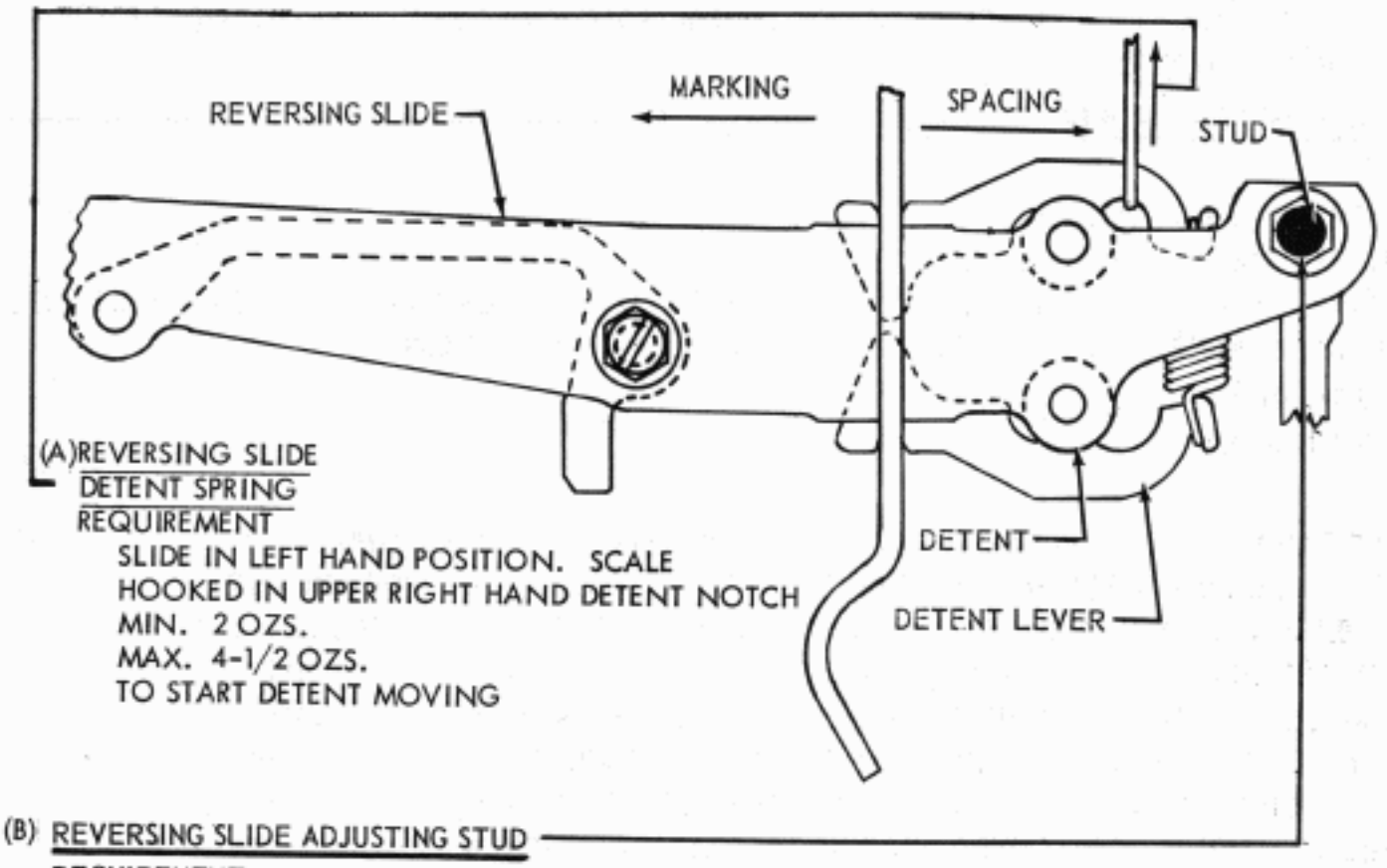

(A) REVERSING SLIDE DETENT SPRING REQUIREMENT

SLIDE IN LEFT HAND POSITION. SCALE HOOKED IN UPPER RIGHT HAND DETENT NOTCH
MIN. 2 OZS.
MAX. 4-1/2 OZS.
TO START DETENT MOVING

(B) REVERSING SLIDE ADJUSTING STUD

REQUIREMENT

TYPE BOX CLUTCH DISENGAGED.
WITH NO. 3 CODE BAR IN SPACING POSITION (RIGHT), THE REVERSING SLIDE DETENT ROLLERS SHOULD BE FULLY SEATED IN THE RIGHT-HAND NOTCHES OF THE DETENT LEVER.
WITH NO. 3 CODE BAR IN MARKING POSITION (LEFT), THE REVERSING SLIDE DETENT ROLLERS SHOULD BE FULLY SEATED IN THE LEFT-HAND NOTCHES OF THE DETENT LEVER.

TO ADJUST

POSITION THE REVERSING SLIDE STUD IN ITS ELONGATED HOLE WITH ITS MOUNTING NUT LOOSENED.

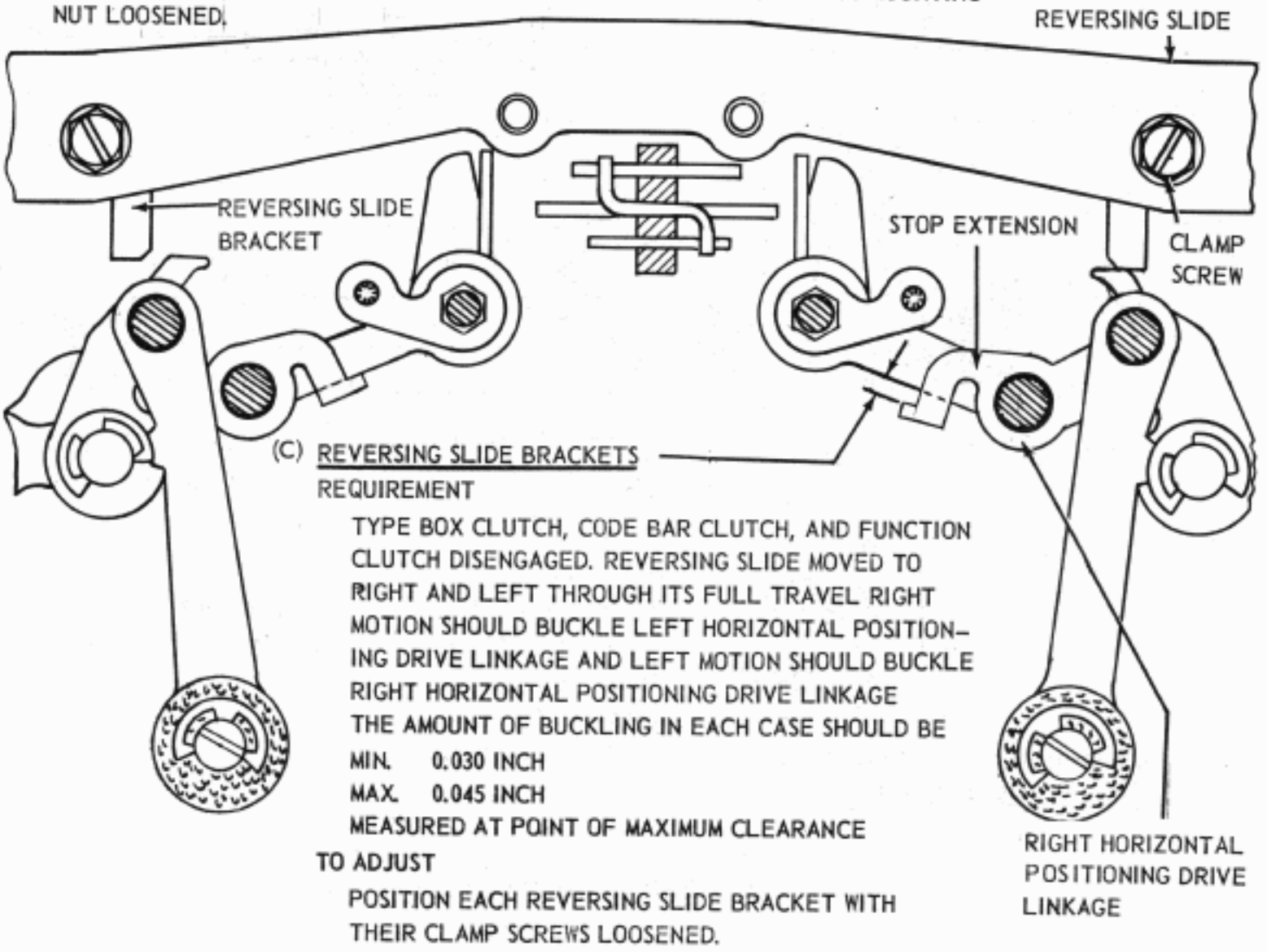

(C) REVERSING SLIDE BRACKETS

REQUIREMENT

TYPE BOX CLUTCH, CODE BAR CLUTCH, AND FUNCTION CLUTCH DISENGAGED. REVERSING SLIDE MOVED TO RIGHT AND LEFT THROUGH ITS FULL TRAVEL RIGHT MOTION SHOULD BUCKLE LEFT HORIZONTAL POSITIONING DRIVE LINKAGE AND LEFT MOTION SHOULD BUCKLE RIGHT HORIZONTAL POSITIONING DRIVE LINKAGE
THE AMOUNT OF BUCKLING IN EACH CASE SHOULD BE
MIN. 0.030 INCH
MAX. 0.045 INCH
MEASURED AT POINT OF MAXIMUM CLEARANCE

TO ADJUST

POSITION EACH REVERSING SLIDE BRACKET WITH THEIR CLAMP SCREWS LOOSENED.

FIGURE 1-45 TYPING UNIT, HORIZONTAL MOTION REVERSING MECHANISM FRONT VIEW

NOTE: THESE ADJUSTMENTS APPLY ONLY TO HORIZONTAL POSITIONING DRIVE MECHANISMS EQUIPPED WITH TORSION SPRINGS.

HORIZONTAL POSITIONING DRIVE LINKAGE

REQUIREMENT

TYPE BOX CLUTCH DISENGAGED.
CODE BARS 4 AND 5 TO SPACING (RIGHT).
CLEARANCE BETWEEN EACH SIDE OF CENTER HORIZONTAL STOP SLIDE AND DECELERATING SLIDES, ON SIDE WHERE KNEE LINK IS STRAIGHT SHOULD BE EQUAL (WITHIN 0.008 INCH)

MIN. 0.015 INCH
MAX. 0.040 INCH

TO ADJUST

LOOSEN BEARING STUD MOUNTING SCREWS AND CONNECTING STRIP MOUNTING SCREWS FRICTION TIGHT. POSITION ONE OR BOTH BEARING STUDS ON THE CONNECTING STRIP TO PROVIDE 0.025 INCH TO 0.035 INCH BETWEEN THE CENTER HORIZONTAL SLIDE AND THE DECELERATING SLIDE ON THE SIDE WHERE THE LINKAGE IS NOT BUCKLED. TIGHTEN THE TWO INNER MOUNTING SCREWS. CHANGE POSITION OF REVERSING SLIDE AND CHECK OPPOSITE CLEARANCE. EQUALIZE BY SHIFTING BOTH STUDS AND CONNECTING STRIP AS A UNIT. HOLD THE DRIVE LINKAGE HUB AGAINST THE LOWER VERTICAL LINK OF THE DRIVE LINKAGE. TIGHTEN THE TWO OUTER BEARING STUD MOUNTING SCREWS. CHECK THE LINKAGE FOR FREENESS THROUGHOUT A COMPLETE CYCLE. THE TYPE BOX CLUTCH DISK SHOULD HAVE SOME MOVEMENT IN THE NORMAL DIRECTION OF ROTATION IN THE STOP POSITION.

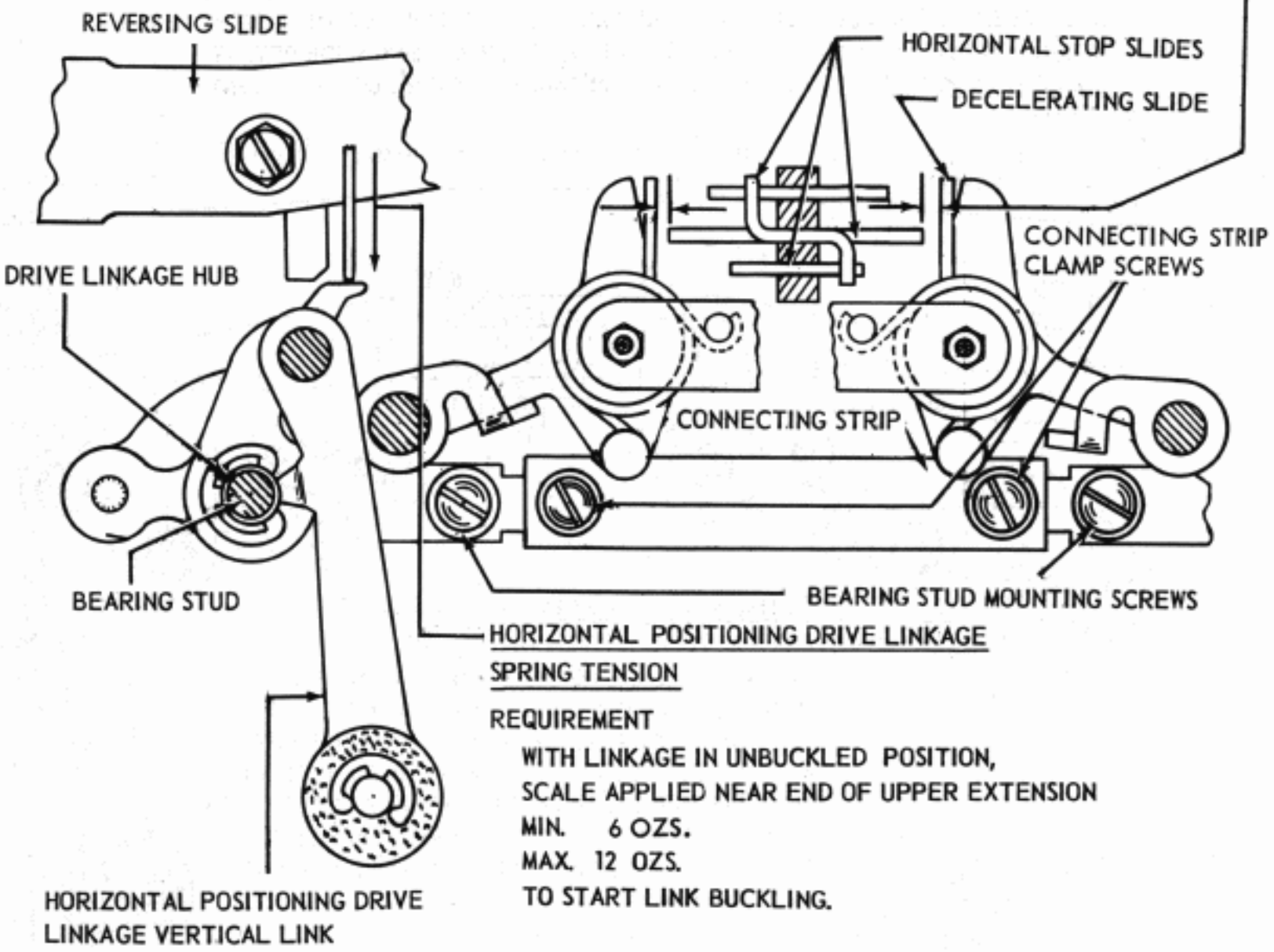

SPRING TENSION

REQUIREMENT

WITH LINKAGE IN UNBUCKLED POSITION,
SCALE APPLIED NEAR END OF UPPER EXTENSION
MIN. 6 OZS.
MAX. 12 OZS.
TO START LINK BUCKLING.

NOTE: FOR EARLIER DESIGN SEE FIGURE 4-30

FIGURE 1-46. TYPING UNIT, HORIZONTAL POSITIONING DRIVE MECHANISM, FRONT VIEW

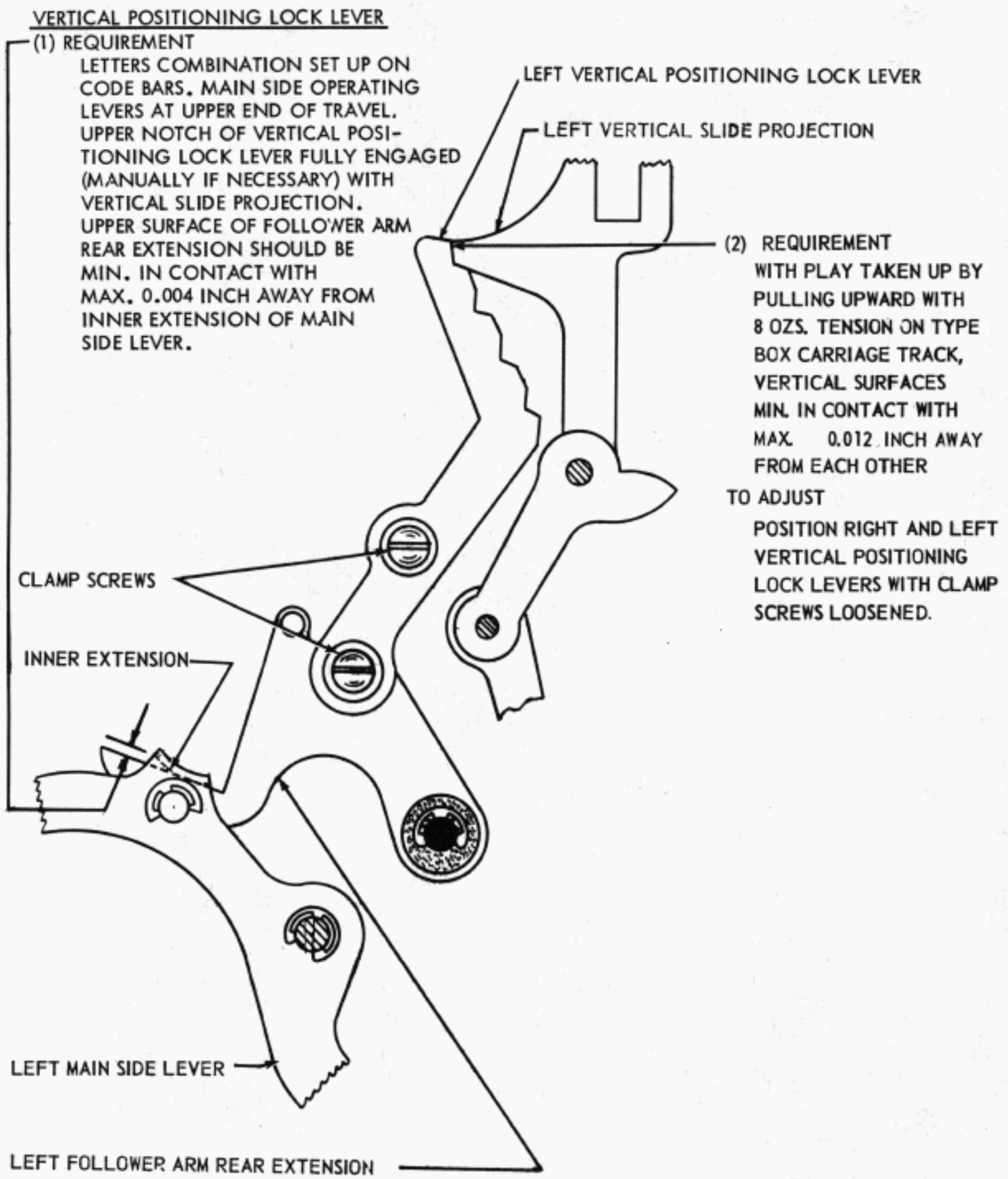

FIGURE 1-47 TYPING UNIT, VERTICAL POSITIONING MECHANISM, LEFT SIDE VIEW

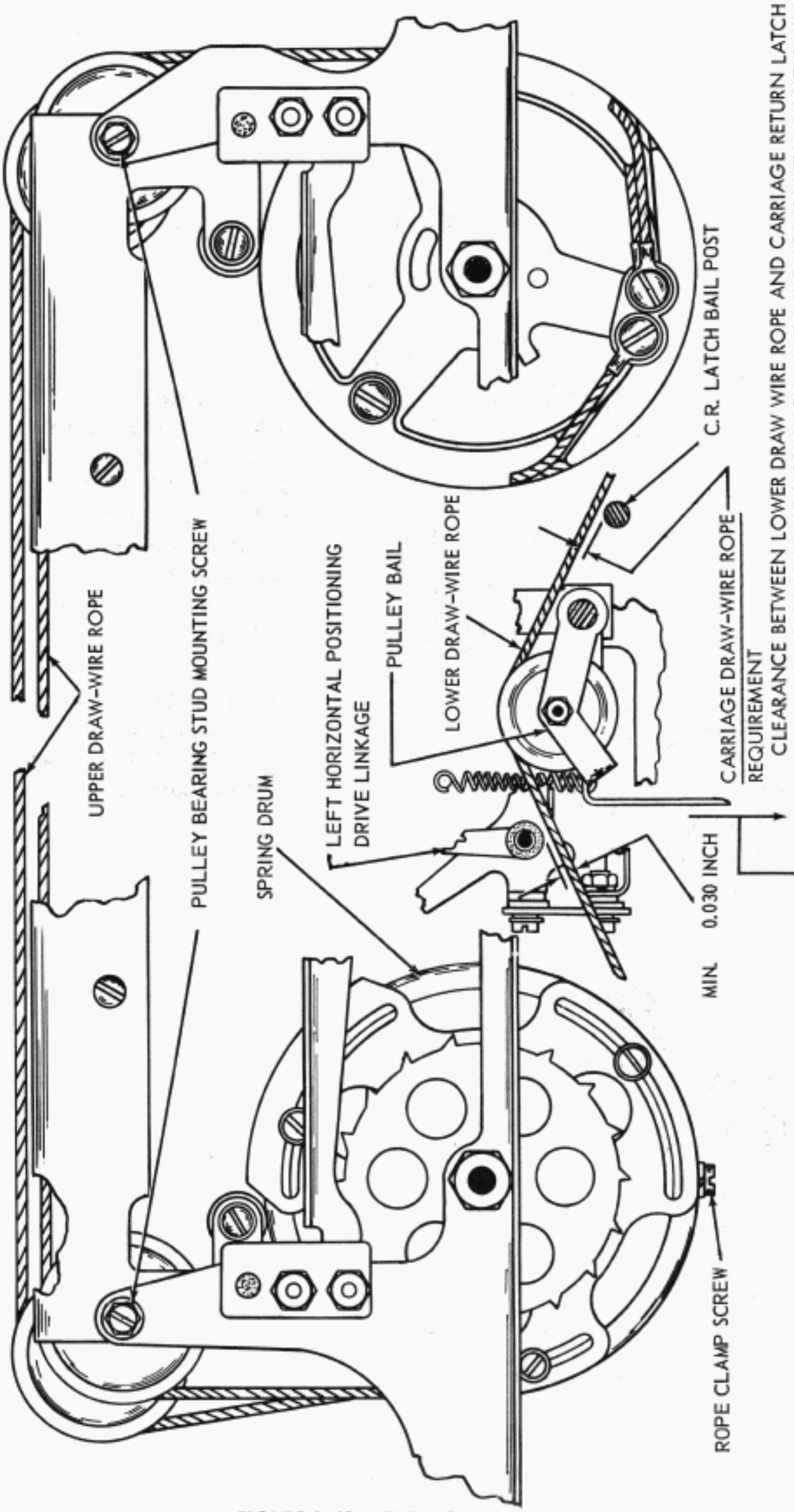

FIGURE 1-48. TYPING UNIT, SPACING MECHANISM, FRONT VIEW

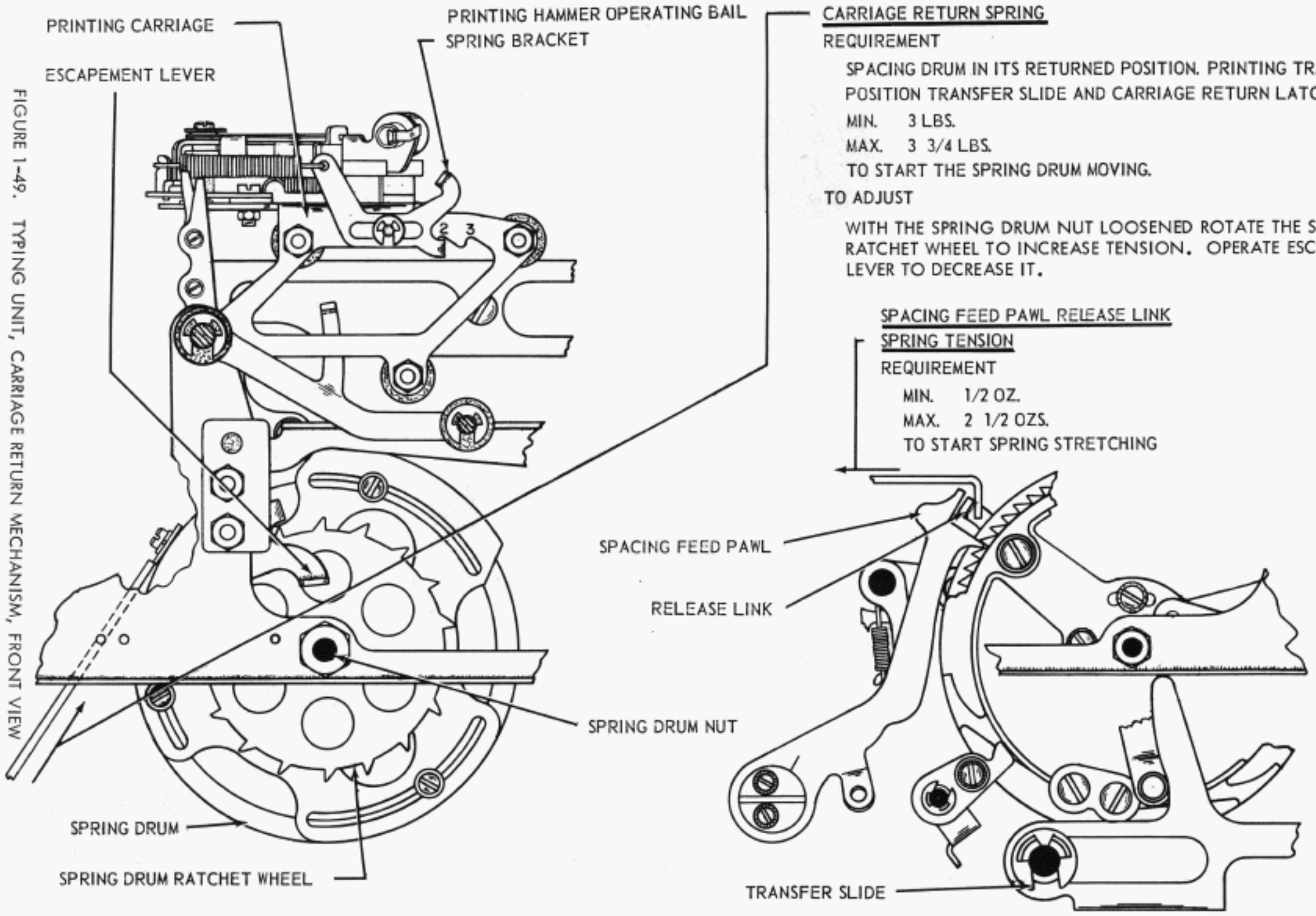

FIGURE 1-49. TYPING UNIT, CARRIAGE RETURN MECHANISM, FRONT VIEW

CARRIAGE RETURN SPRING

REQUIREMENT

SPACING DRUM IN ITS RETURNED POSITION. PRINTING TRACK IN LOWER POSITION TRANSFER SLIDE AND CARRIAGE RETURN LATCH HELD AWAY

MIN. 3 LBS.

MAX. 3 3/4 LBS.

TO START THE SPRING DRUM MOVING.

TO ADJUST

WITH THE SPRING DRUM NUT LOOSENED ROTATE THE SPRING DRUM RATCHET WHEEL TO INCREASE TENSION. OPERATE ESCAPEMENT LEVER TO DECREASE IT.

SPACING FEED PAWL RELEASE LINK SPRING TENSION

REQUIREMENT

MIN. 1/2 OZ.

MAX. 2 1/2 OZS.

TO START SPRING STRETCHING

(A)

CARRIAGE RETURN LATCH BAIL

REQUIREMENT

CARRIAGE FULLY RETURNED (SEE FIGURE 1-53)
PLAY IN CARRIAGE RETURN BAIL TAKEN UP TO RIGHT BY HOLDING RIGHT SIDE OF BAIL AGAINST ITS RETAINER. CLEARANCE BETWEEN CARRIAGE RETURN LATCH BAIL AND CARRIAGE RETURN LEVER.

MIN. 0.004 INCH
MAX. 0.040 INCH

TO ADJUST

POSITION LATCH BAIL PLATE WITH CLAMP SCREW LOOSENED

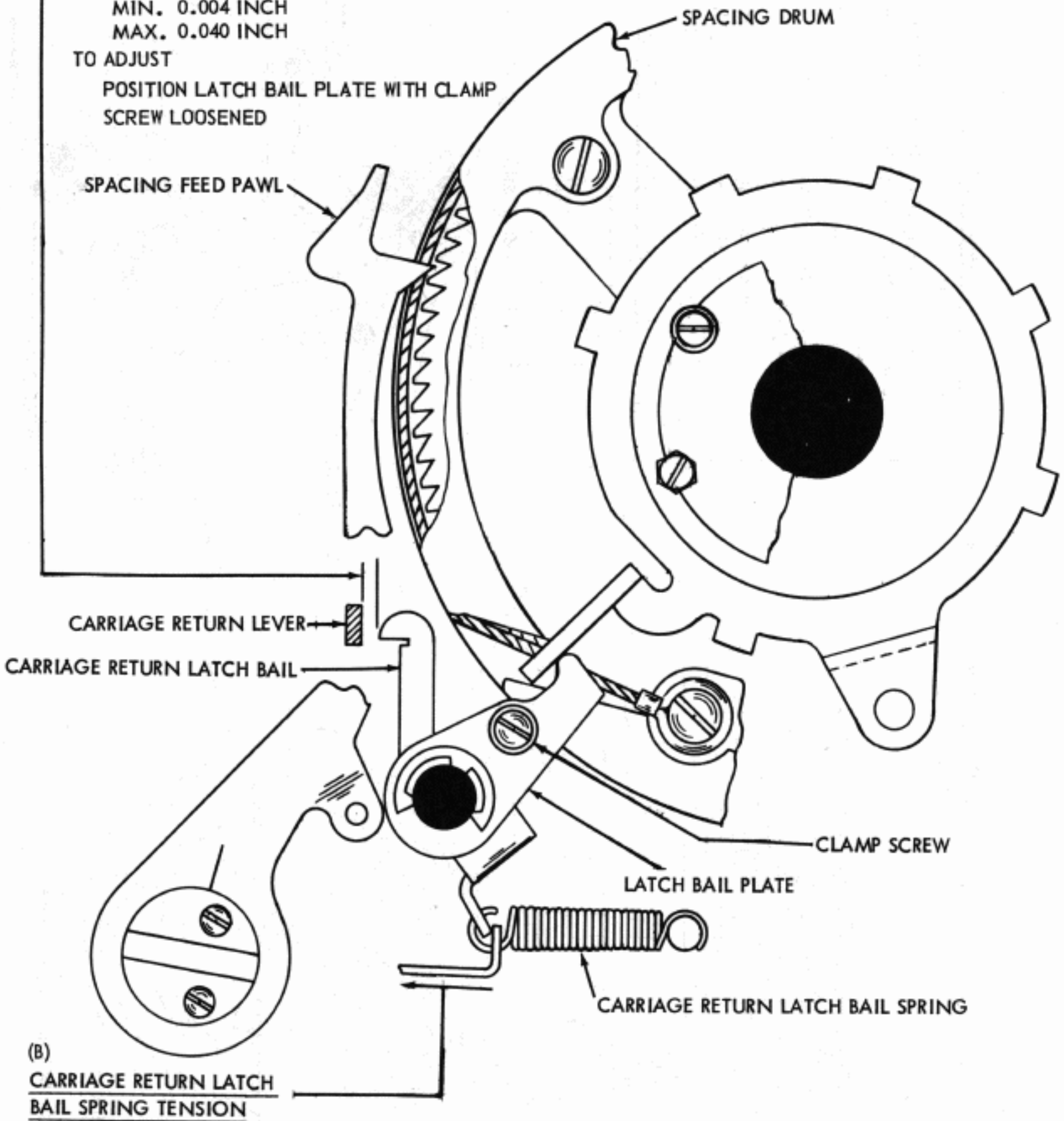

(B)

CARRIAGE RETURN LATCH BAIL SPRING TENSION

REQUIREMENT

SPACING DRUM FULLY RETURNED
MIN. 3 OZS.
MAX. 4 1/2 OZS.
TO START LATCH BAIL MOVING

FIGURE 1-50. TYPING UNIT, CARRIAGE RETURN MECHANISM, FRONT VIEW

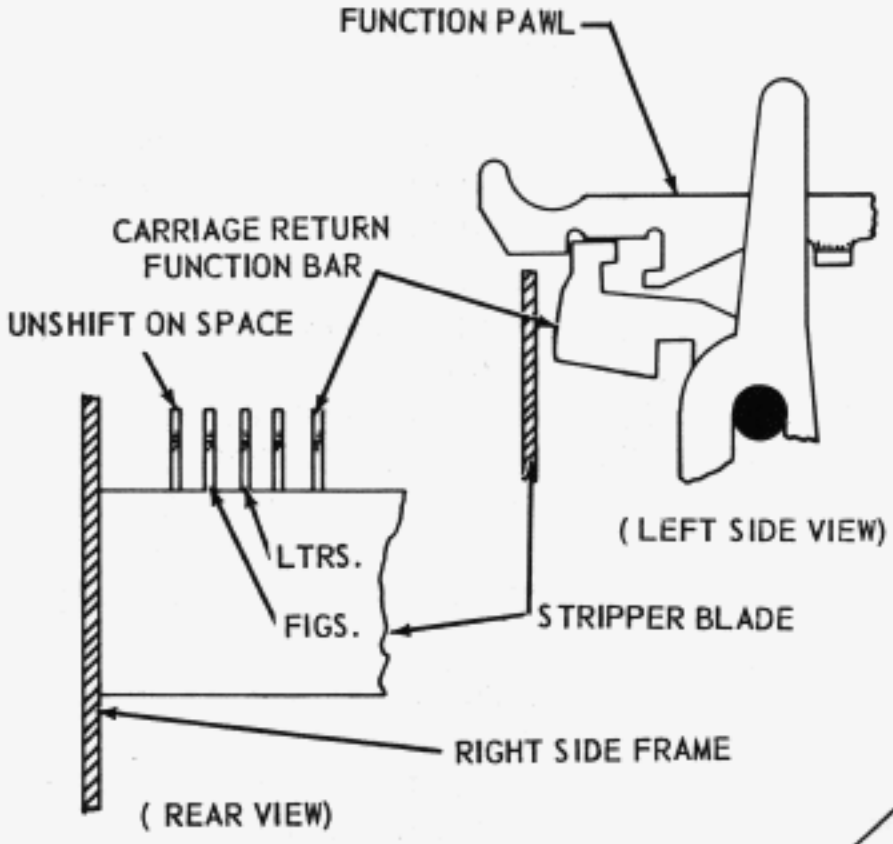

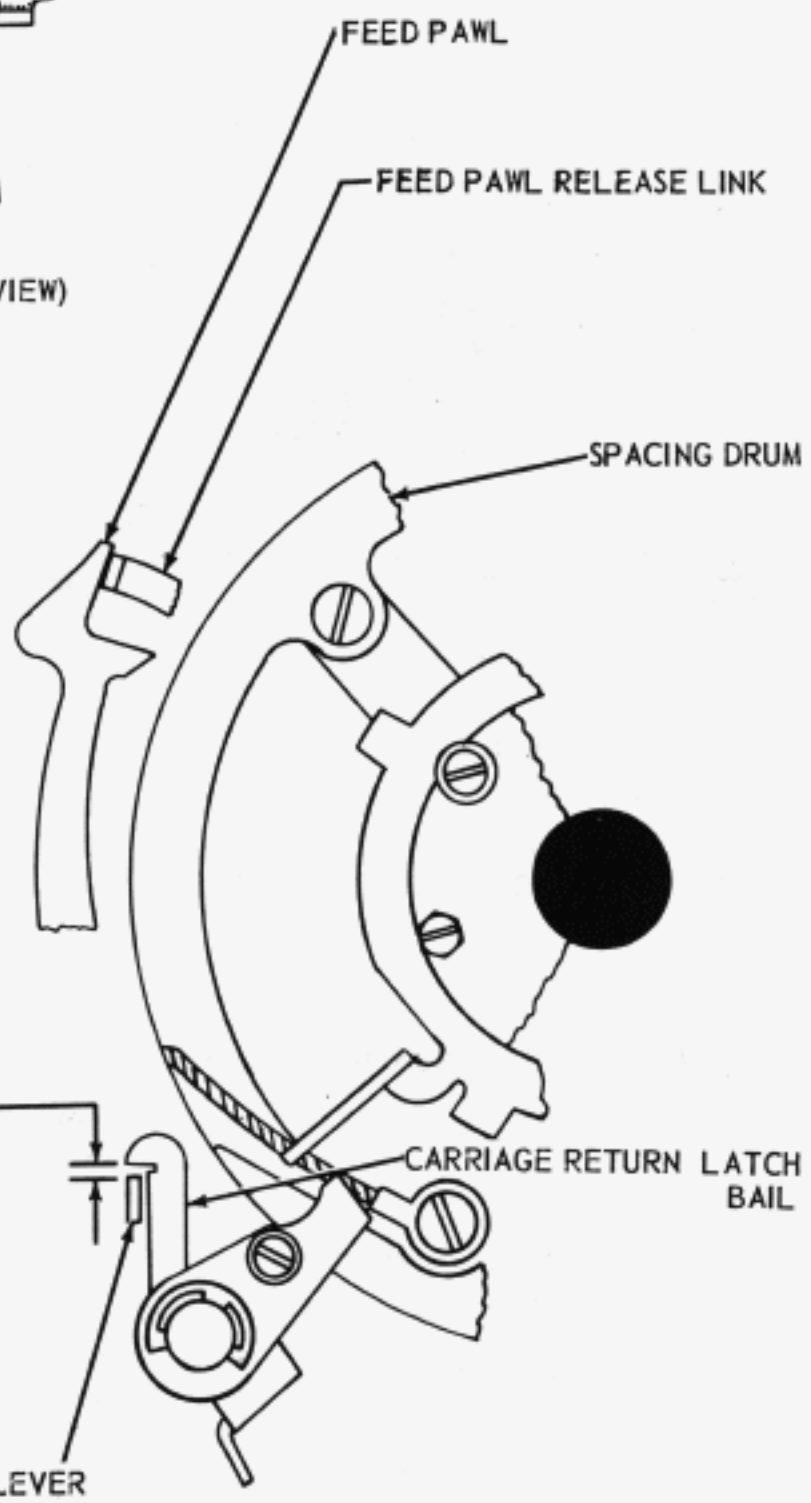

CARRIAGE RETURN LEVER

REQUIREMENT (UNITS EQUIPPED WITH ONE-STOP FUNCTION CLUTCH)

CARRIAGE RETURN FUNCTION SET UP ON SELECTOR. MAIN SHAFT ROTATED UNTIL FUNCTION CLUTCH STOP LUG IS TOWARD BOTTOM OF UNIT. CARRIAGE RETURN FUNCTION PAWL HOOKED OVER ITS FUNCTION BAR. SPACING DRUM HELD SO THAT CARRIAGE RETURN LATCH BAIL IS LATCHED.

CLEARANCE BETWEEN LATCH BAIL AND CARRIAGE RETURN LEVER.

MIN. 0.006 INCH——MAX. 0.035 INCH

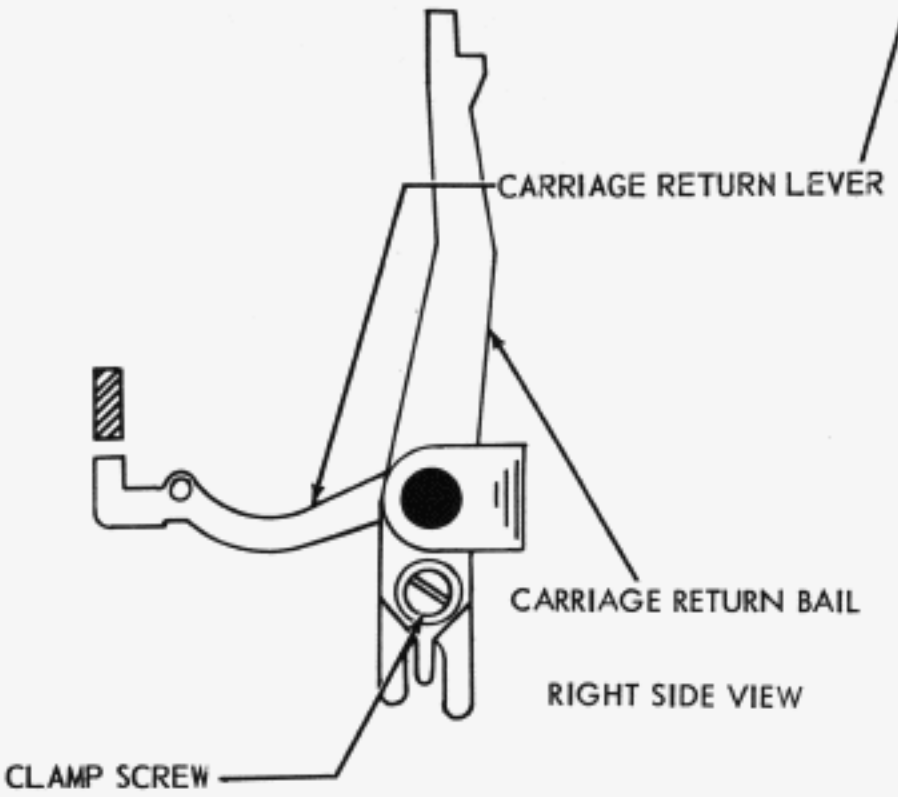

REQUIREMENT (UNITS EQUIPPED WITH TWO-STOP FUNCTION CLUTCH)

SAME, EXCEPT MAIN SHAFT SHOULD BE ROTATED UNTIL FUNCTION CLUTCH IS DISENGAGED IN STOP POSITION THAT RESULTS IN LEAST CLEARANCE.

TO ADJUST

POSITION CARRIAGE RETURN LEVER ON CARRIAGE RETURN BAIL WITH CLAMP SCREW LOOSENED.

FIGURE 1-51. TYPING UNIT, CARRIAGE RETURN MECHANISM

DASH POT VENT SCREW

REQUIREMENT

TYPE BOX CARRIAGE SHOULD RETURN FROM ANY LENGTH OF LINE WITHOUT BOUNCING.

TO CHECK

PRINTER OPERATED AT ANY SPEED FROM AUTOMATIC TRANSMISSION WITH ONE CR AND ONE LF SIGNAL BETWEEN LINES. FIRST CHARACTER OF EACH LINE SHOULD BE PRINTED IN SAME LOCATION AS IF UNIT WAS MANUALLY OPERATED SLOWLY.

TO ADJUST

TURN DOWN VENT SCREW UNTIL SLIGHT PNEUMATIC BOUNCE IS PERCEPTIBLE. BACK OFF SCREW UNTIL EFFECT DISAPPEARS.

FOR DASHPOTS WITH ONE VENT HOLE: THEN BACK SCREW OFF ONE FULL TURN. TIGHTEN NUT.

FOR DASHPOTS WITH TWO VENT HOLES: THEN BACK SCREW OFF 1/4 TURN. TIGHTEN NUT.

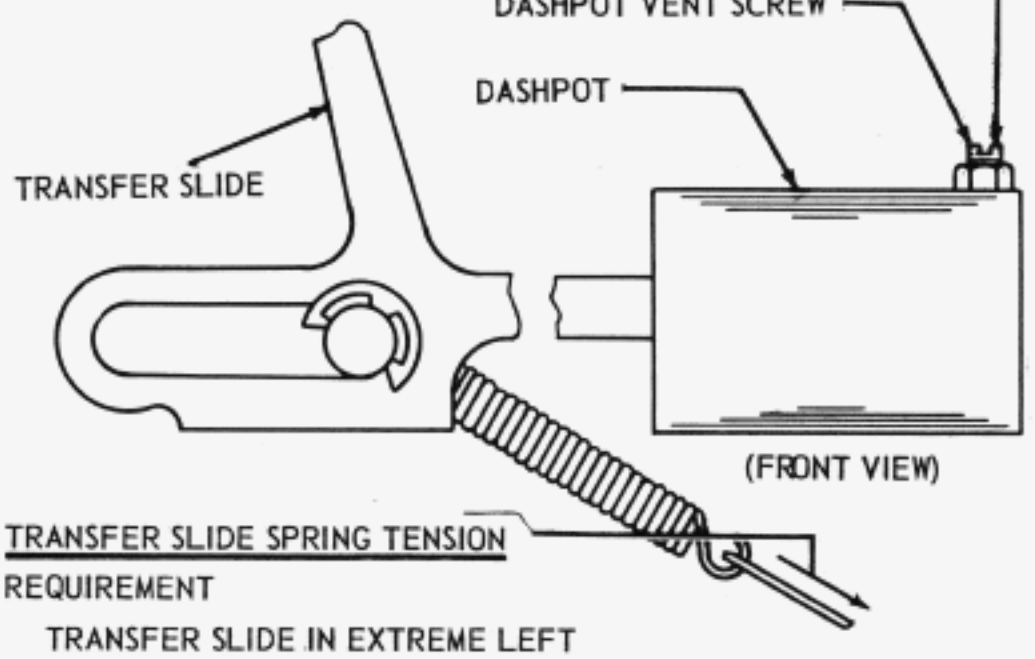

TRANSFER SLIDE SPRING TENSION

REQUIREMENT

TRANSFER SLIDE IN EXTREME LEFT POSITION.
SPRING UNHOOKED.
MIN. 3 1/2 OZS.
MAX. 4 1/2 OZS.
TO PULL SPRING TO INSTALLED LENGTH.

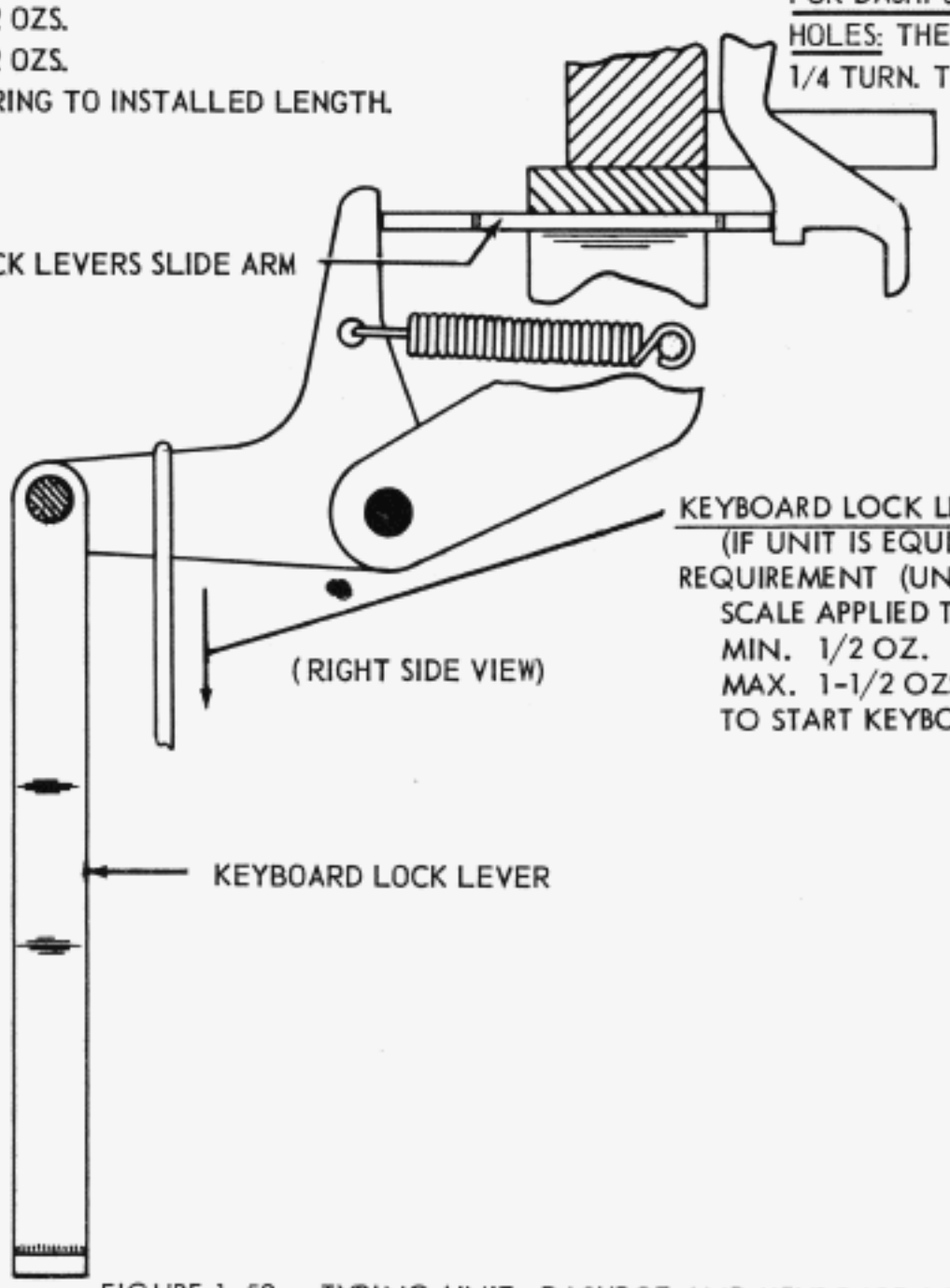

KEYBOARD LOCK LEVER SPRING TENSION
(IF UNIT IS EQUIPPED)

REQUIREMENT (UNIT UPSIDE DOWN)

SCALE APPLIED TO BELL CRANK
MIN. 1/2 OZ.
MAX. 1-1/2 OZS.
TO START KEYBOARD LOCK LEVER MOVING

FIGURE 1-52. TYPING UNIT, DASHPOT AND KEYBOARD LOCK MECHANISMS

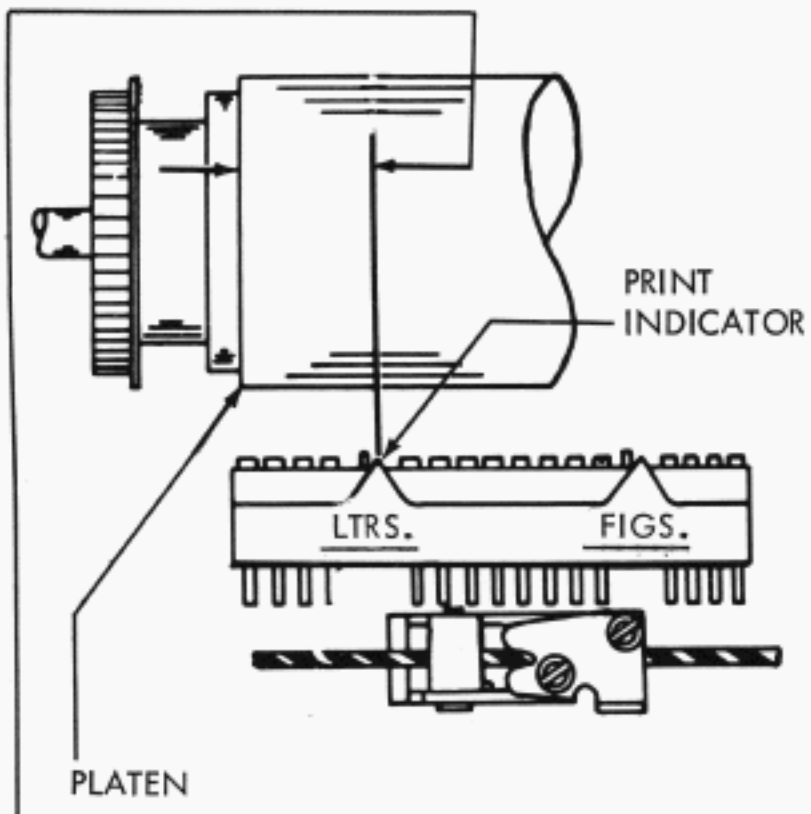

NOTES

1. WHEN ADJUSTMENTS ON THIS PAGE ARE MADE, CHECK RELATED REQUIREMENTS IN FIGURES 1-41, 1-54 & 1-57.
2. FOR SPROCKET FEED PRINTER REQUIREMENTS REFER TO ADJUSTMENTS IN FIGURES 2-8 THROUGH 2-15.
3. LEFT MARGIN MAY BE VARIED AS REQUIRED FROM ZERO TO ONE INCH. MAXIMUM RANGE OF ADJUSTMENT FOR MECHANISMS WITH STANDARD (10 CHARACTERS-PER-INCH) SPACING IS AS FOLLOWS:
   (a) FRICTION FEED PLATEN - 85 CHARACTERS
   (b) SPROCKET FEED PLATEN - 74 CHARACTERS
4. PRINTING CARRIAGE POSITION REQUIREMENT REFER TO STANDARD ADJUSTMENT --- FIGURE 1-57.
5. FOR EARLY DESIGN REFER TO FIGURE 4-31.

LEFT MARGIN REQUIREMENTS --- (72 CHARACTER TYPICAL LINE).

(1) WITH TYPE BOX CLUTCH DISENGAGED, SPACING DRUM IN ITS RETURN POSITION AND TYPE BOX SHIFTED TO LETTERS POSITION; CLEARANCE BETWEEN LEFT EDGE OF PLATEN AND LETTERS PRINT INDICATOR. (SEE NOTE 3).
MIN. 15/16 INCH --- MAX. 1-1/16 INCH.

TO ADJUST --- POSITION STOP ARM OF SPACING DRUM* WITH ITS CLAMP SCREWS LOOSENED.

(2) WITH SPACING CLUTCH DISENGAGED, FRONT SPACING FEED PAWL FARTHEST ADVANCED, SPACING DRUM FULLY RETURNED (DASH POT PLUNGER DEPRESSED FULLY) PLAY IN SPACING SHAFT GEAR (FIG. 1-36) TAKEN UP IN CLOCK-WISE DIRECTION; CLEARANCE BETWEEN PAWL AND SHOULDER OF RATCHET WHEEL TOOTH IMMEDIATELY AHEAD.
MIN. SOME --- MAX. 0.008 INCH.

(3) THE REAR PAWL, WHEN FARTHEST ADVANCED, SHOULD DROP INTO INDENTATION BETWEEN RATCHET WHEEL TEETH AND SHOULD BOTTOM FIRMLY IN NOTCH.

TO ADJUST --- REFINE REQUIREMENT (1) ABOVE.

*SHIFT TYPE BOX TO LTRS. POSITION, RETURN PRINT CARRIAGE TO ITS LEFT POSITION AND LOOSEN CARRIAGE RETURN RING MOUNTING SCREWS (4). HOLD CARRIAGE RETURN RING IN INTS COUNTER-CLOCKWISE POSITION, AND POSITION TYPE BOX SO THAT ITS LTRS. INDICATOR ALIGNS WITH REQUIRED MARGIN. TIGHTEN MOUNTING SCREWS.

AUTOMATIC CR/LF BELL CRANK SPRING REQUIREMENT --- (FOR UNITS SO EQUIPPED).
WITH FUNCTION CLUTCH DISENGAGED.
MIN. 2-1/2 OZS. --- MAX. 7 OZS.
TO MOVE THE BELL CRANK.

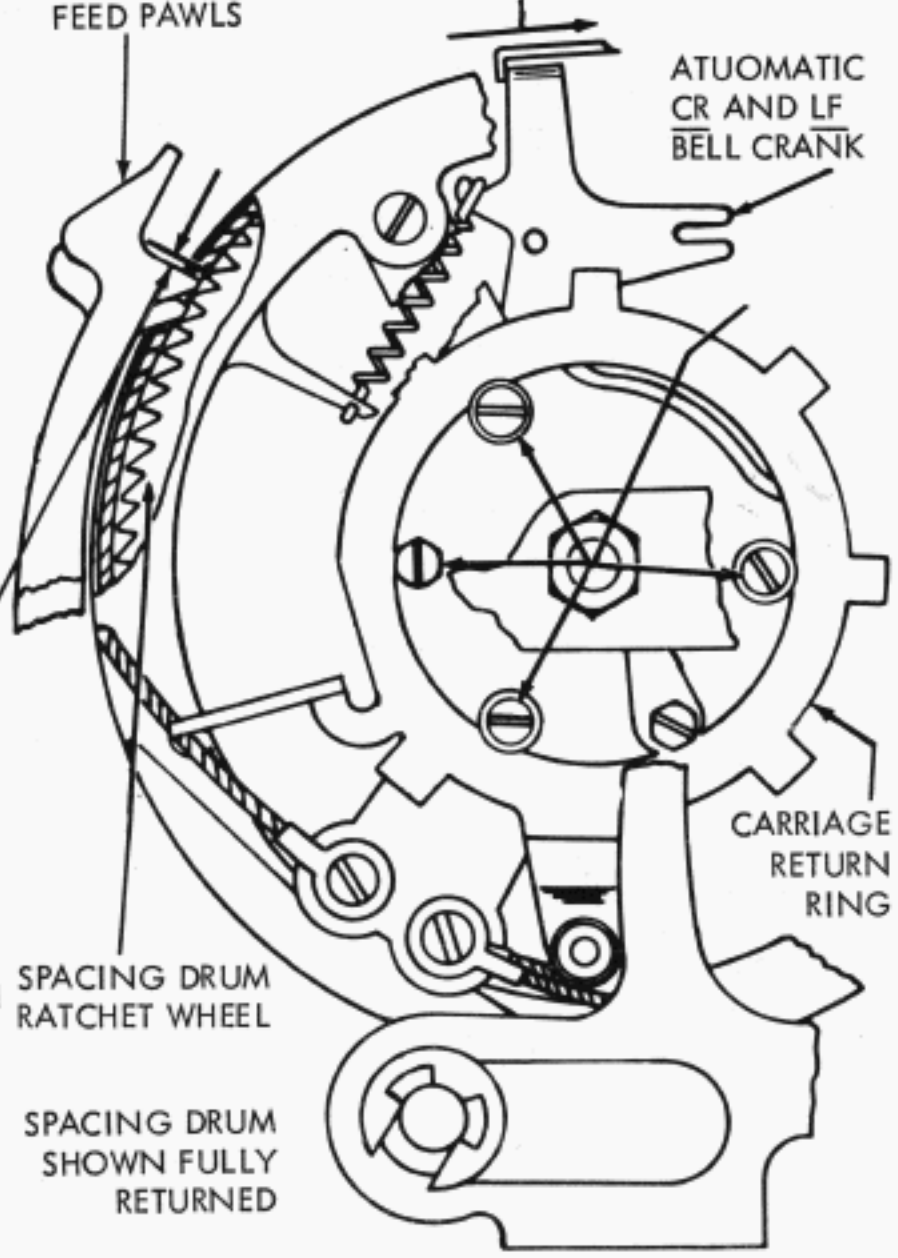

FIGURE 1-53 TYPING UNIT, CARRIAGE RETURN MECHANISM

NOTE: CHECK RELATED ADJUSTMENTS, FIGURES 1-41, 1-53 AND 1-57, IF THE FOLLOWING ADJUSTMENTS ARE REMADE.

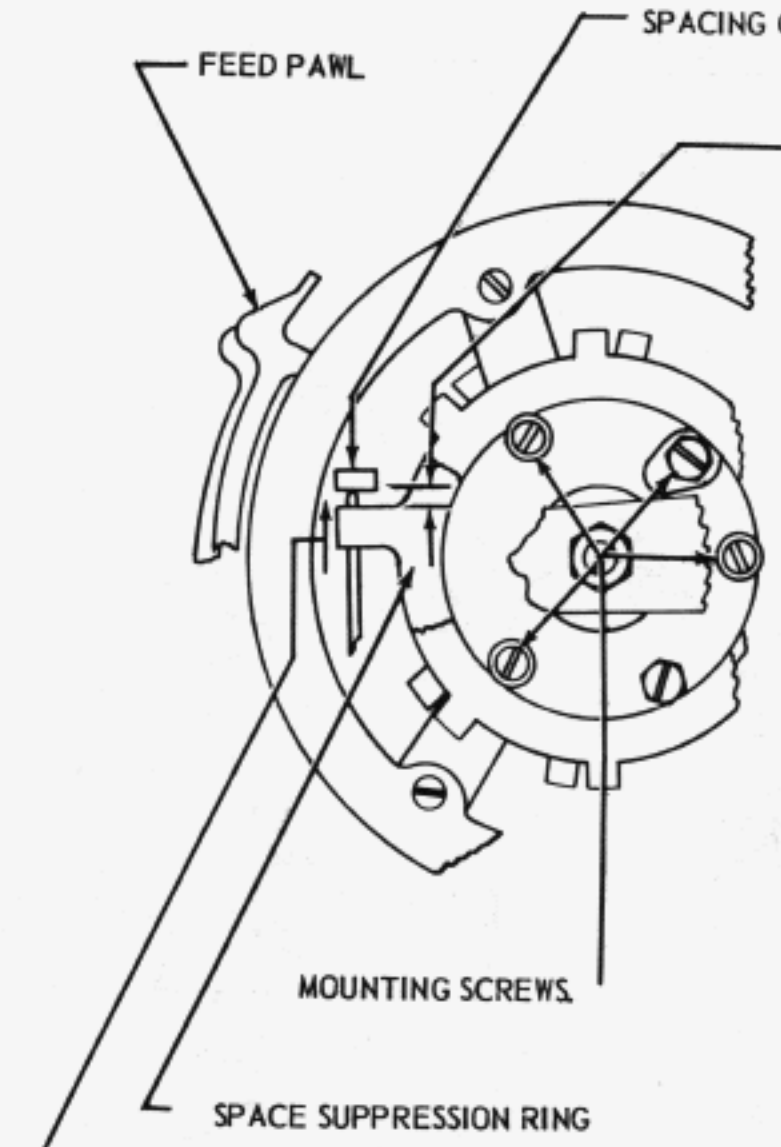

RIGHT MARGIN

REQUIREMENT

TYPE BOX CLUTCH DISENGAGED. CARRIAGE IN POSITION TO PRINT CHARACTER ON WHICH SPACING CUTOUT IS TO OCCUR. FRONT FEED PAWL FARTHEST ADVANCED. SPACING CUTOUT TRANSFER BAIL HELD IN ITS UPPERMOST POSITION. ON UNITS HAVING TWO PIECE SPACING CUTOUT BAIL PUSH THE CUTOUT BAIL TOWARDS REAR OF UNIT THROUGH HOLE IN FRONT PLATE. CLEARANCE BETWEEN EXTENSION ON SPACE SUPPRESSION RING AND TRANSFER BAIL
MIN. 0.006 INCH — MAX. 0.025 INCH

TO ADJUST

POSITION SPACE SUPPRESSION RING WITH FOUR INDICATED MOUNTING SCREWS LOOSENED.

NOTE

(1) RANGE OF ADJUSTMENT IS FROM 0 TO 85 CHARACTERS.
(2) ON UNITS EQUIPPED WITH AUTOMATIC CARRIAGE RETURN - LINE FEED RING, THIS ADJUSTMENT IS NOT APPLICABLE. (SEE FIGURE 1-71)

SPACING CUTOUT TRANSFER BAIL SPRING

REQUIREMENT

MIN. 1 OZ.
MAX. 3-1/2 OZS.
TO START BAIL MOVING.

NOTE: FOR EARLIER DESIGN SEE FIGURE 4-32

FIGURE 1-54. TYPING UNIT, SPACE SUPPRESSION

DECELERATING SLIDE SPRING TENSION

REQUIREMENT

PRINTING BAIL IN DOWNWARD POSITION. PRINTING CARRIAGE AND DECELERATING SLIDE ASSEMBLY IN RIGHT HAND POSITION.
MIN. 1/2 OZ.
MAX. 1 1/2 OZS.
TO START THE SLIDE MOVING.
WITH THE PRINTING CARRIAGE AND DECELERATING SLIDE IN THEIR LEFT HAND POSITION
CHECK THE LEFT HAND DECELERATING SLIDE SPRING

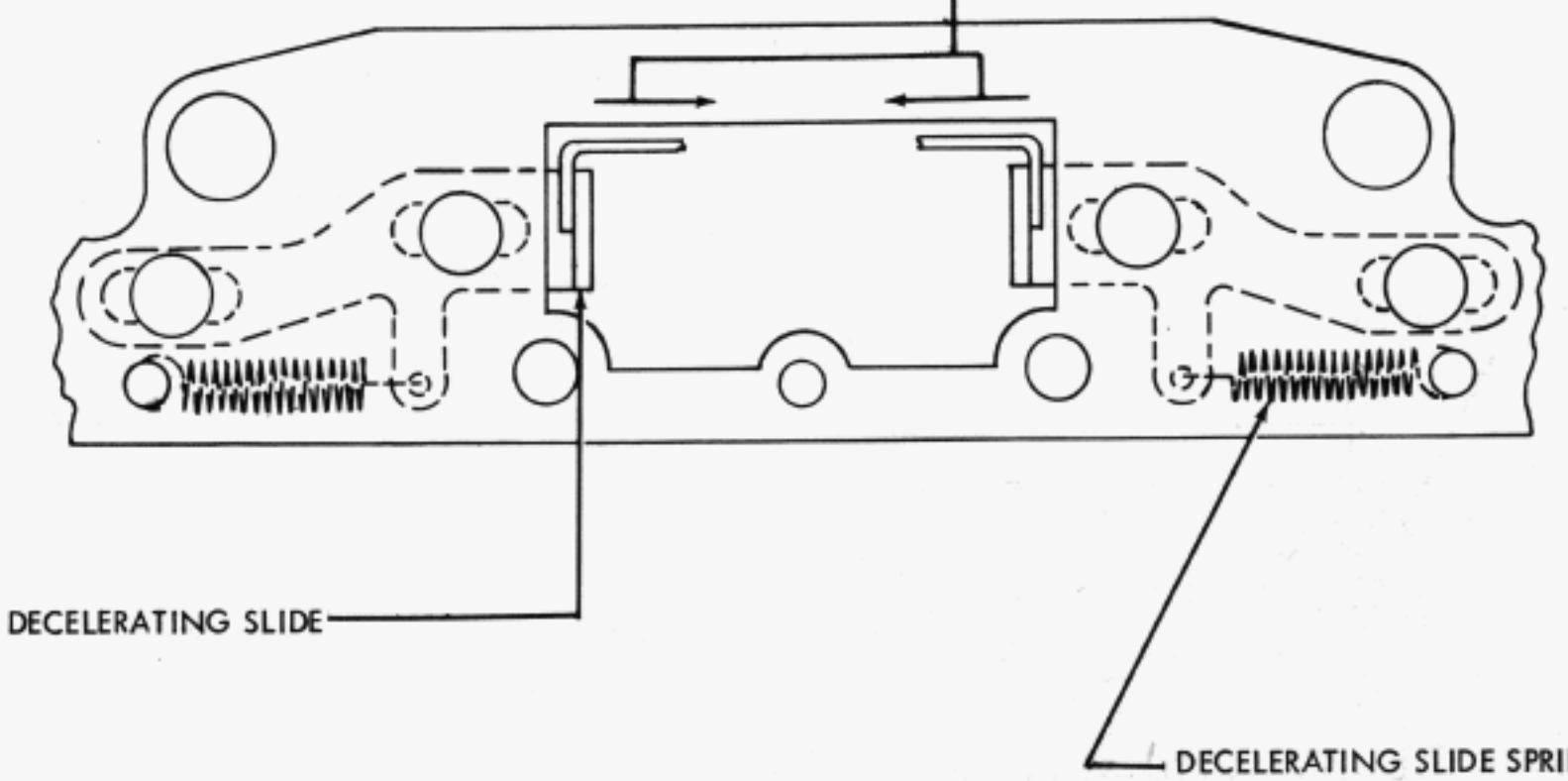

FIGURE 1-55. TYPING UNIT, DECELERATING SLIDE, FRONT VIEW

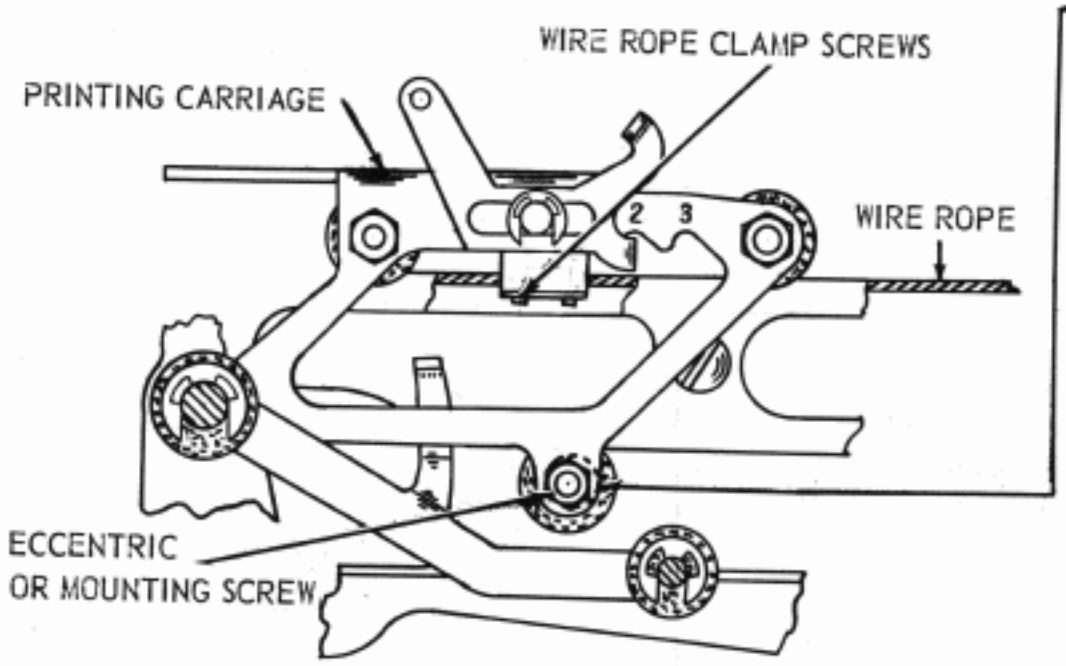

PRINTING CARRIAGE LOWER ROLLER

REQUIREMENT

CARRIAGE WIRE ROPE CLAMP SCREWS LOOSENED. PLAY OF CARRIAGE ON TRACK-MIN. WITHOUT BIND, THROUGHOUT TRACKS FULL LENGTH

TO ADJUST (ECCENTRIC BUSHING)

POSITION LOWER ROLLER WITH SCREW NUT LOOSENED. KEEP HIGH PART OF ECCENTRIC (CHAMFERED CORNER) TOWARD THE RIGHT

TO ADJUST (SLIDING SCREW)

POSITION LOWER ROLLER WITH MOUNTING SCREW LOOSENED.

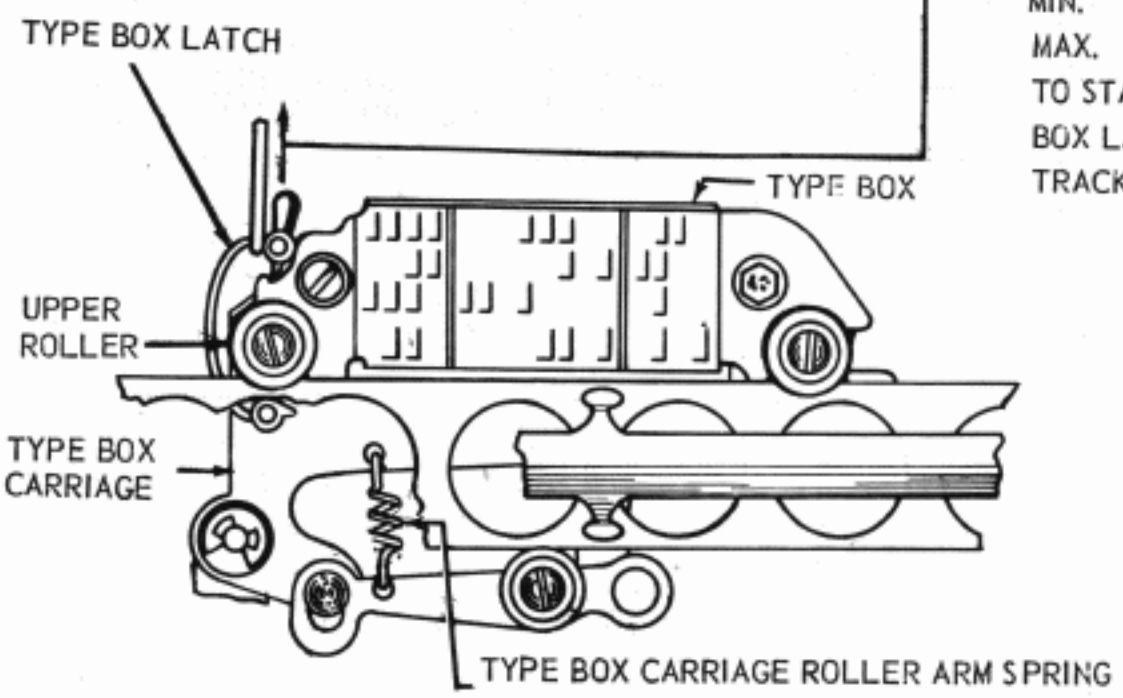

TYPE BOX CARRIAGE ROLLER ARM SPRING

REQUIREMENT

MIN. 28 OZS.

MAX. 36 OZS.

TO START UPPER ROLLER, NEAREST TYPE BOX LATCH, MOVING AWAY FROM CARRIAGE TRACK.

NOTE: FOR EARLIER DESIGN SEE FIGURE 4-33

FIGURE 1-56. TYPING UNIT, PRINTING AND TYPE BOX CARRIAGE

NOTE: CHECK RELATED ADJUSTMENTS, FIGURES 1-41, 1-49 AND 1-54, IF THE FOLLOWING ADJUSTMENTS ARE REMADE. FOR TYPING UNITS OF EARLIER DESIGN, CHECK RELATED ADJUSTMENTS, FIGURES 4-27, 1-49, 1-50 AND 4-32.

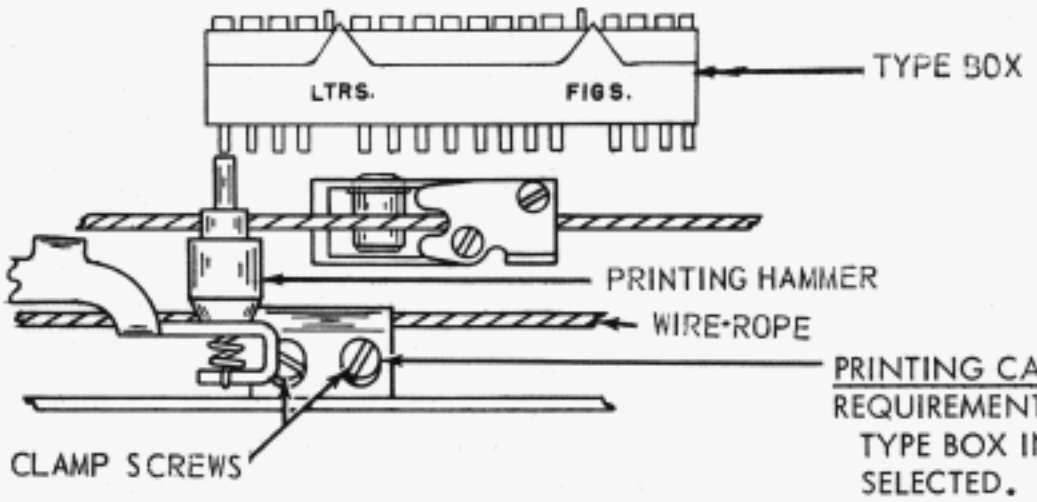

(TOP VIEW)

PRINTING CARRIAGE POSITION

REQUIREMENT

TYPE BOX IN LETTERS POSITION. M TYPE PALLET SELECTED. TYPE BOX IN PRINTING POSITION. M TYPE PALLET SHOULD BE APPROXIMATELY IN CENTER OF PRINTING HAMMER WHEN HAMMER IS JUST TOUCHING M TYPE PALLET. TAKE UP PLAY IN TYPE BOX CARRIAGE IN EACH DIRECTION AND SET HAMMER IN CENTER OF PLAY.

TO ADJUST

POSITION PRINTING CARRIAGE ON WIRE ROPE WITH CLAMP SCREWS LOOSENED.

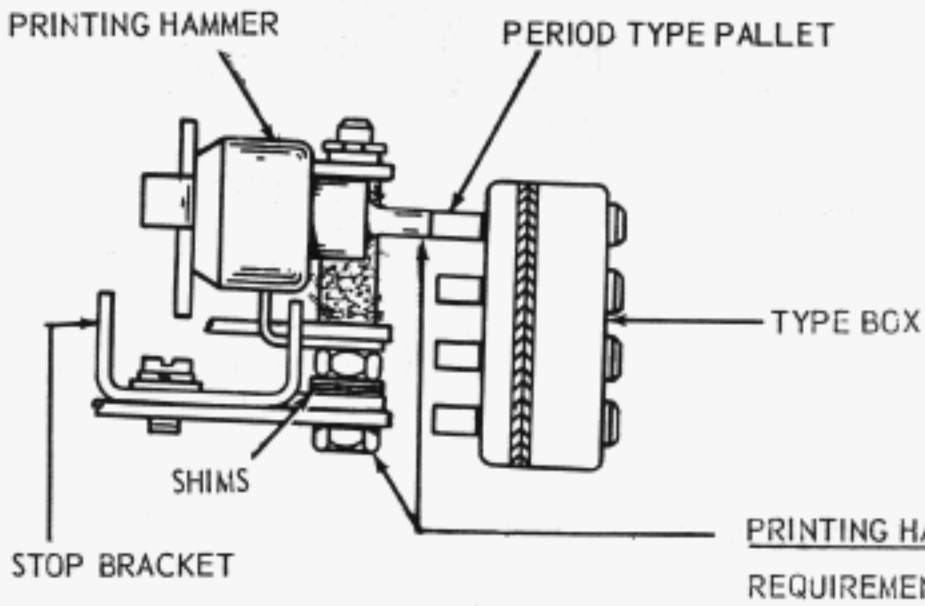

(RIGHT SIDE VIEW)

PRINTING HAMMER BEARING STUD

REQUIREMENT

TYPE BOX AT MIDPOINT OF PLATEN AND IN POSITION TO PRINT PERIOD. PRINTING HAMMER IN CONTACT WITH TYPE PALLET AND PRESSED DOWNWARD AT BEARING POST. FACE OF HAMMER SHOULD BE FULLY ON END OF TYPE PALLET.

TO ADJUST

ADD OR REMOVE SHIMS BETWEEN SHOULDER ON BEARING POST AND STOP BRACKET

FIGURE 1-57 TYPING UNIT, PRINTING CARRIAGE

(A) SHIFT LINKAGE

REQUIREMENT

CARRIAGE NEAR MIDPOINT OF PLATEN. TYPE BOX IN POSITION TO PRINT LETTER "O". MANUALLY BUCKLE RIGHT SHIFT LINKAGE. SHIFT TYPE BOX TO LEFT. FIGURE "9" TYPE PALLET SHOULD BE APPROXIMATELY IN CENTER OF PRINT HAMMER WHEN HAMMER IS JUST TOUCHING "9" TYPE PALLET.

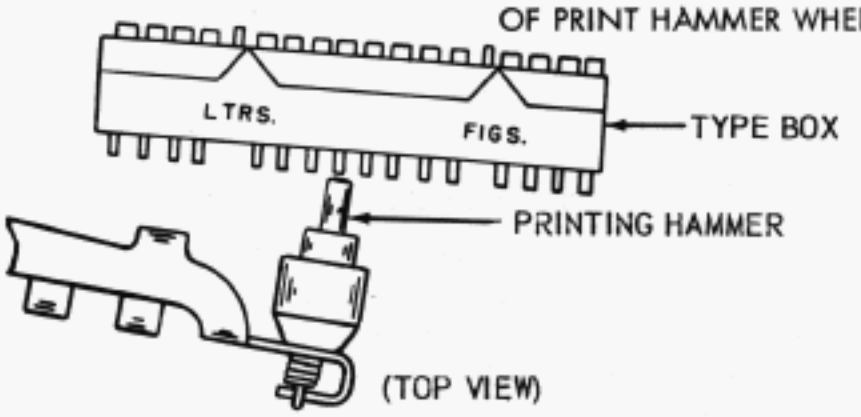

TO ADJUST

POSITION LEFT SHIFT LINKAGE ON OSCILLATOR RAIL WITH TWO CLAMP SCREWS LOOSENED.

TO RECHECK

SHIFT ALTERNATELY FROM "W" TO "2". TAKE UP PLAY IN EACH DIRECTION. REFINE ADJUSTMENT IF NECESSARY.

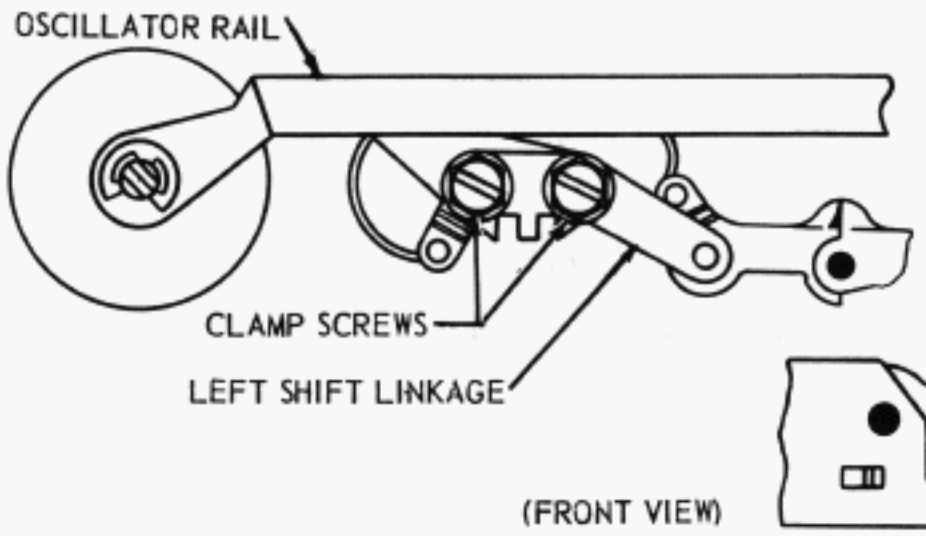

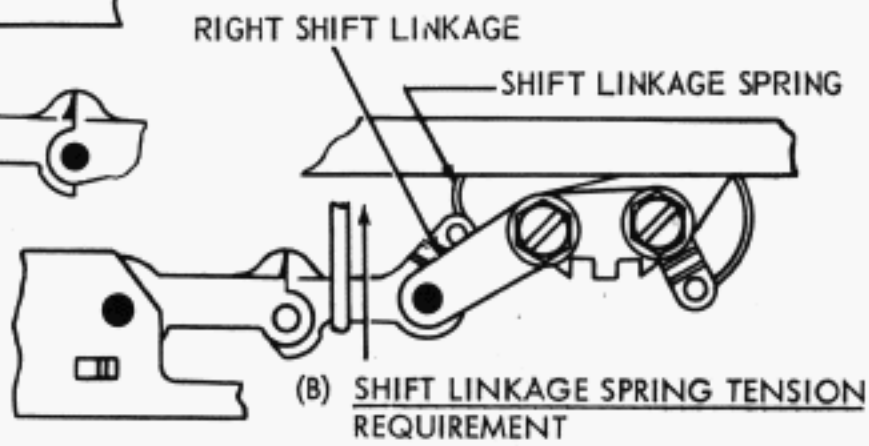

(B) SHIFT LINKAGE SPRING TENSION

REQUIREMENT

LINK IN STRAIGHT POSITION
MIN. 6 OZS.
MAX. 14 OZS.
TO START EACH LINK MOVING.

NOTE: FOR SHIFT MECHANISMS WITH TORSION SPRINGS SEE FIGURE 4-34

FIGURE 1-58 TYPING UNIT, SHIFT MECHANISM

(A) PRINTING TRACK

REQUIREMENT

PRINTING TRACK IN ITS EXTREME DOWNWARD POSITION. BLANK SELECTION IN FIGURES. PRINTING HAMMER OPERATING BAIL LATCHING EXTENSION HELD WITH LEFT FACE IN LINE WITH THE LATCH SHOULDER. PRINTING ARM SLIDE POSITIONED ALTERNATELY OVER EACH TRACK MOUNTING SCREW. PRINTING BAIL RESET EACH TIME. CLEARANCE BETWEEN LATCHING EXTENSION AND OPERATING BAIL LATCH SHOULD BE

MIN. 0.015 INCH

MAX. 0.040 INCH

TO ADJUST

POSITION THE PRINTING TRACK UP OR DOWN WITH ITS MOUNTING SCREWS LOOSENED. HOLD CLEARANCE TO MAXIMUM.

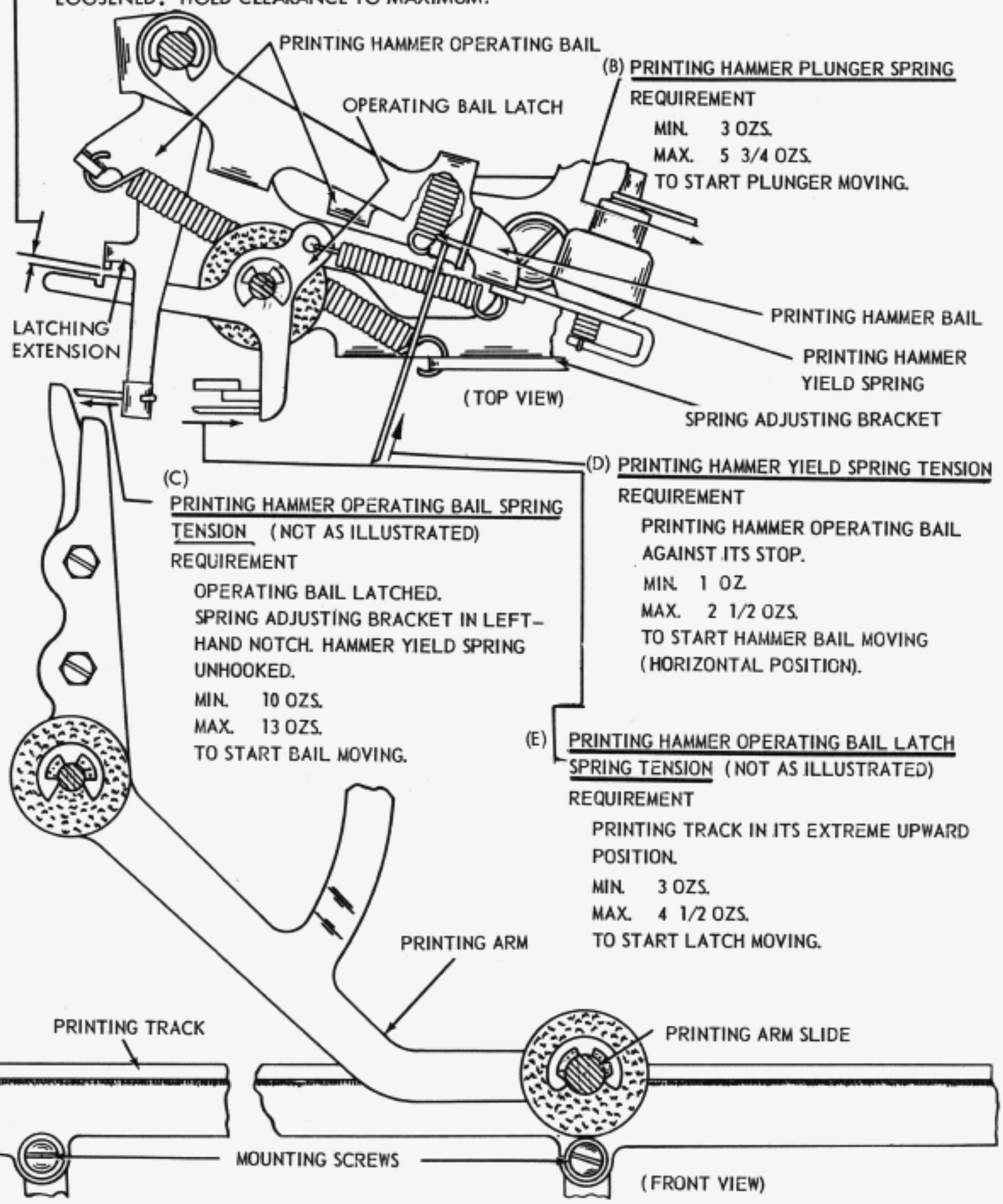

(B) PRINTING HAMMER PLUNGER SPRING

REQUIREMENT

MIN. 3 OZS.

MAX. 5 3/4 OZS.

TO START PLUNGER MOVING.

(C) PRINTING HAMMER OPERATING BAIL SPRING TENSION (NOT AS ILLUSTRATED)

REQUIREMENT

OPERATING BAIL LATCHED. SPRING ADJUSTING BRACKET IN LEFT-HAND NOTCH. HAMMER YIELD SPRING UNHOOKED.

MIN. 10 OZS.

MAX. 13 OZS.

TO START BAIL MOVING.

(D) PRINTING HAMMER YIELD SPRING TENSION

REQUIREMENT

PRINTING HAMMER OPERATING BAIL AGAINST ITS STOP.

MIN. 1 OZ.

MAX. 2 1/2 OZS.

TO START HAMMER BAIL MOVING (HORIZONTAL POSITION).

(E) PRINTING HAMMER OPERATING BAIL LATCH SPRING TENSION (NOT AS ILLUSTRATED)

REQUIREMENT

PRINTING TRACK IN ITS EXTREME UPWARD POSITION.

MIN. 3 OZS.

MAX. 4 1/2 OZS.

TO START LATCH MOVING.

FIGURE 1-59 TYPING UNIT, PRINTING MECHANISM

PRINTING HAMMER STOP BRACKET
REQUIREMENT --- WITH TYPE BOX IN POSITION TO PRINT CHARACTER " M ", PRINTING TRACK IN ITS MAXIMUM DOWNWARD POSITION, AND PRINTING HAMMER STOP BRACKET HELD TOWARD THE PLATEN WITH PRESSURE OF 8 OZS; CLEARANCE BETWEEN PRINTING HAMMER AND"M"TYPE PALLET. (NOTE 1.)
MIN. 0.005 INCH --- MAX. 0.035 INCH AT END OF PLATEN WITH LEAST CLEARANCE
TO ADJUST --- POSITION STOP BRACKET BY MEANS OF ITS TWO MOUNTING SCREWS.

NOTE 1. --- FOR SPROCKET FEED UNITS SEE FIG. 2-9. CERTAIN MULTIPLE FORM UNITS SHOULD BE REFINED FOR A CLEARANCE OF MIN. 0.005 INCH --- MAX. 0.015 INCH. TO IMPROVE LEGIBILITY OF COPY

TYPE PALLET SPRING TENSION
REQUIREMENT
TYPE BOX REMOVED FROM THF UNIT. 8 OZS. SCALE APPLIED VERTICALLY TO THE END OF THE PALLET SHANK.
MIN. 1/4 OZS.
MAX. 3/4 OZS.
TO START PALLET MOVING.

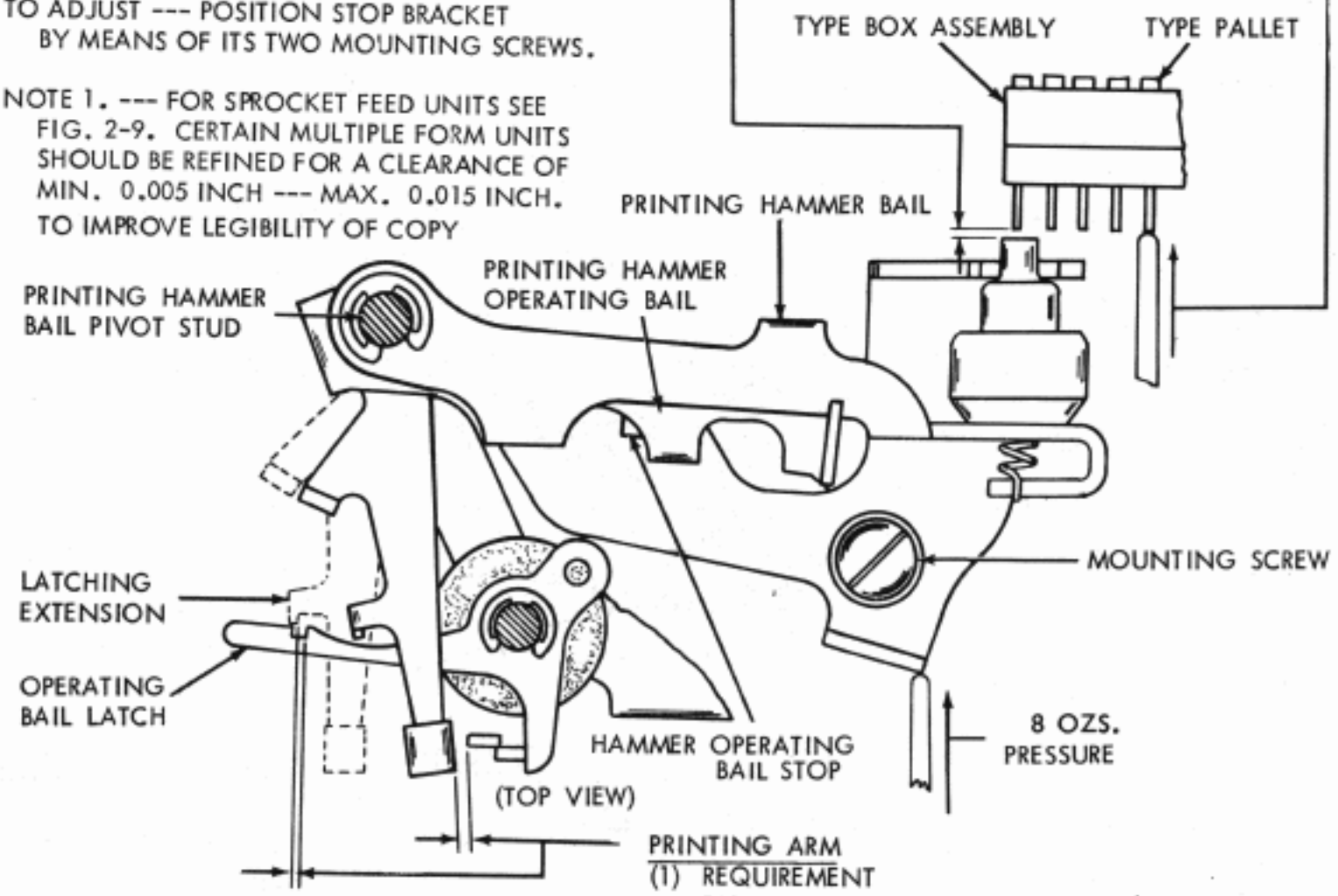

PRINTING ARM
(1) REQUIREMENT
PRINTING TRACK IN MAXIMUM DOWNWARD POSITION.
PRINTING HAMMER OPERATING BAIL AGAINST ITS STOP.
SOME CLEARANCE BETWEEN SECONDARY PRINTING ARM AND FORWARD EXTENSION OF HAMMER OPERATING BAIL.
MAX. 0.015 INCH
WHEN PRINTING ARM SLIDE IS HELD DOWNWARD OVER EACH PRINTING TRACK MOUNTING SCREW FOR MAXIMUM CLEARANCE.
(2) REQUIREMENT
PRINTING TRACK IN UPPERMOST POSITION. LATCHING EXTENSION OF PRINTING HAMMER OPERATING BAIL SHOULD OVERTRAVEL LATCHING SURFACE OF OPERATING BAIL LATCH BY MIN. 0.006 INCH
CHECK RIGHT AND LEFT POSITIONS
TO ADJUST
POSITION SECONDARY PRINTING ARM WITH CLAMP SCREWS LOOSENED.

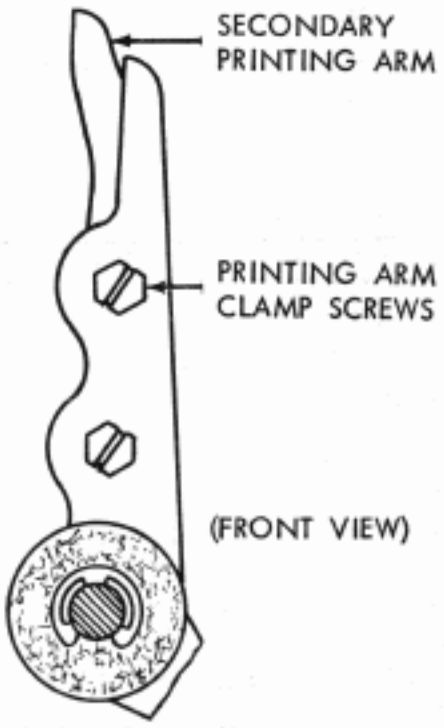

NOTE 2
THE PRINTING ARM ADJUSTMENT SHOULD ALWAYS BE MADE WITH THE PRINTING HAMMER OPERATING BAIL SPRING BRACKET IN THE NO. 1 POSITION. POSITIONS NO. 2 AND 3 ARE TO BE USED ONLY FOR MAKING MULTIPLE COPIES.

NOTE 3
FOR EARLIER DESIGN SEE FIGURE 4-35

FIGURE 1-60. TYPING UNIT, PRINTING MECHANISM

NOTE: THIS ADJUSTMENT APPLIES ONLY TO UNITS SO EQUIPPED AND SHOULD BE MADE WITH THE TYPEBOX IN ITS UPPER POSITION.

NOTE RECHECK PRINT HAMMER STOP BRACKET ADJUSTMENT FIG. 1-60. AND READJUST IF NECESSARY.

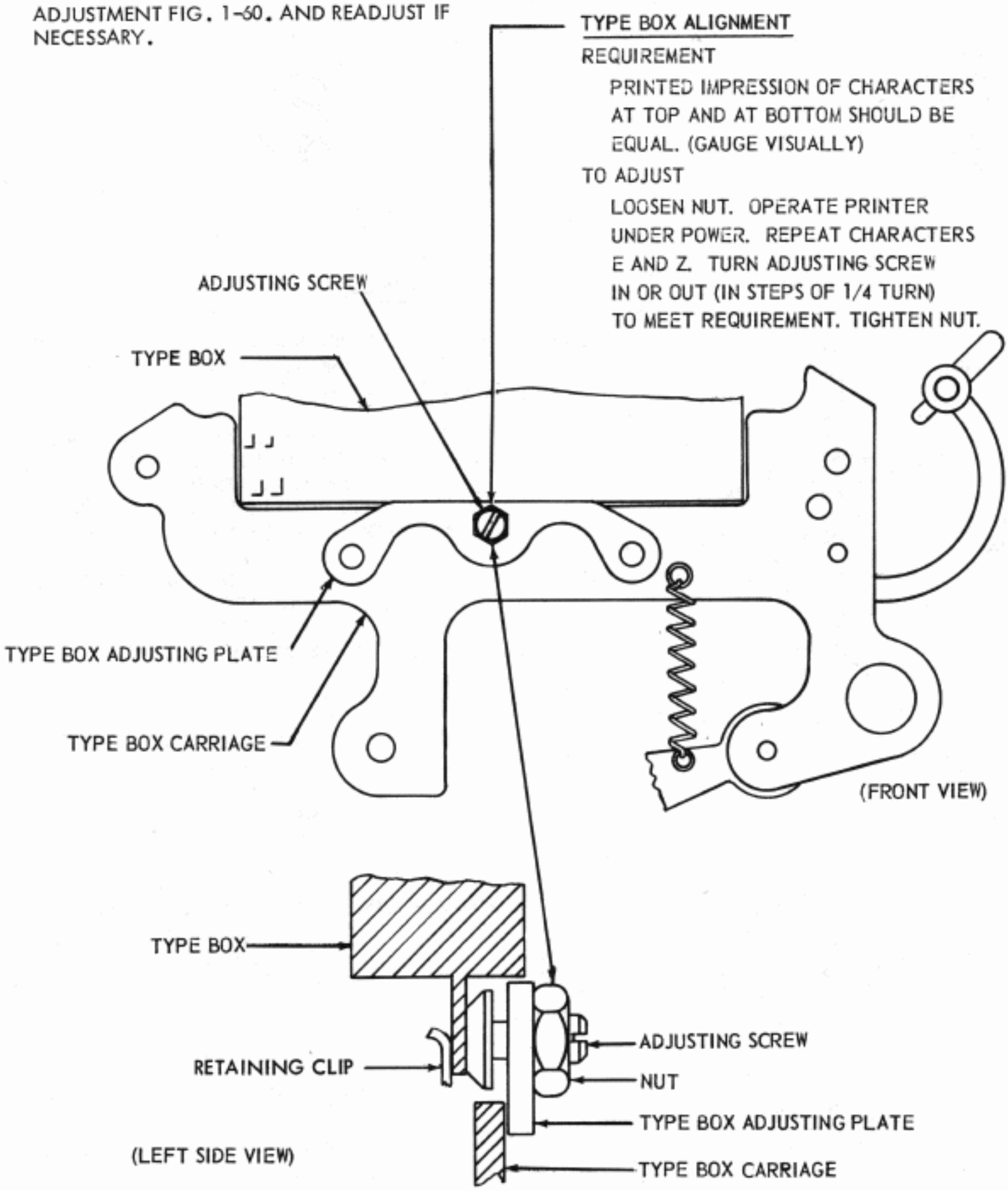

NOTE: SOME TYPING UNITS ARE EQUIPPED WITH A RIBBON GUIDE WHICH HAS A TYPE BOX RETAINING CLIP WITH A LIMITED YIELD. IN CASES WHERE IT IS NECESSARY TO BACK THE ADJUSTING SCREW OUT TO PROVIDE HEAVIER PRINTING AT THE TOP OF A CHARACTER, IT MAY BE NECESSARY TO BEND THE SPRING CLIP ON THE RIBBON GUIDE TOWARD THE FRONT SO THAT THE TAB AT THE BOTTOM OF THE TYPE BOX IS HELD AGAINST THE HEAD OF THE ADJUSTING SCREW.

FIGURE 1-61. TYPING UNIT, TYPE BOX

CHECK THE TWO COLOR RIBBON REQUIREMENTS FIGS. 2-84; 2-85
ON UNITS SO EQUIPPED

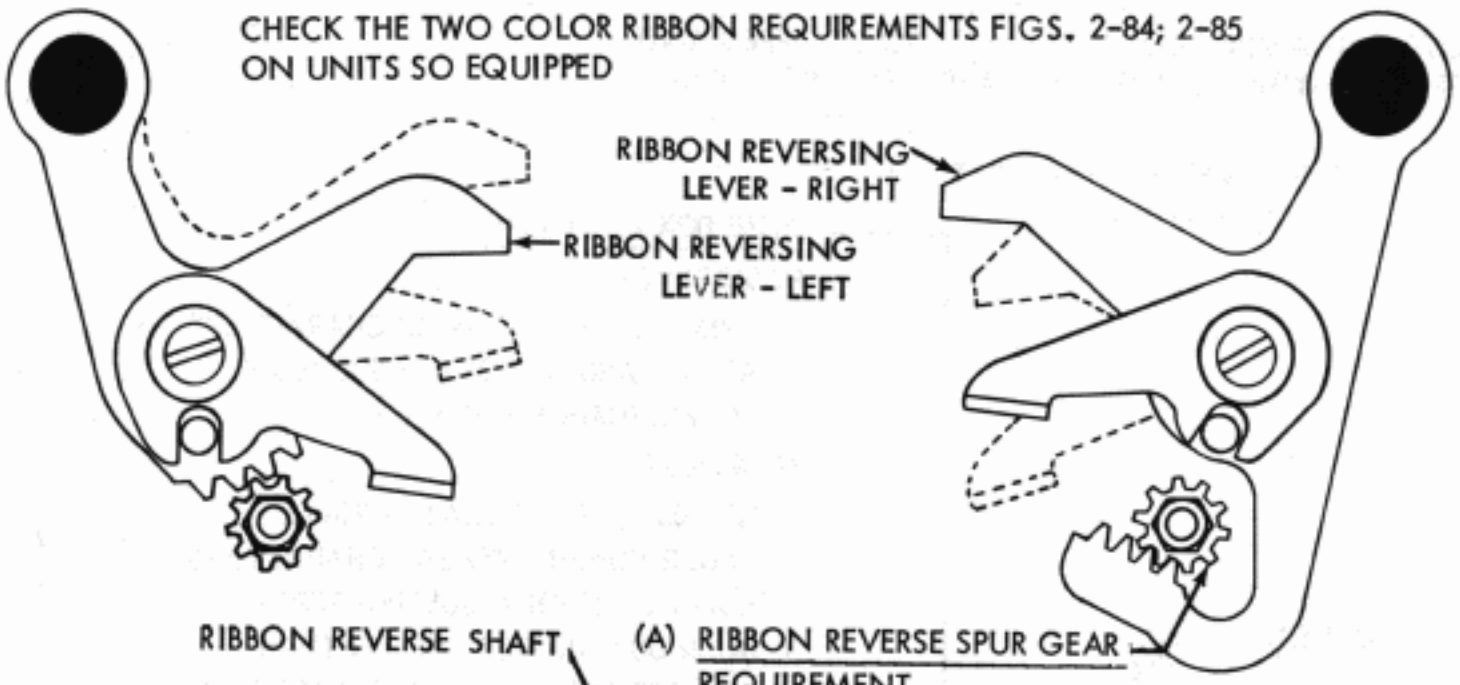

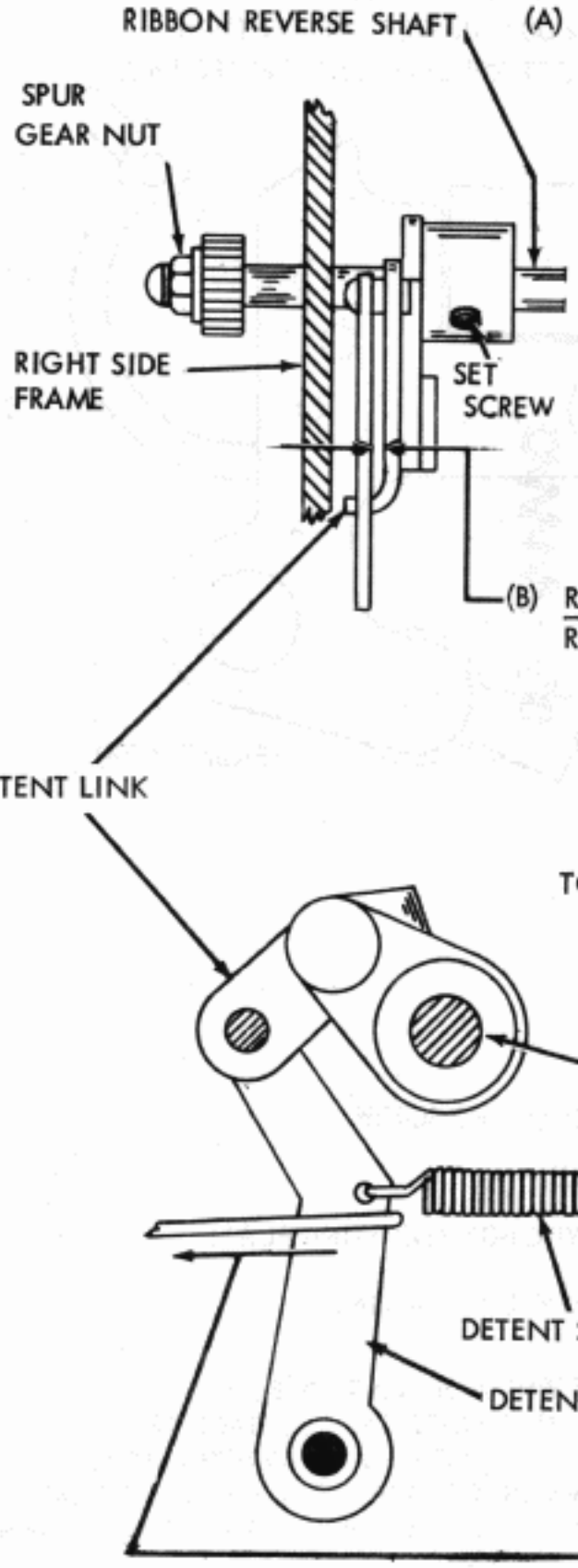

(A) RIBBON REVERSE SPUR GEAR

REQUIREMENT

WHEN RIGHT REVERSING LEVER IS IN MAXIMUM DOWNWARD POSITION, THE LEFT REVERSING LEVER SHOULD BE IN ITS MAXIMUM UPWARD POSITION.

TO ADJUST

LOOSEN THE SET SCREWS IN THE DETENT CAM. LOOSEN THE LEFT SPUR GEAR NUT. SECURELY TIGHTEN THE RIGHT SPUR GEAR NUT. MOVE THE RIGHT REVERSING LEVER TO ITS MAXIMUM DOWNWARD POSITIION AND HOLD LEFT REVERSING LEVER IN ITS MAXIMUM UPWARD POSITION. THEN TIGHTEN THE LEFT SPUR GEAR NUT.

NOTE: ROTATE TYPE BOX CLUTCH 1/2 TURN AND MOVE RIGHT REVERSING LEVER UNDER THE SEGMENT. THERE SHOULD BE SOME CLEARANCE BETWEEN SEGMENT AND THE LEVER. REFINE ADJ. IF NECESSARY

(B) RIBBON REVERSE DETENT

REQUIREMENT

RIBBON REVERSE DETENT LINK BUCKLED IN ITS DOWNWARD POSITION, CLEARANCE BETWEEN DETENT LINK AND DETENT LEVER

MIN. SOME --- MAX. 0.055 INCH

WHEN PLAY IN THE LEVER IS TAKEN UP LIGHTLY TOWARD THE RIGHT SIDE OF THE PRINTER.

TO ADJUST

HOLD LEFT RIBBON REVERSING LEVER IN ITS DOWNWARD POSITION, POSITION DETENT LINK, AND TIGHTEN THE UPPER SET SCREW IN THE HUB OF THE DETENT LINK. BUCKLE THE DETENT LINK UPWARD AND TIGHTEN LOWER SET SCREW.

NOTE: FOR EARLIER DESIGN SEE FIGURE 4-36

(C) RIBBON REVERSE DETENT LEVER SPRING TENSION
(IF UNIT IS EQUIPPED)

REQUIREMENT

DETENT LINK BUCKLED IN UPWARD POSITION

MIN. 10 OZS.
MAX. 18 OZS.

TO START DETENT LEVER MOVING TOWARD REAR.

FIGURE 1-62. TYPING UNIT, RIBBON REVERSE MECHANISM (TOGGLE LINK DETENT)

RIBBON FEED LEVER BRACKET

(1) REQUIREMENT (LEFT-HAND MECHANISM)

LEFT REVERSING LEVER IN UPWARD POSITION.
RIBBON MECHANISM IN UPPER POSITION.
RATCHET WHEEL HELD AGAINST THE DETENT LEVER.
CLEARANCE BETWEEN THE FRONT FACE OF THE FEED LEVER AND THE SHOULDER OF A TOOTH ON THE RATCHET WHEEL

MIN. 0.015 INCH
MAX. 0.035 INCH

TO ADJUST

POSITION THE FEED LEVER BRACKET WITH ITS MOUNTING SCREWS LOOSENED.

(2) REQUIREMENT (RIGHT-HAND MECHANISM)

RIGHT REVERSING LEVER AND RIBBON MECHANISM IN UPWARD POSITION.
ADJUST FEED LEVER BRACKET IN THE SAME MANNER

NOTE

ROTATE THE MAIN SHAFT. THE RATCHET WHEEL SHOULD STEP ONE TOOTH ONLY WITH EACH OPERATION

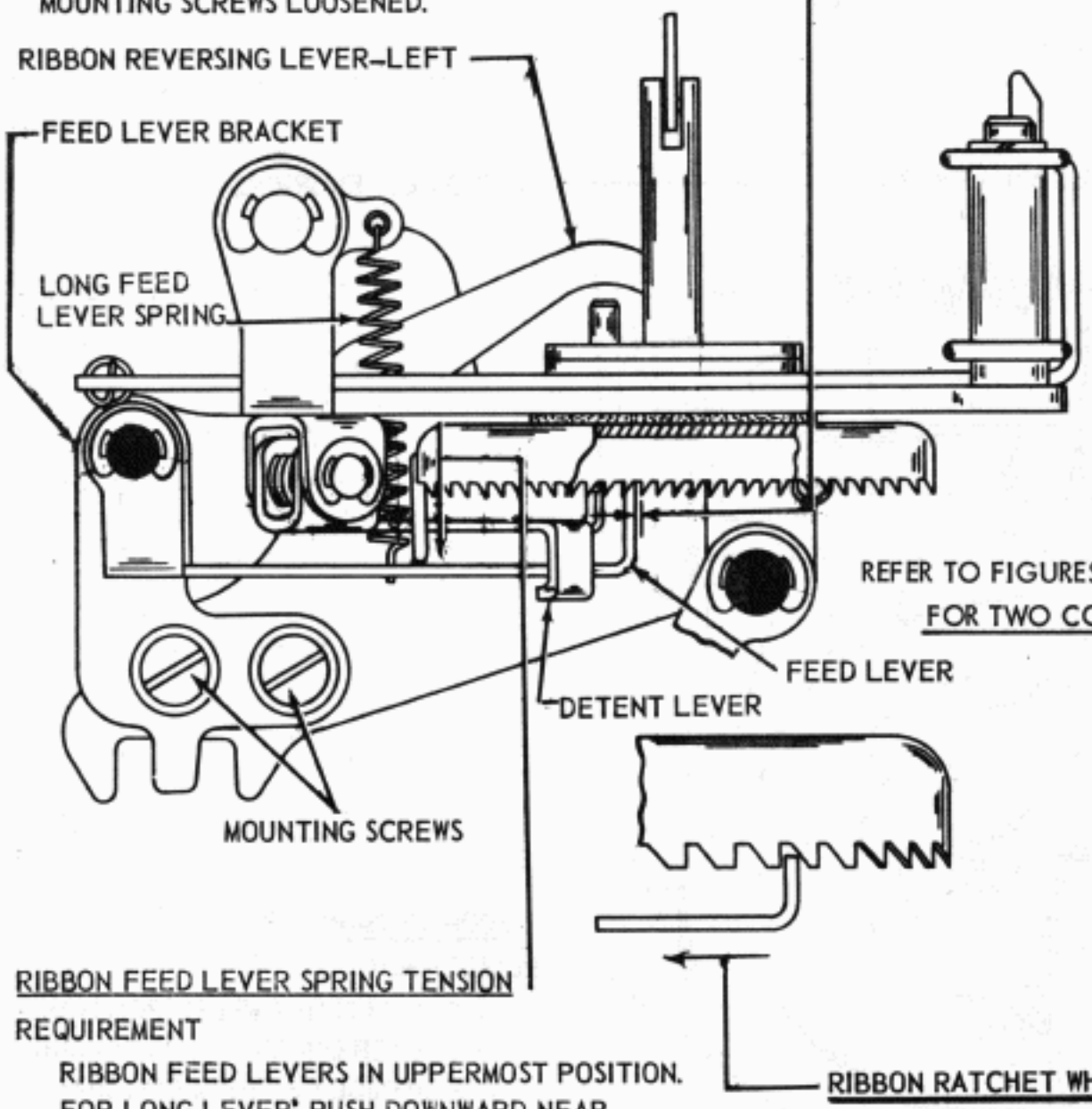

REFER TO FIGURES 2-84 AND 2-85 FOR TWO COLOR RIBBON MECHANISM

RIBBON FEED LEVER SPRING TENSION

REQUIREMENT

RIBBON FEED LEVERS IN UPPERMOST POSITION.
FOR LONG LEVER: PUSH DOWNWARD NEAR ITS SPRING.
FOR SHORT LEVER: PUSH DOWNWARD AT POINT NEAR LONG LEVER SPRING.
MIN. 3/4 OZ.
MAX. 2 OZS.
TO START FEED LEVERS MOVING.
MEASURE ALL FOUR PAWLS.

NOTE: IF MINIMUM REQUIREMENT OF SHORT LEVER IS NOT MET, PULL LOWER END OF TORSION SPRING TO REAR.

RIBBON RATCHET WHEEL FRICTION SPRING TENSION *

REQUIREMENT

FEED LEVERS DISENGAGED.
MIN. 3 OZS.
MAX. 7 1/2 OZS.
TO START THE RATCHET WHEEL MOVING.

* TWO COLOR RIBBON REQUIREMENT

MIN 3 OZS. --- MAX 4 OZS
TO START RATCHET WHEEL MOVING

FIGURE 1-63 TYPING UNIT, RIBBON FEED MECHANISM, LEFT SIDE VIEW

RIBBON LEVER SPRING TENSION

REQUIREMENT

MIN. 1 1/2 OZS.
MAX. 3 OZS.
TO START THE LEVER MOVING. CHECK BOTH RIGHT AND LEFT SPRINGS

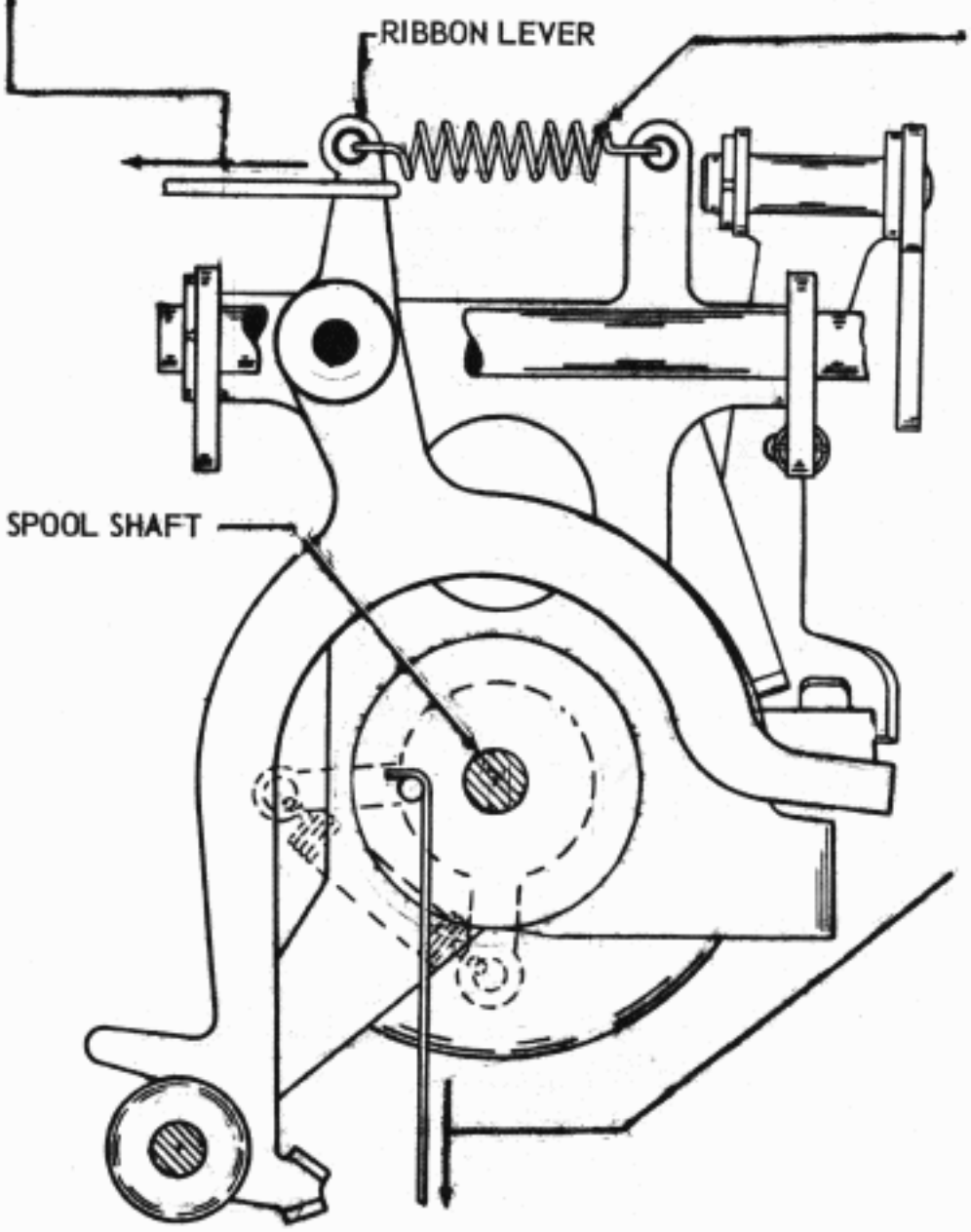

RIBBON TENSION SPRING

REQUIREMENT

RIBBON RATCHET WHEEL POSITIONED SO THAT EACH DRIVING PIN IS TOWARD THE OUTSIDE OF THE SPOOL SHAFT.
MIN. 3 OZS.
MAX. 5 1/2 OZS.
TO START SPOOL SHAFT MOVING.

FIGURE 1-64 TYPING UNIT, RIBBON REVERSE MECHANISM, TOP VIEW

NOTE: REFER TO BULLETIN 1149B FOR INSTRUCTIONS ON CODING THE UNCODED FUNCTION BAR.

(A)
FUNCTION LEVER SPRING TENSION

NOTE: IF A FUNCTION LEVER OPERATES A CONTACT OR A SLIDE, HOLD OFF THE CONTACT OR SLIDE WHEN CHECKING THE SPRING TENSION

REQUIREMENT

FUNCTION LEVER IN UNOPERATED POSITION.
SUPPRESSION BAIL HELD FORWARD.
MIN. 1 1/2 OZS.
MAX. 2 3/4 OZS.
TO START FUNCTION LEVER MOVING.
CHECK EACH SPRING.

(B) FUNCTION PAWL SPRING TENSION

REQUIREMENT

REAR END OF FUNCTION PAWL RESTING ON FUNCTION BAR
ONE STOP FUNCTION CLUTCH UNITS:
MIN. 3 OZS.
MAX. 5 OZS..
TWO STOP FUNCTION CLUTCH UNITS:
MIN. 7 OZS.
MAX. 10 1/2 OZS.
TO START PAWL MOVING.
CHECK EACH SPRING.

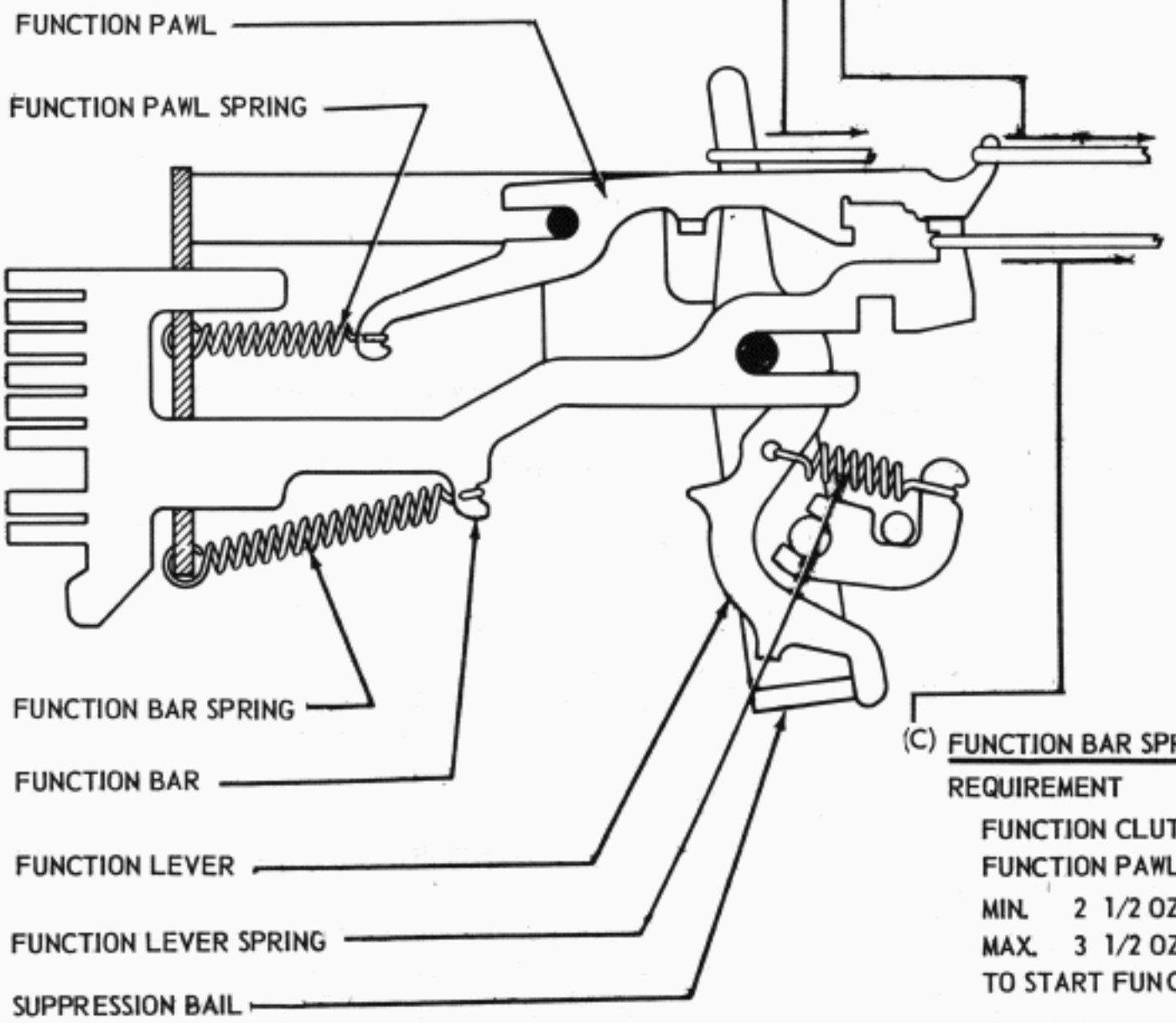

(C) FUNCTION BAR SPRING TENSION

REQUIREMENT

FUNCTION CLUTCH DISENGAGED.
FUNCTION PAWL HELD AWAY.
MIN. 2 1/2 OZS.
MAX. 3 1/2 OZS.
TO START FUNCTION BAR MOVING.

CAUTION: SEVERE WEAR TO THE POINT OF OPERATIONAL FAILURE WILL RESULT IF THE TELETYPEWRITER IS OPERATED WITHOUT EACH FUNCTION PAWL HAVING EITHER A RELATED FUNCTION BAR OR, WHERE A FUNCTION BAR IS MISSING, A RELATED FUNCTION PAWL CLIP TO HOLD THE FUNCTION PAWL AWAY FROM THE STRIPPER BLADE.

FIGURE 1-65 TYPING UNIT, STUNT BOX MECHANISM

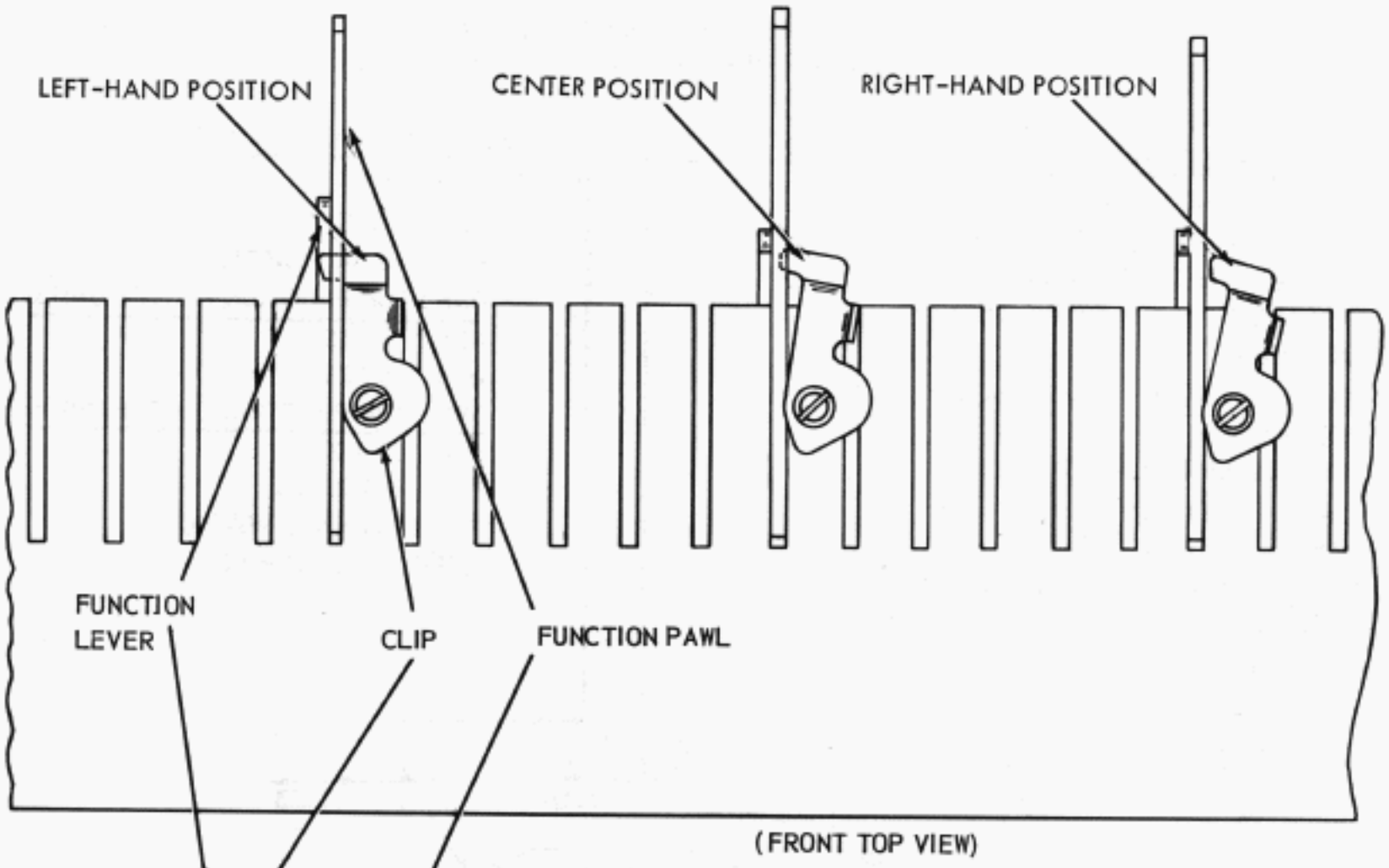

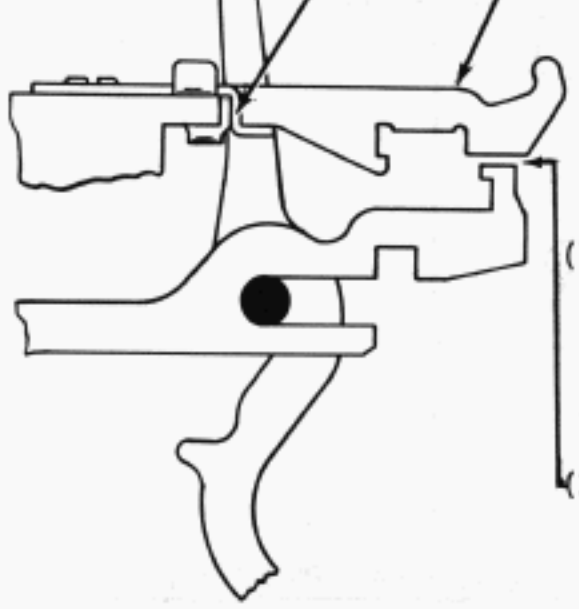

STUNT BOX CLIP (FOR UNITS EQUIPPED WITH CLIPS ONLY)

(1) REQUIREMENT (RIGHT-HAND POSITION)
THE CLIP SHOULD NOT PREVENT THE ASSOCIATED FUNCTION PAWL FROM ENGAGING ITS FUNCTION BAR.
TO ADJUST
POSITION THE CLIP TO ITS EXTREME RIGHT-HAND POSITION

(2) REQUIREMENT (CENTER POSITION)
THE CLIP SHOULD HOLD THE FUNCTION PAWL OUT OF ENGAGEMENT WITH ITS FUNCTION BAR BUT SHOULD NOT INTERFERE WITH THE FUNCTION LEVER.
TO ADJUST
POSITION THE CLIP WITH ITS MOUNTING SCREW LOOSENED.

(3) REQUIREMENT (LEFT-HAND POSITION)
THE CLIP SHOULD HOLD THE FUNCTION PAWL UPWARD OUT OF ENGAGEMENT WITH ITS FUNCTION BAR. IT SHOULD ALSO HOLD THE TOP END OF THE FUNCTION LEVER IN ITS REAR POSITION.
TO ADJUST
POSITION THE CLIP TO ITS EXTREME LEFT-HAND POSITION.

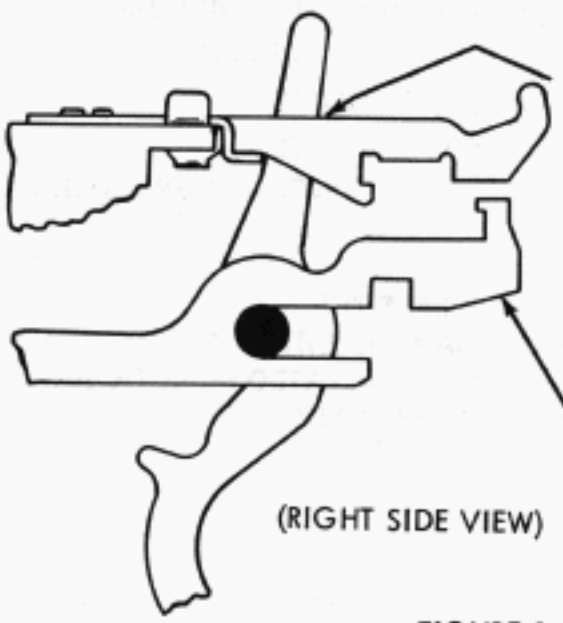

FIGURE 1-66. TYPING UNIT, STUNT BOX MECHANISM

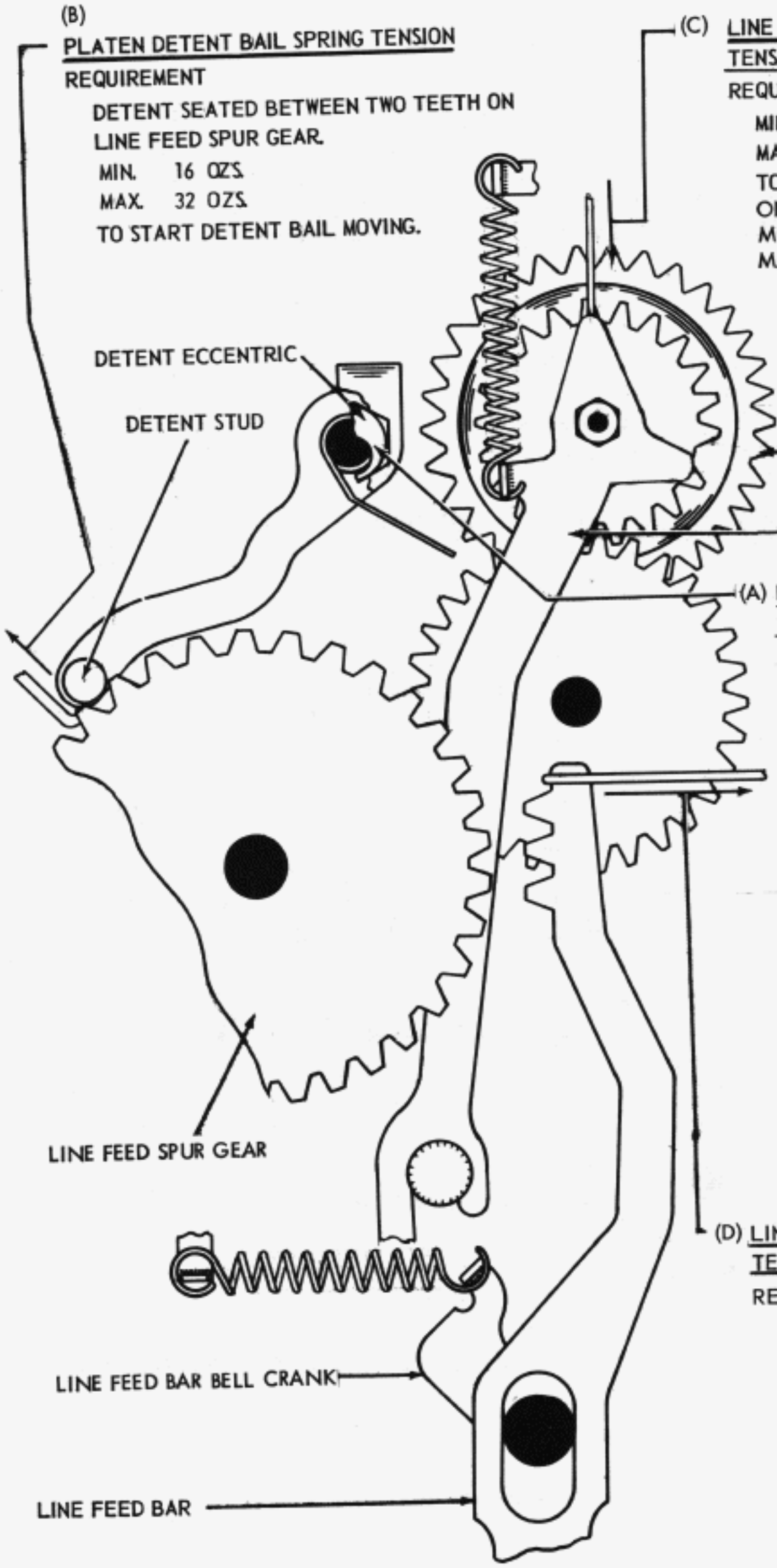

FIGURE 1-67. TYPING UNIT, LINE FEED MECHANISM, RIGHT SIDE

STRIPPER BLADE DRIVE CAM POSITION

REQUIREMENT

STRIPPER BLADE DRIVE CAM SHOULD MOVE EACH STRIPPER BLADE CAM ARM AN EQUAL DISTANCE ABOVE AND BELOW CENTER LINE OF ITS PIVOT (GAUGE BY EYE)

A. UPWARD DIRECTION

B. DOWNWARD DIRECTION

TO CHECK

WITH FUNCTION CLUTCH DISENGAGED OBSERVE ENGAGEMENT OF STRIPPER BLADE DRIVE CAM (UPPER PEAK) WITH STRIPPER BLADE CAM ARM. THEN ROTATE CLUTCH TO TURN CAM TO ITS EXTREME DOWNWARD POSITION AND OBSERVE ENGAGEMENT OF LOWER CAM PEAK.

TO ADJUST

WITH STRIPPER BLADE DRIVE ARM MOUNTING SCREWS LOOSENED, EQUALIZE THE OVERTRAVEL OF EACH CAM PEAK.

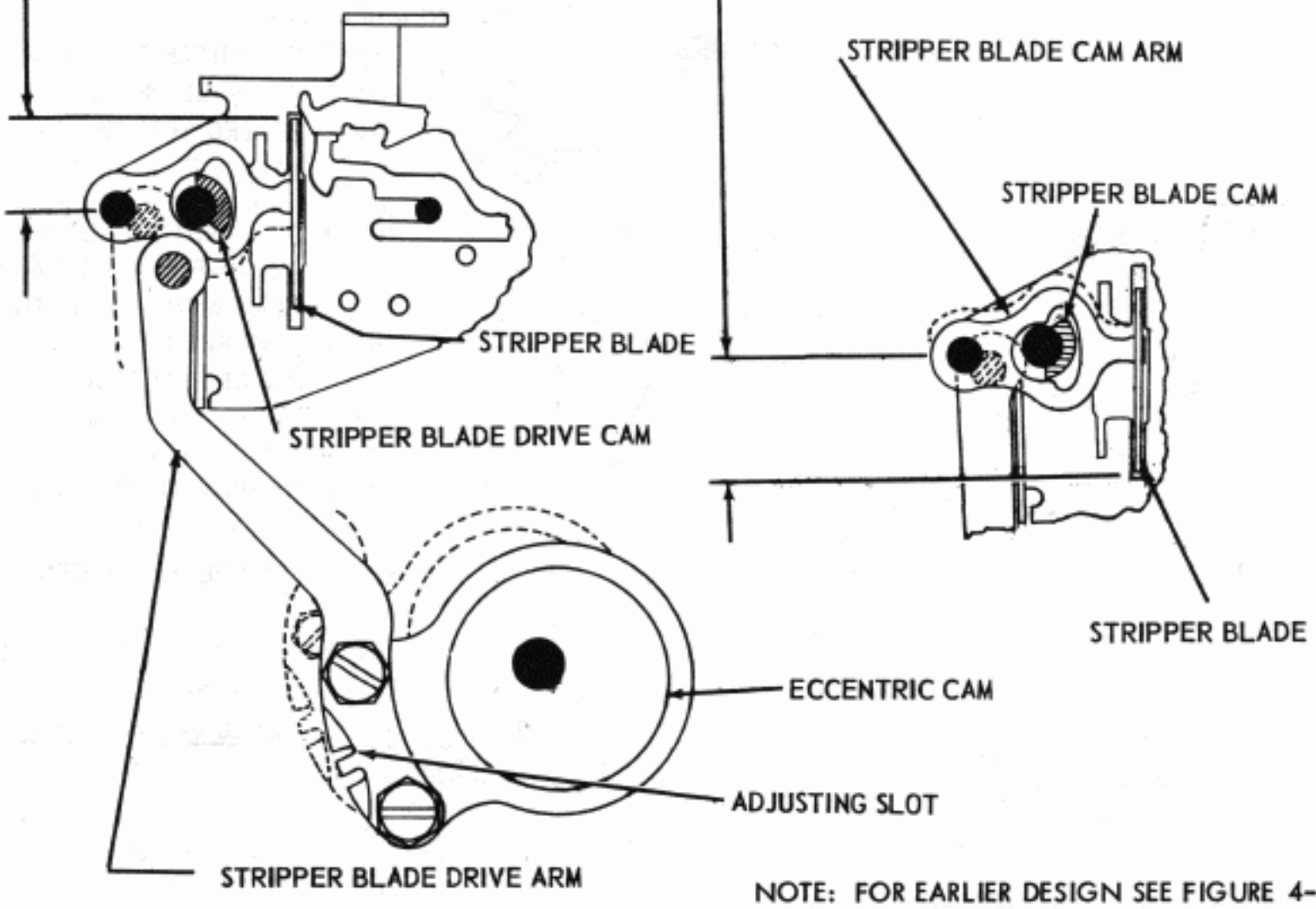

NOTE: FOR EARLIER DESIGN SEE FIGURE 4-37

FIGURE 1-68 TYPING UNIT, FUNCTION PAWL STRIPPER

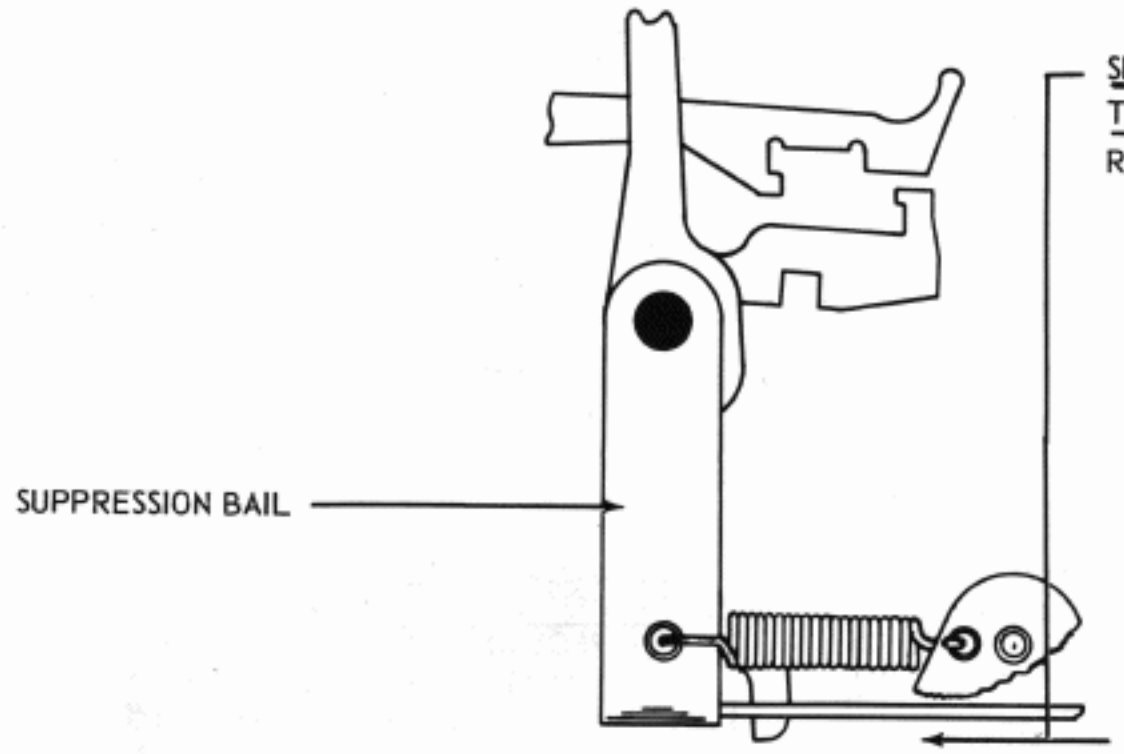

SPACING SUPPRESSION BAIL SPRING TENSION

REQUIREMENT

SPACING SUPPRESSION BAIL IN REAR POSITION. SCALE APPLIED NEAR CENTER OF HORIZONTAL PORTION OF BAIL.

MIN. 1/2 OZ.
MAX. 1 1/2 OZS.
TO START BAIL MOVING.

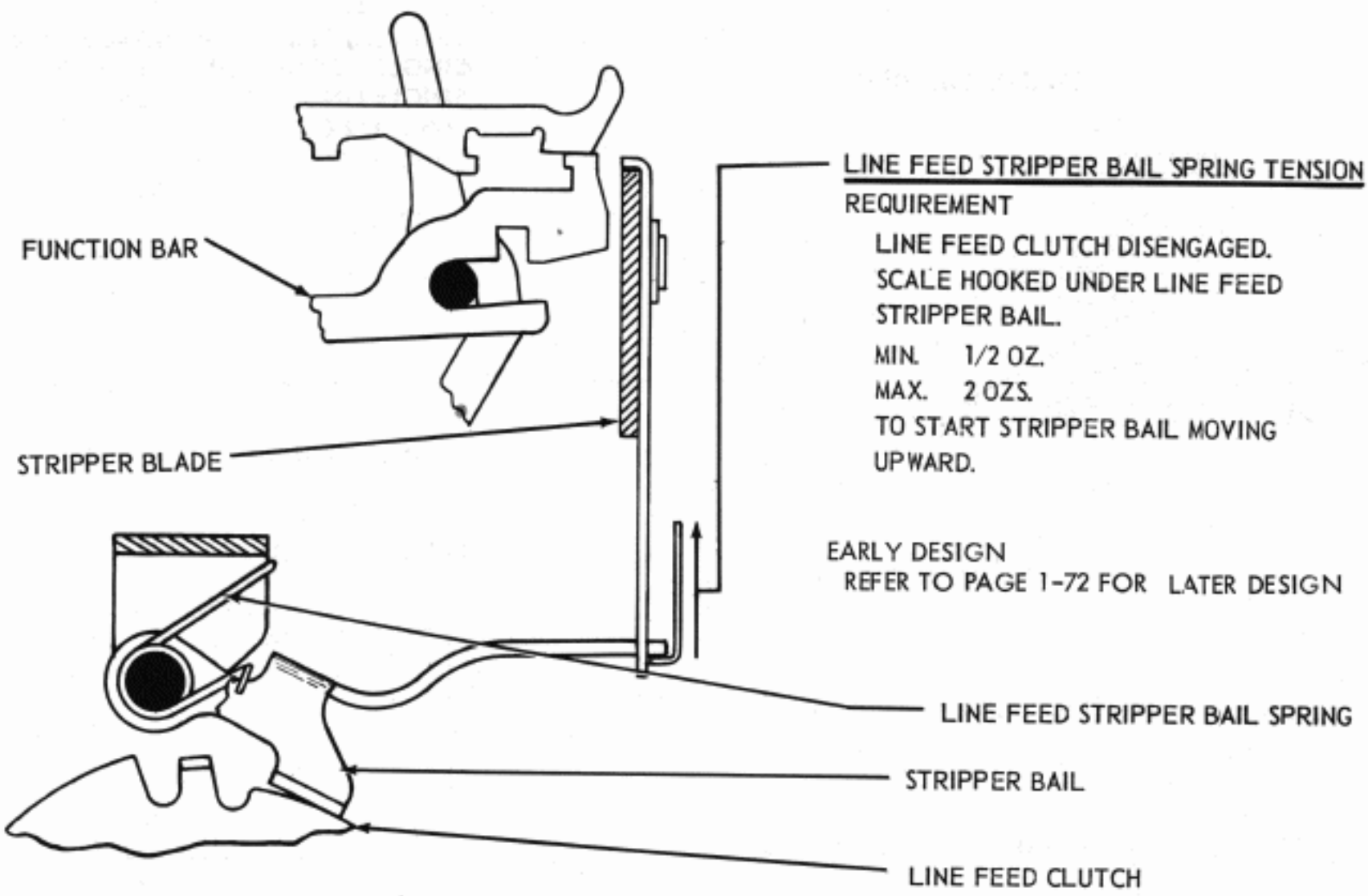

LINE FEED STRIPPER BAIL SPRING TENSION

REQUIREMENT

LINE FEED CLUTCH DISENGAGED. SCALE HOOKED UNDER LINE FEED STRIPPER BAIL.

MIN. 1/2 OZ.
MAX. 2 OZS.
TO START STRIPPER BAIL MOVING UPWARD.

EARLY DESIGN
REFER TO PAGE 1-72 FOR LATER DESIGN

FIGURE 1-69. TYPING UNIT, SPACING SUPPRESSION AND FUNCTION PAWL STRIPPER MECHANISMS

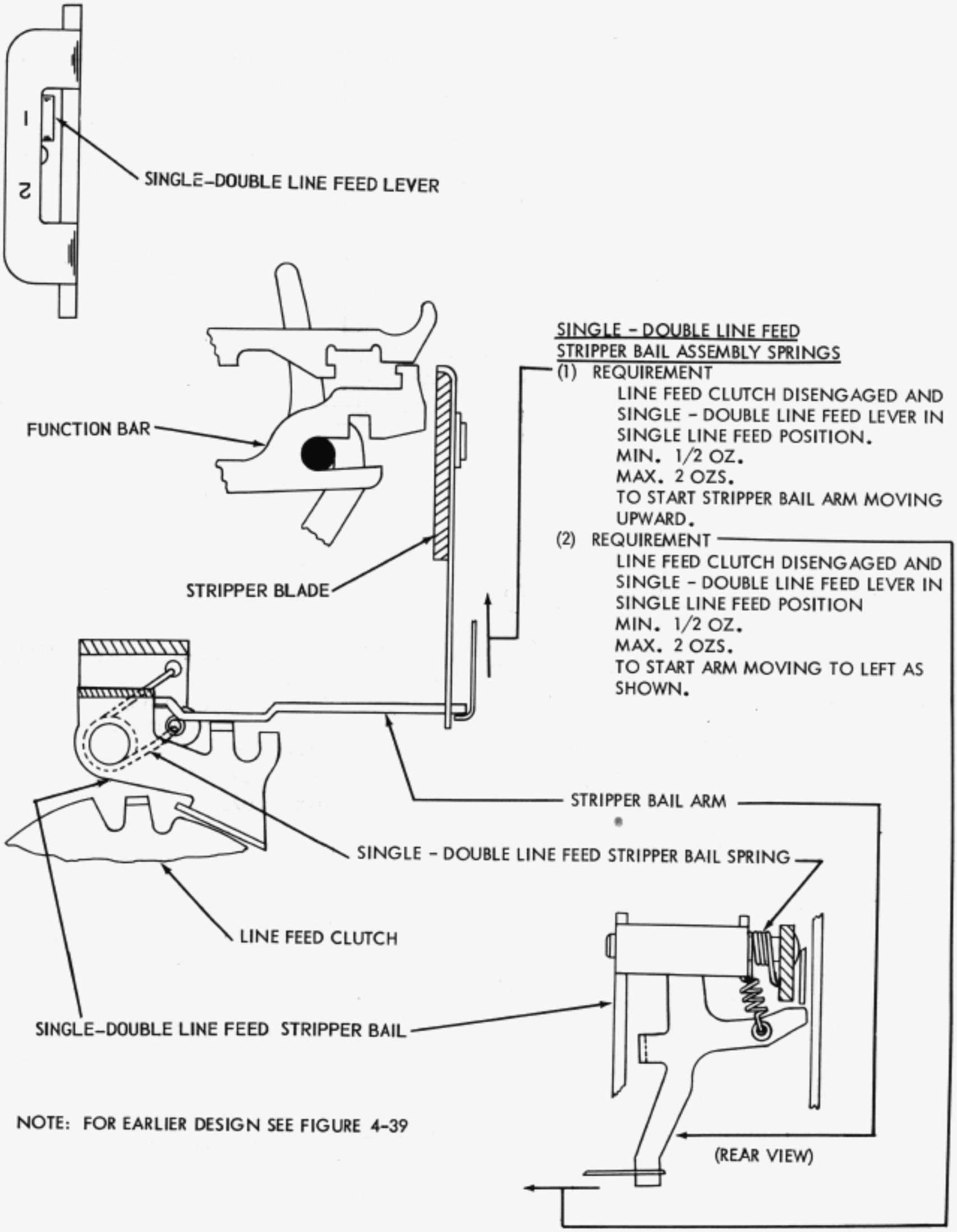

NOTE: FOR EARLIER DESIGN SEE FIGURE 4-39

FIGURE 1-70 TYPING UNIT, SINGLE–DOUBLE LINE FEED MECHANISM.

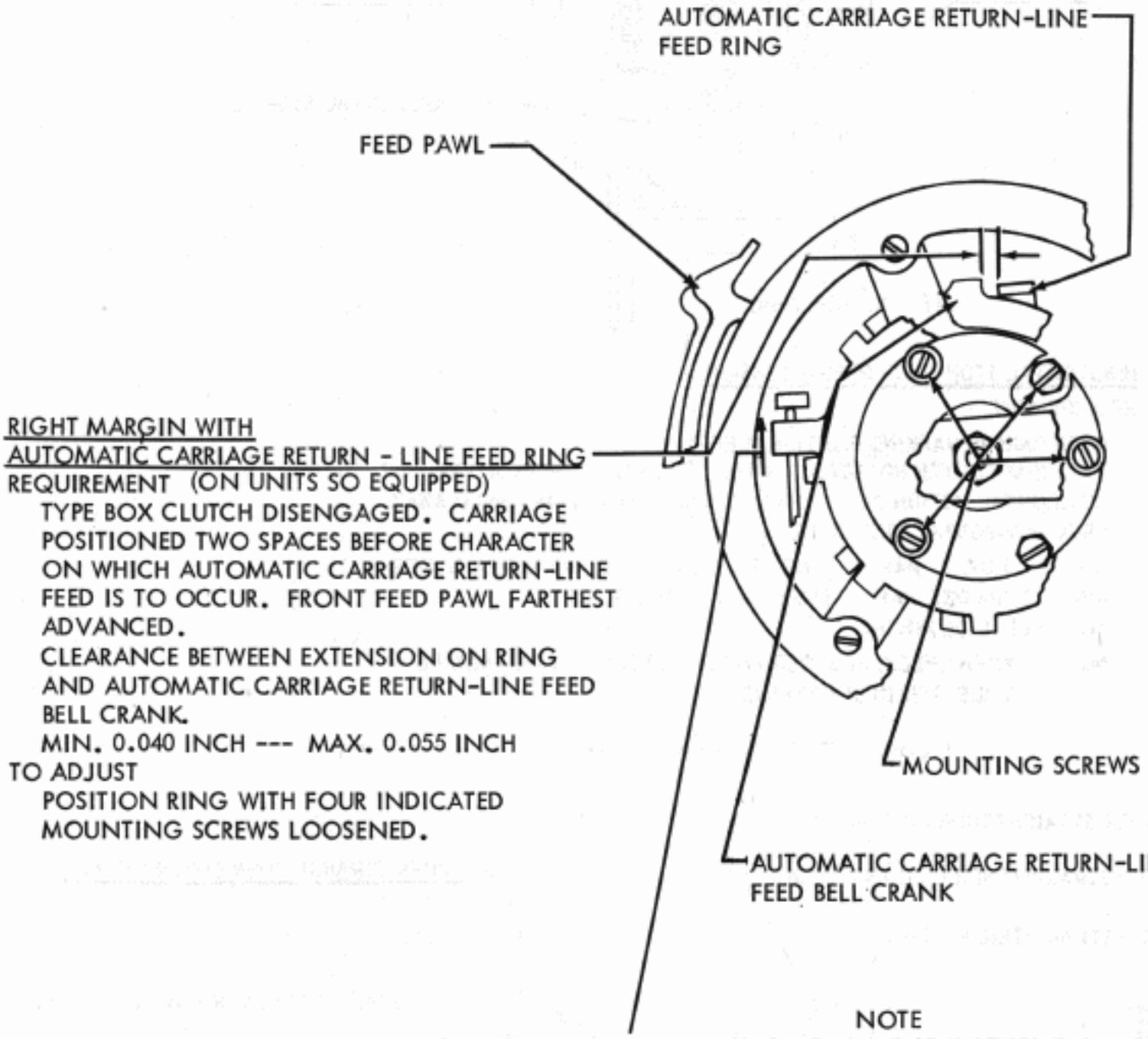

NOTE: FOR ADJUSTMENT ON EARLIER MODELS SEE FIGURE 4-38

FIGURE 1-71 TYPING UNIT, AUTOMATIC CARRIAGE RETURN-LINE FEED MECHANISM

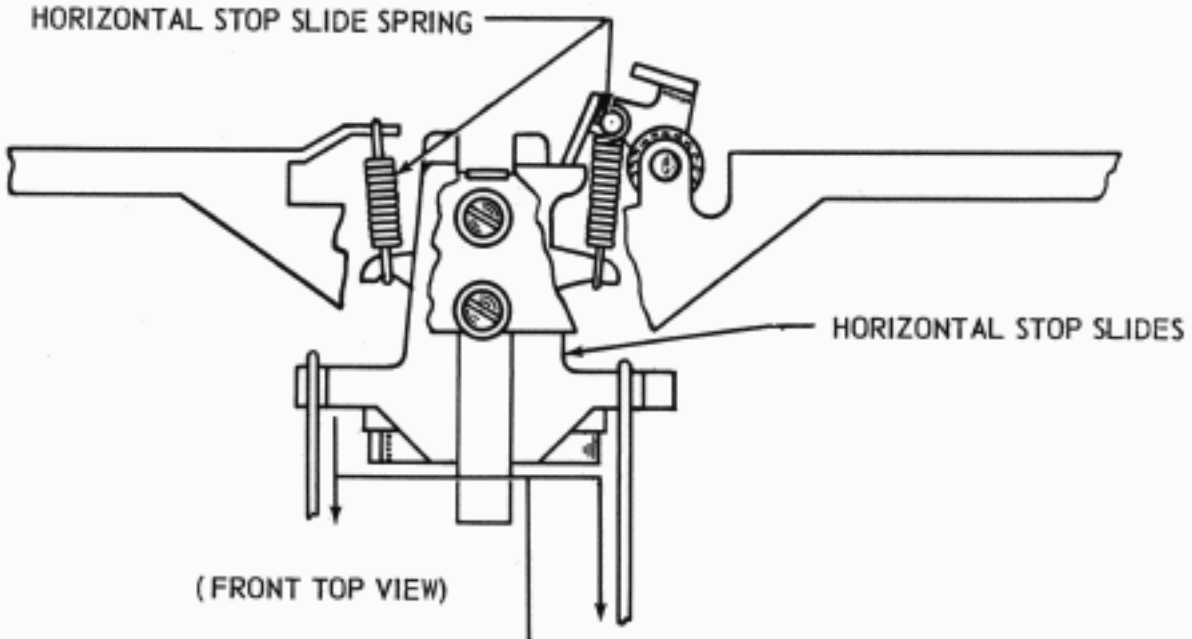

HORIZONTAL STOP SLIDE SPRING TENSION

REQUIREMENT

CODE BARS IN MARKING POSITION (LEFT)
TYPE BOX CLUTCH ROTATED 1/4 TURN FROM ITS STOP POSITION
HORIZONTAL MOTION DECELERATING SLIDES (FIG. 1-46) HELD AWAY FROM HORIZONTAL STOP SLIDES
MIN. 1/2 OZ. MAX. 1 1/2 OZS. FOR UPPER AND LOWER SLIDES
MIN. 1 3/4 OZS. MAX. 3 OZS. FOR MIDDLE SLIDE
TO START SLIDE MOVING.
NOTE: WHEN CHECKING UPPER AND LOWER SLIDES, HOLD MIDDLE SLIDE 1/32 INCH FORWARD.

FIGURE 1-72 TYPING UNIT, HORIZONTAL MOTION STOP

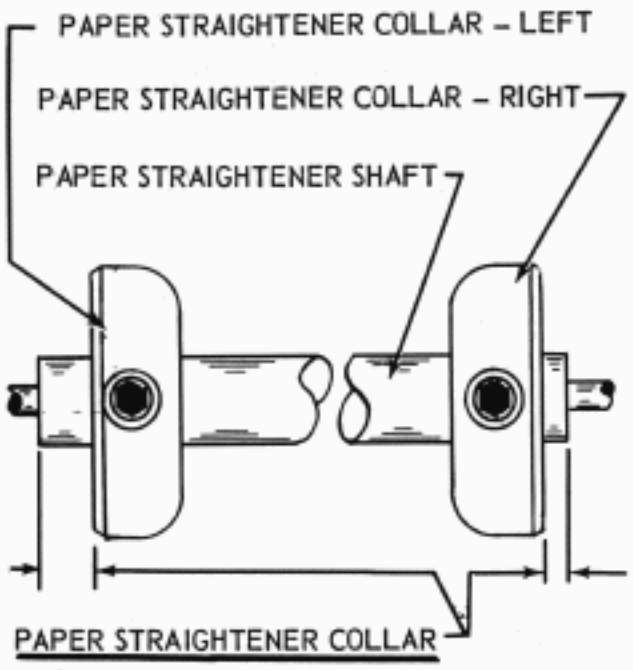

PAPER STRAIGHTENER COLLAR

REQUIREMENT

LEFT COLLAR SPACE
MIN. 9/32 INCH
MAX. 21/64 INCH
FROM THE LEFT SHOULDER ON THE PAPER STRAIGHTENER SHAFT.
RIGHT COLLAR SPACED.
MIN. 1/16 INCH
MAX. 5/64 INCH
FROM THE RIGHT SHOULDER.

TO ADJUST

POSITION COLLARS ON SHAFT WITH SET SCREWS LOOSENED

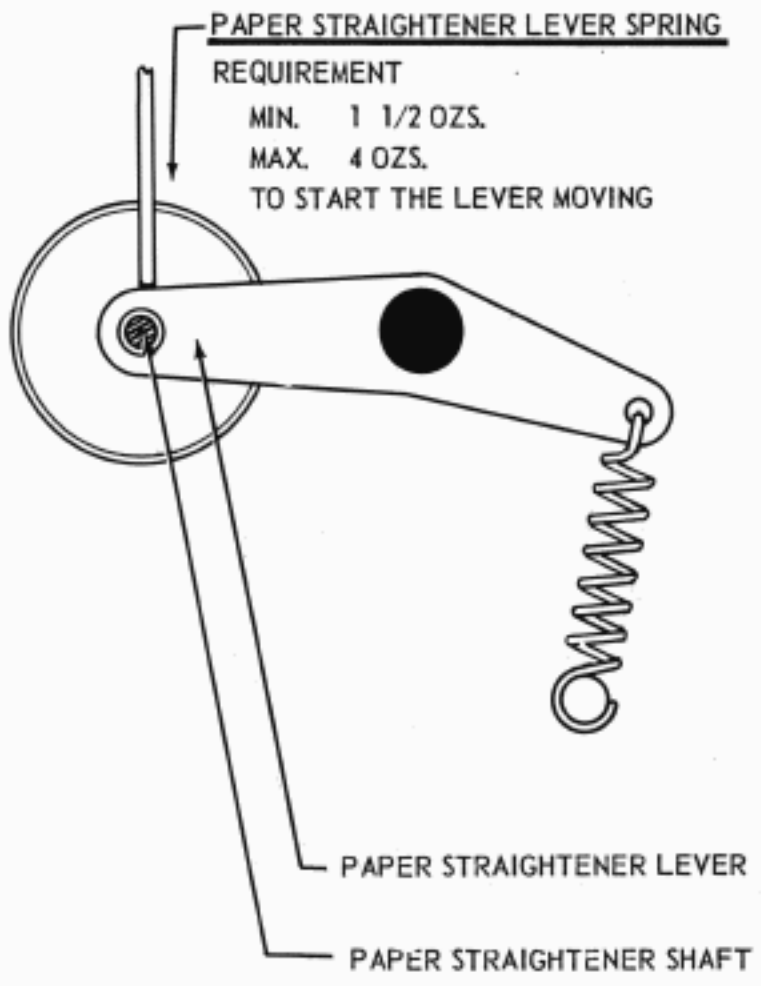

PAPER STRAIGHTENER LEVER SPRING

REQUIREMENT

MIN. 1 1/2 OZS.
MAX. 4 OZS.
TO START THE LEVER MOVING

NOTE: FOR SPROCKET FEED MECHANISM SEE SECTION 2

FIGURE 1-73 TYPING UNIT, PAPER MECHANISM

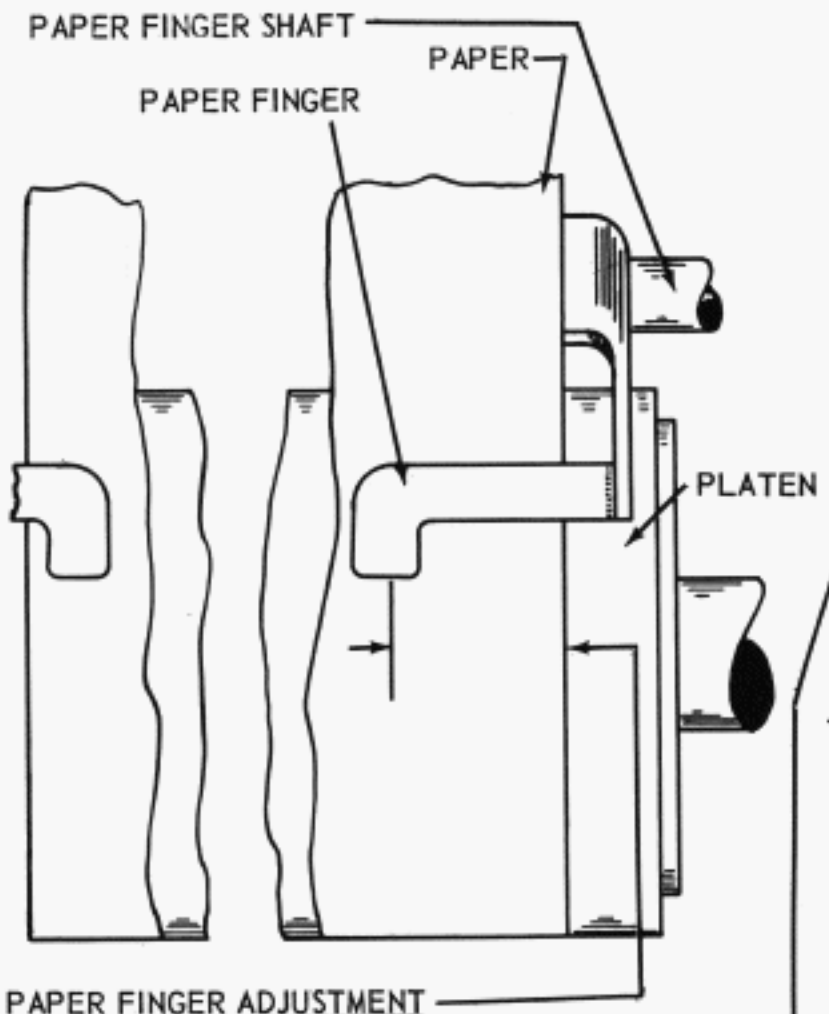

PAPER FINGER ADJUSTMENT

REQUIREMENT

THE PRESSURE END OF THE PAPER FINGERS SHOULD OVERLAP THE PAPER FROM 3/8 INCH TO 1/2 INCH.

TO ADJUST

POSITION THE PAPER FINGERS BY SLIDING THEM ON THEIR SHAFT.

PAPER FINGER SPRING TENSION

REQUIREMENT

PULL UPWARD ON RIGHT PAPER FINGER TO START LEFT PAPER FINGER MOVING FROM PLATEN.

MIN. 3 OZS.

MAX. 6 OZS.

NOTE: FOR SPROCKET FEED MECHANISM SEE SECTION 2

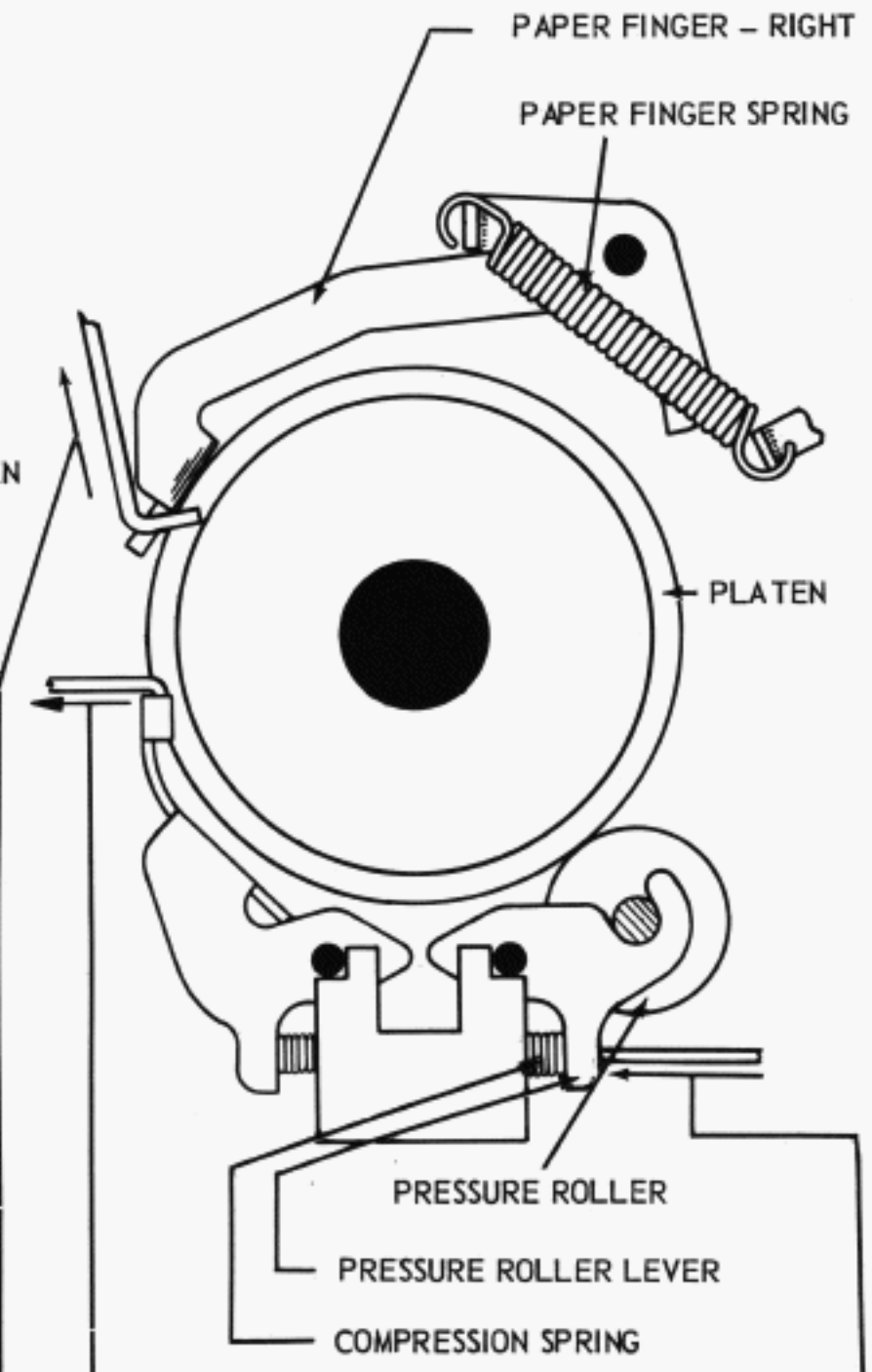

PRESSURE ROLLER LEVER SPRING

REQUIREMENT

MIN. 28 OZS.

MAX. 36 OZS.

TO START EACH CENTER LEVER MOVING. ALTERNATELY

PAPER PRESSURE BAIL SPRING TENSION

REQUIREMENT

SCALE HOOKED OVER PRESSURE BAIL AT EACH END OF PLATEN.

MIN. 7 OZS.

MAX. 20 OZS.

TO MOVE PRESSURE BAIL FROM PLATEN.

FIGURE 1-74. TYPING UNIT, PAPER MECHANISM

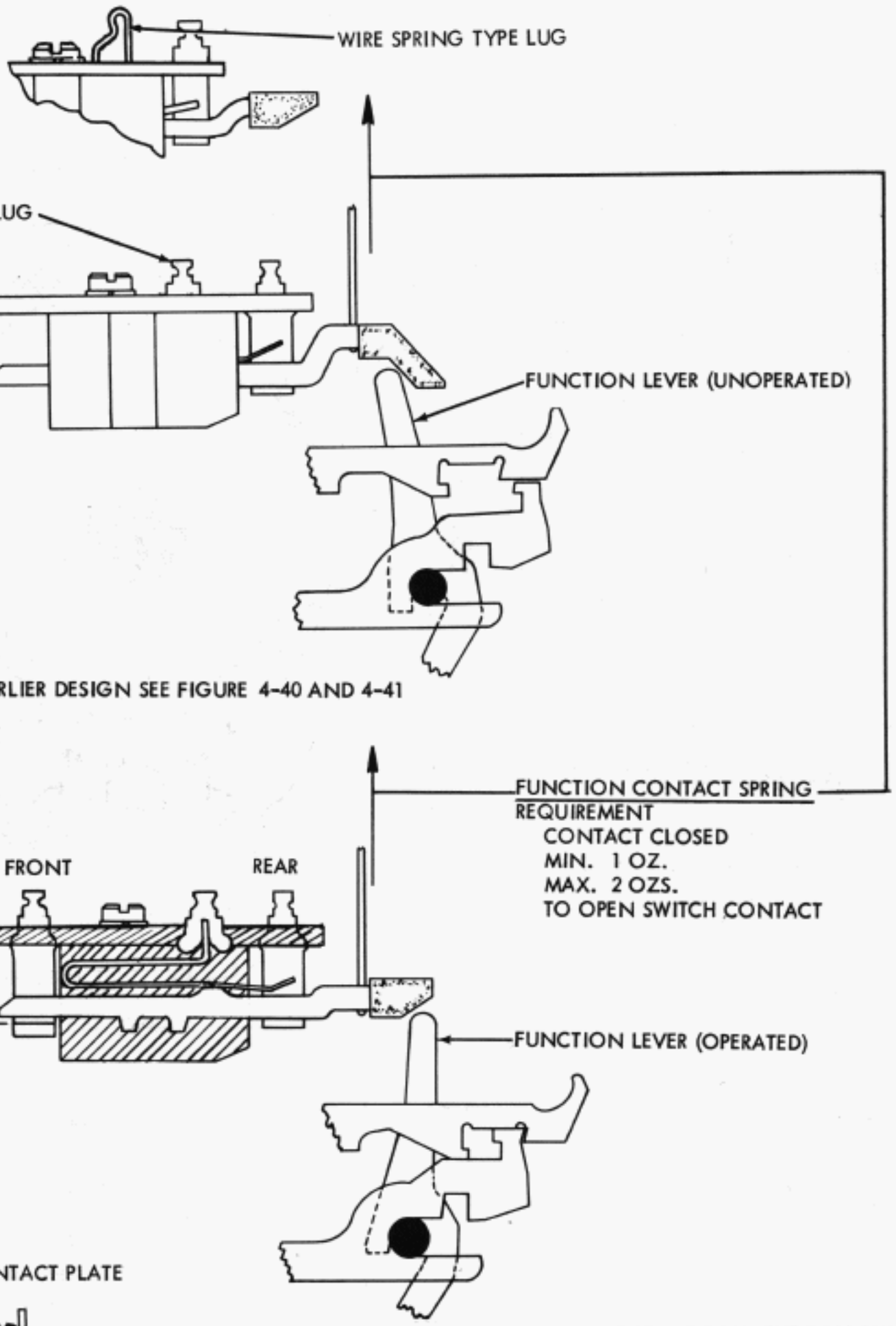

NOTE: FOR EARLIER DESIGN SEE FIGURE 4-40 AND 4-41

NOTE: IF THE SWITCHES ARE REMOVED FROM THE STUNT BOX, THE FOLLOWING REQUIREMENTS APPLY:

(1) PROVIDE AT LEAST .006 INCH CLEARANCE BETWEEN THE CONTACT ARM AND THE VERTICAL PORTION OF THE CONTACT CLIP. IF THE SWITCH HAS CONTACTS FRONT AND REAR, THIS CLEARANCE APPLIES TO BOTH FRONT AND REAR. TO OBTAIN THIS CLEARANCE, POSITION THE CONTACT PLATE BEFORE TIGHTENING THE CONTACT PLATE SCREWS.

(2) ON SWITCHES WITH CONTACTS FRONT AND REAR, CHECK TO SEE THAT THERE IS A GAP OF NOT LESS THAN .008 INCH BETWEEN THE FORMED-OVER END OF THE FRONT CONTACT CLIP AND THE BOTTOM OF THE CONTACT ARM WHEN THE REAR CONTACT IS CLOSED.

FIGURE 1-75. TYPING UNIT, FUNCTION CONTACTS

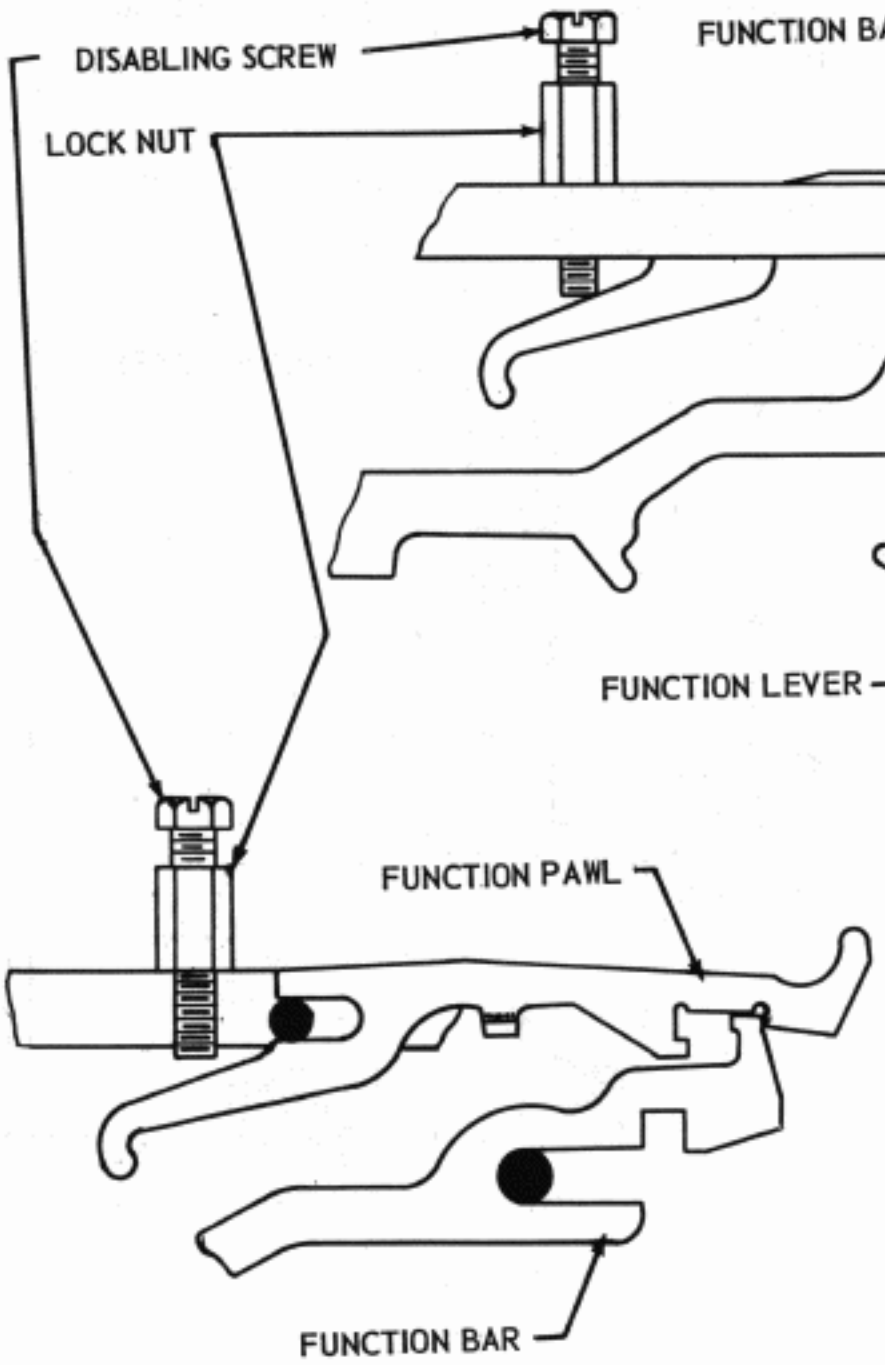

UNSHIFT-ON-SPACE FUNCTION PAWL

(1) REQUIREMENT

TO PREVENT UNSHIFT-ON-SPACE FUNCTION, PROVIDE CLEARANCE BETWEEN THE LOWER EDGE OF THE UNSHIFT-ON-SPACE FUNCTION PAWL AND ITS FUNCTION BAR.

MIN. 0.015 INCH
MAX. 0.060 INCH

TO ADJUST

LOOSEN THE LOCK NUT AND TURN THE DISABLING SCREW IN.

(2) REQUIREMENT

TO RESTORE THE UNSHIFT-ON-SPACE FUNCTION, BACK OFF THE SCREW SO THAT PAWL FULLY ENGAGES THE FUNCTION BAR. THEN CONTINUE TO TURN THE SCREW OUT ONE TO THREE TURNS.

FIGURE 1-76. TYPING UNIT, UNSHIFT-ON-SPACE MECHANISM, LEFT VIEW

CODE BAR DETENT

REQUIREMENT

FRONT PLATE REMOVED. ALL CLUTCHES DISENGAGED. SUPPRESSION AND SHIFT CODE BARS SHOULD DETENT EQUALLY (GAUGED BY EYE)

TO ADJUST

EQUALIZE THE DETENTING OF THE CODE BARS BY ADDING OR REMOVING SHIMS BETWEEN THE CASTING AND THE CODE BAR BRACKET.

CODE BAR DETENT SPRING TENSION

NOTE

UNLESS THERE IS REASON TO BELIEVE THAT THESE SPRINGS ARE CAUSING OPERATING FAILURE DO NOT CHECK THIS REQUIREMENT.

REQUIREMENT

CODE BAR DETENT BRACKET CAREFULLY REMOVED AND CODE BARS REMOVED FROM DETENT BRACKET. SCALE APPLIED TO DETENT BALL AND PULLED IN DIRECTION OF BALL TRAVEL

MIN. 1 1/2 OZS.
MAX. 3 1/2 OZS.

TO START BALL MOVING AGAINST COMPRESSION OF SPRING. CHECK EACH BALL

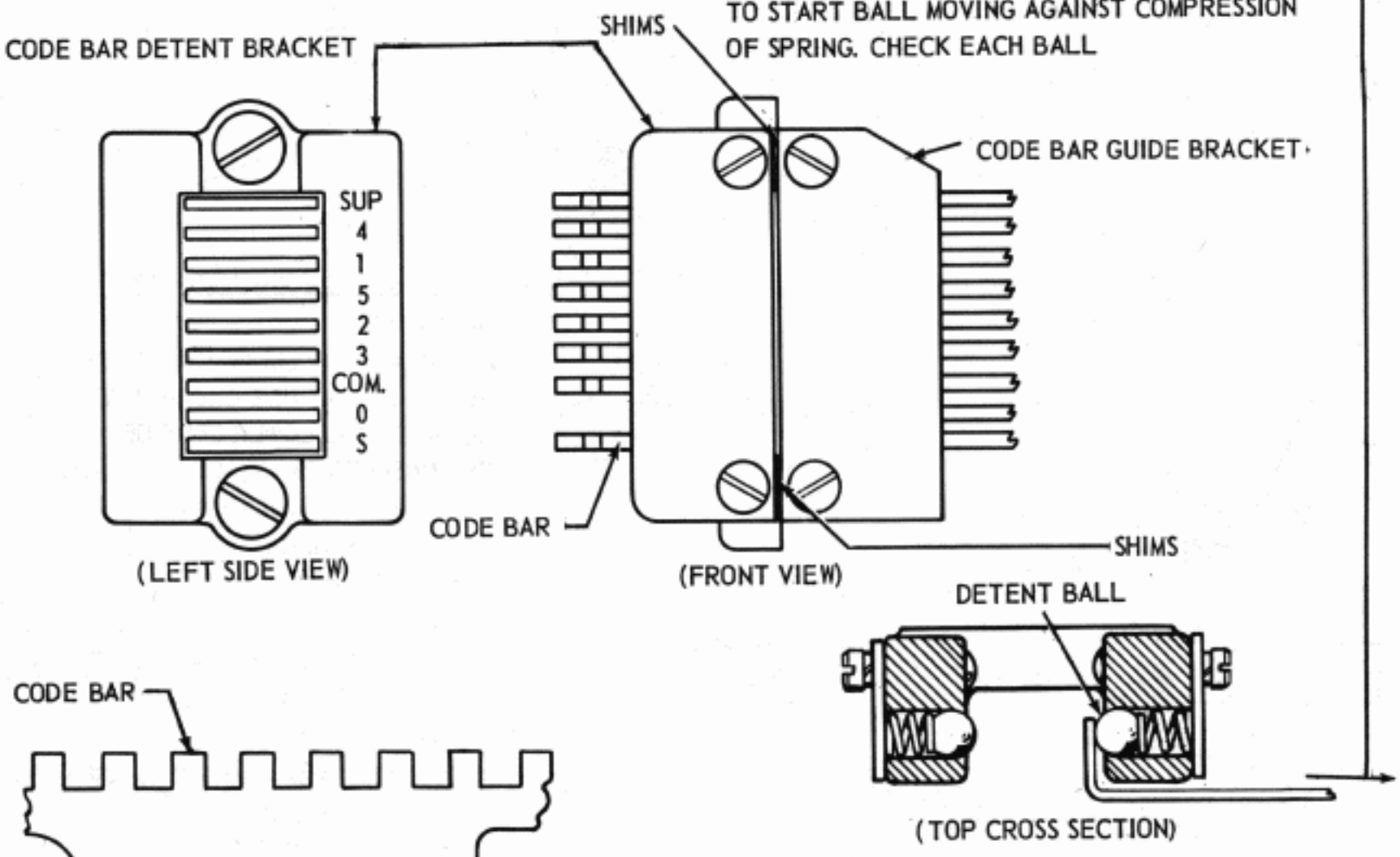

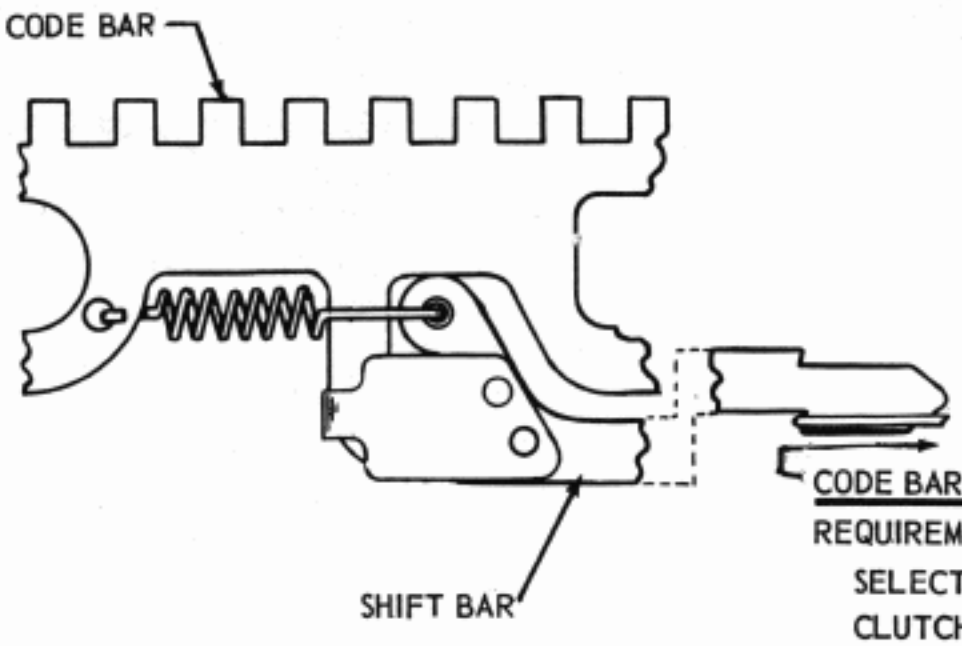

CODE BAR YIELD SPRING (IF SO EQUIPPED)

REQUIREMENT

SELECTOR CLUTCH, CODE BAR CLUTCH, AND TYPE BOX CLUTCH DISENGAGED. NO. 1 CODE BAR IN SPACING POSITION

MIN. 14 OZS.
MAX. 23 OZS.

TO START CODE BAR SHIFT BAR PIVOT MOVING AWAY FROM CODE BAR. CHECK NO. 2 AND COMMON CODE BAR SHIFT BAR IN THE SAME MANNER.

FIGURE 1-77 TYPING UNIT, CODE BAR DETENT MECHANISM

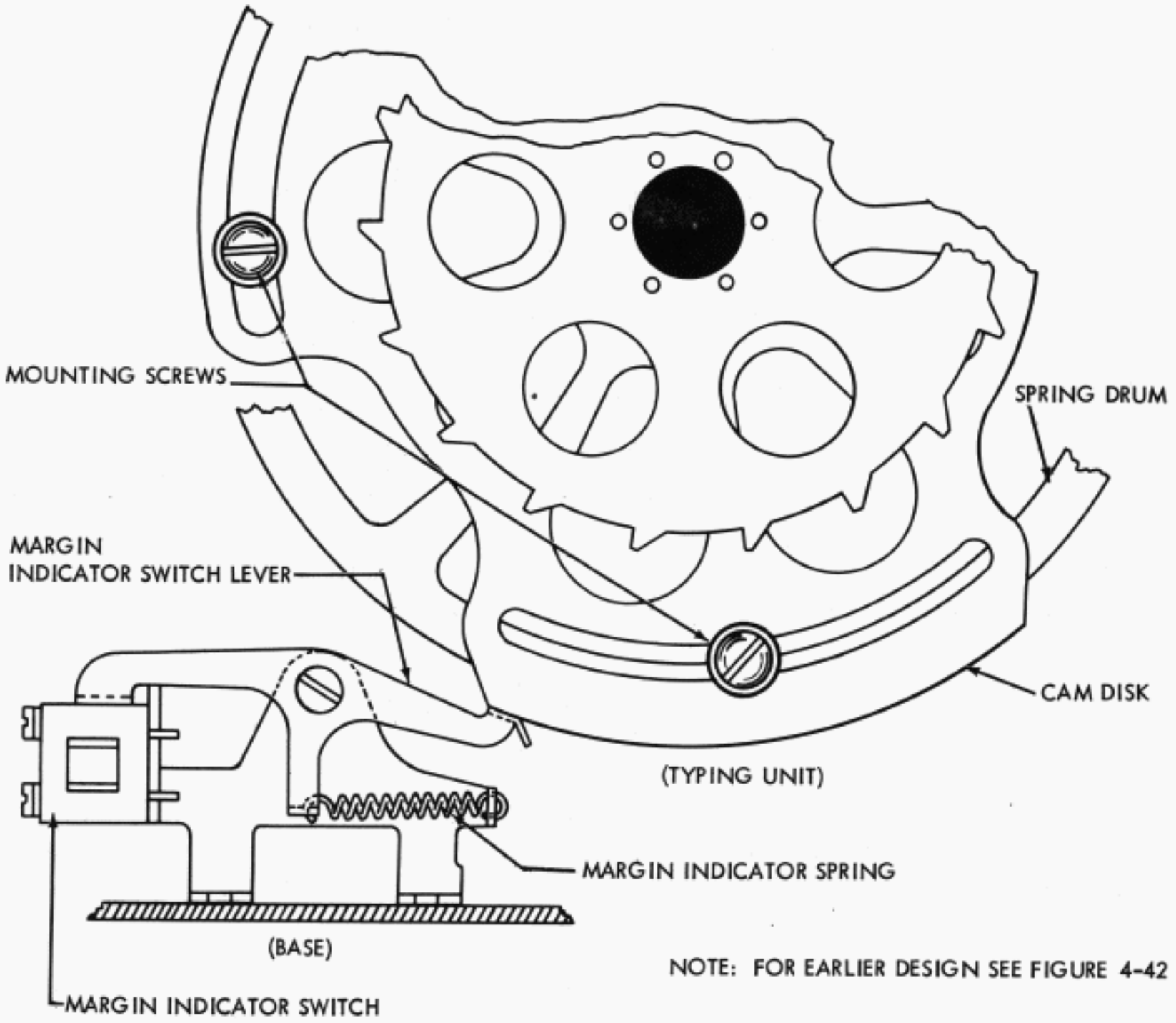

NOTE: FOR EARLIER DESIGN SEE FIGURE 4-42

MARGIN INDICATOR LAMP

REQUIREMENT

OPERATING UNDER POWER, THE LAMP SHOULD LIGHT ON THE DESIRED CHARACTER.

TO ADJUST

SET THE TYPE BOX CARRIAGE TO PRINT THE DESIRED CHARACTER AND POSITION THE CAM DISK COUNTERCLOCKWISE ON THE SPRING DRUM WITH ITS THREE MOUNTING SCREWS LOOSENED SO THAT THE SWITCH JUST OPENS. IF A LINE SHORTER THAN 72 CHARACTERS IS REQUIRED, IT MAY BE NECESSARY TO REMOVE THE CAM DISK SCREWS AND INSERT THEM IN ADJACENT SLOTS IN THE DISK, IF THE RANGE OF ROTATION IN ONE SLOT IS NOT ENOUGH.

FIGURE 1-78 BASE AND TYPING UNIT, MARGIN INDICATING MECHANISM

5. MOTORS

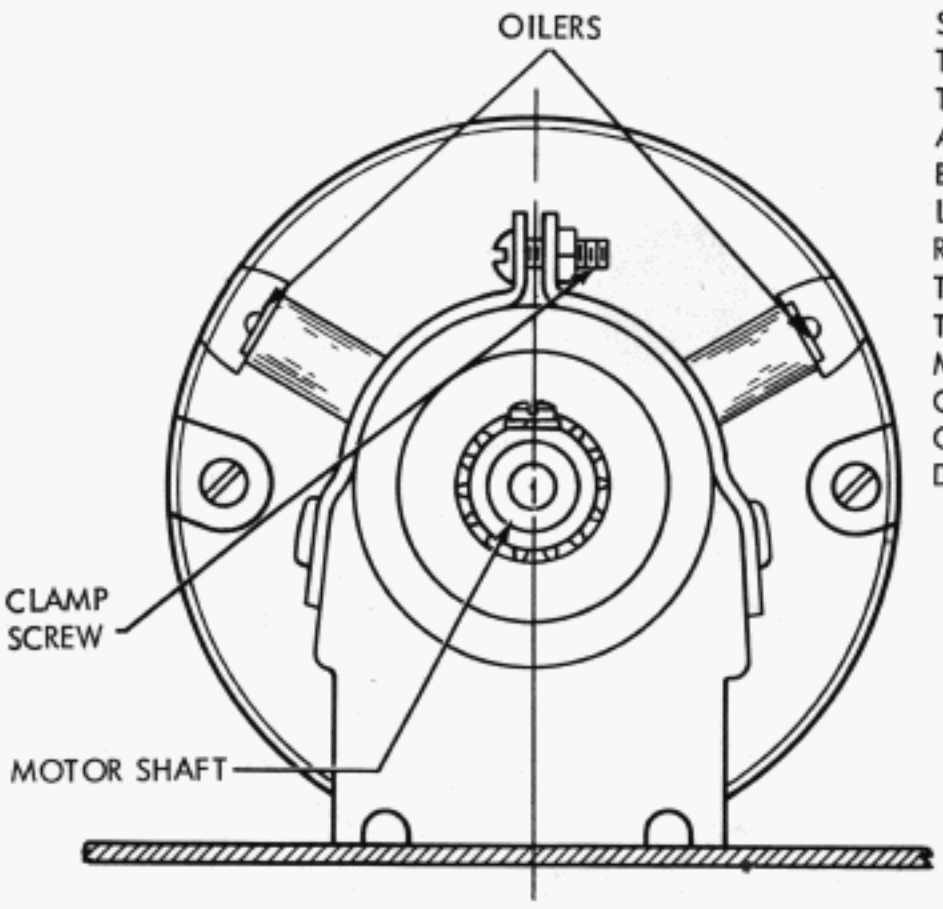

CAUTION

SHOULD AN OVERLOAD CONDITION DEVELOP, THE THERMAL CUT-OUT SWITCH DE-ENERGIZES THE MOTOR UNIT. CORRECT THE FAULT AND ALLOW AT LEAST FIVE MINUTES TO ELAPSE BEFORE ATTEMPTING TO RESET THE OVER-LOAD PROTECTION DEVICE (DEPRESSING RED BUTTON). AMPLE TIME IS NEEDED FOR THE BI-METALLIC DISK TO RETRACT SUFFICIENTLY TO PERMIT THE CONTACTS TO BE CLOSED MANUALLY. FREQUENT RESETTING OF THE CUT-OUT SWITCH ON ACCOUNT OF AN OVERLOAD CONDITION WILL DAMAGE THE DISKS OR MOTOR UNIT .

SYNCHRONOUS MOTOR POSITIONING

REQUIREMENT

TWO OILERS SHOULD BE UPWARD AND APPROXIMATELY EQUIDISTANT FROM A VERTICAL LINE THROUGH THE MOTOR SHAFT.

TO ADJUST

POSITION THE MOTOR WITH THE TWO CLAMP SCREWS LOOSENED.

FIGURE 1-79. SYNCHRONOUS MOTOR

GOVERNED MOTOR POSITIONING

REQUIREMENT

MOTOR SHOULD BE CENTRALLY POSITIONED IN ITS RUBBER MOUNTS TO PROVIDE AT LEAST 0.020 INCH CLEARANCE BETWEEN THE MOTOR HOUSING AND THE CRADLE AT THE GOVERNOR END. THE CABLE SHOULD ALSO CLEAR THE GROMMET IN THE SCREEN BY AT LEAST 0.030 INCH.

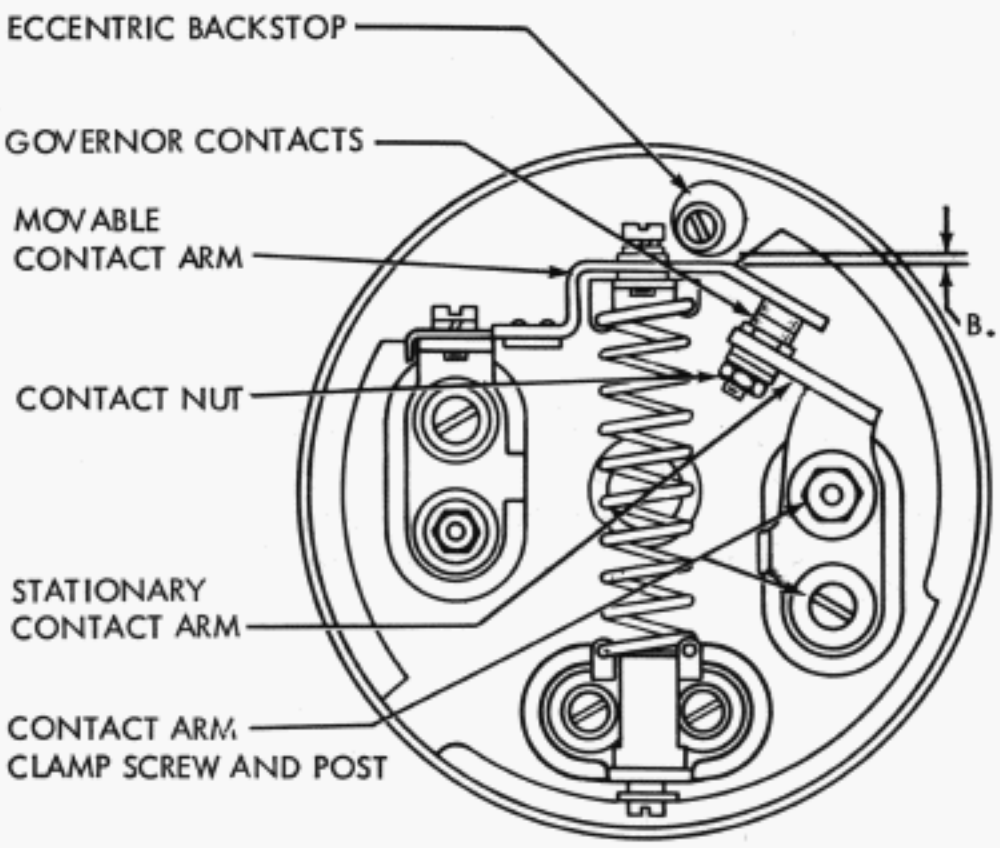

A. GOVERNOR CONTACT

REQUIREMENT

THE CONTACTS SHOULD MEET SQUARELY AND NOT OVERLAP MORE THAN 0.010 INCH.

TO ADJUST

POSITION THE STATIONARY CONTACT AND CONTACT ARM WITH THE CLAMP SCREW AND POST LOOSENED.

B. GOVERNOR CONTACT BACKSTOP

REQUIREMENT

CLEARANCE BETWEEN THE MOVABLE CONTACT ARM AND ITS ECCENTRIC BACKSTOP:

MIN. 0.020 INCH --- MAX. 0.040 INCH

TO ADJUST

ROTATE THE ECCENTRIC BACKSTOP WITH CLAMPING SCREW LOOSENED.

FIGURE 1-80. GOVERNED MOTOR

NOTE
REPLACE GOVERNOR BRUSHES THAT HAVE WORN TO A LENGTH OF APPROXIMATELY 15/32 INCH (2/3 OF ORIGINAL LENGTH).

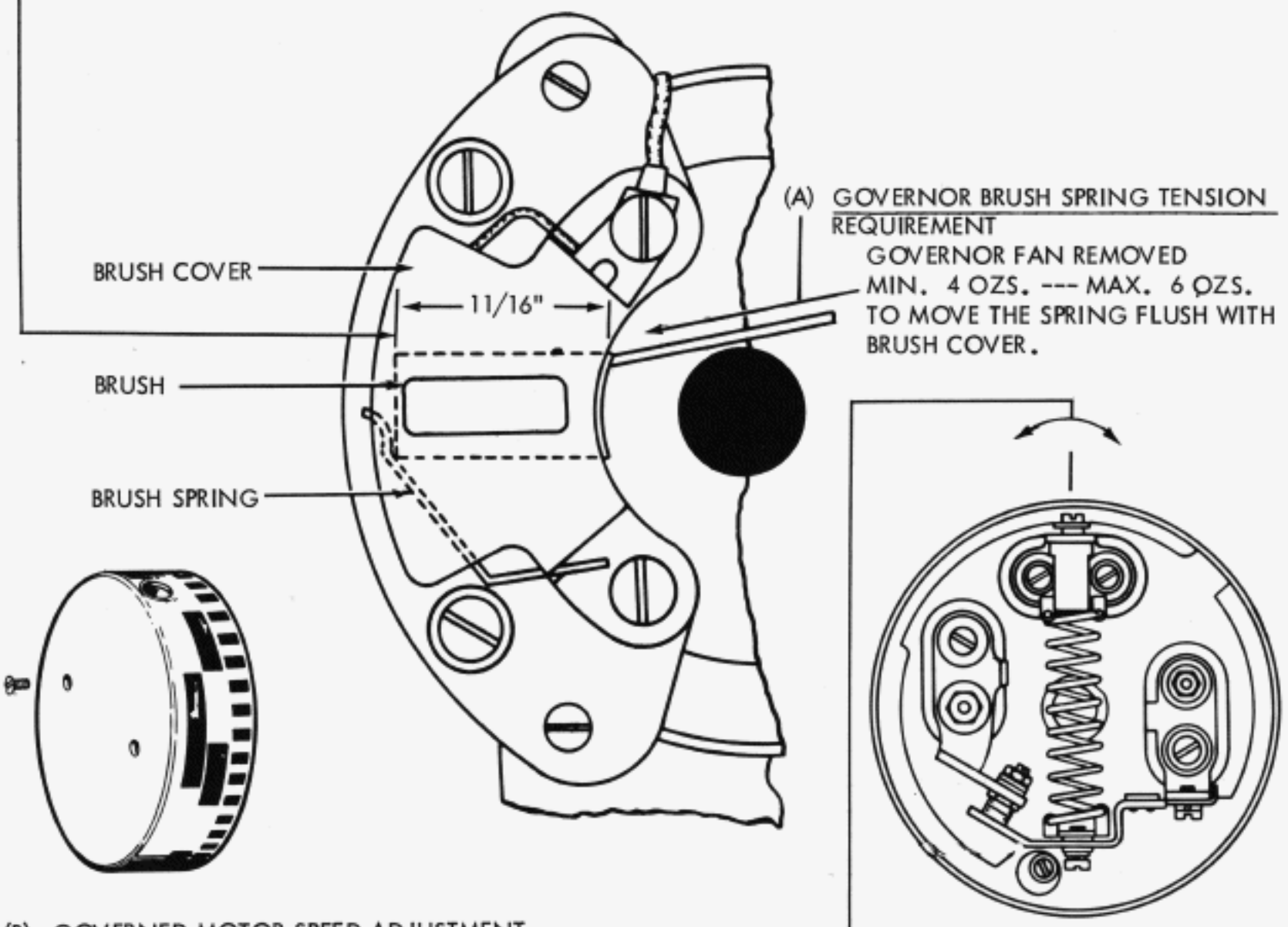

(A) GOVERNOR BRUSH SPRING TENSION
REQUIREMENT
GOVERNOR FAN REMOVED
MIN. 4 OZS. --- MAX. 6 OZS.
TO MOVE THE SPRING FLUSH WITH BRUSH COVER.

(B) GOVERNED MOTOR SPEED ADJUSTMENT
REQUIREMENT
WITH THE TARGETS ILLUMINATED AND VIEWED THROUGH THE SHUTTERS OF A 120 VPS TUNING FORK, THE 4 SPOT TARGET SHOULD APPEAR STATIONARY WHILE THE MOTOR IS ROTATING.
TO ADJUST
STOP THE MOTOR AND TURN THE ADJUSTING SCREW AS INDICATED ON THE GOVERNOR COVER.

NOTE
IT IS POSSIBLE TO ADJUST THE MOTOR TO SOME MULTIPLE OF THE CORRECT SPEED. TO CHECK FOR CORRECT SPEED, RETURN THE TYPE BOX CARRIAGE TO THE LEFT MARGIN, SET UP ANY CHARACTER ON THE SELECTOR AND MANUALLY TRIP THE TYPE BOX CLUTCH TRIP LEVER. IF THE UNIT IS EQUIPPED WITH GEARS FOR 60 WPM OPERATION, IT SHOULD PRINT 70 CHARACTERS IN 10 SECONDS. WITH 75 WPM GEARS, IT SHOULD PRINT 44 CHARACTERS IN 5 SECONDS, AND WITH 100 WPM GEARS, 57 CHARACTERS IN 5 SECONDS.

FIGURE 1-81. MOTOR GOVERNOR BRUSH AND MOTOR SPEED

6. CABINET

(A)

ARMATURE SPRING TENSION

REQUIREMENT

MIN. 1/2 OZ.
MAX. 1 OZ.

TO PUSH THE ARMATURE AGAINST THE CORE (VERTICALLY)

(B)

REMOTE SIGNAL BELL

REQUIREMENT

ARMATURE HELD AGAINST THE MAGNET CORE.
CLEARANCE BETWEEN THE ARMATURE BALL AND THE BELL.

MIN. 0.020 INCH
MAX. 0.035 INCH

TO ADJUST

BEND THE ARMATURE EXTENSION JUST BELOW THE ARMATURE SPRING.

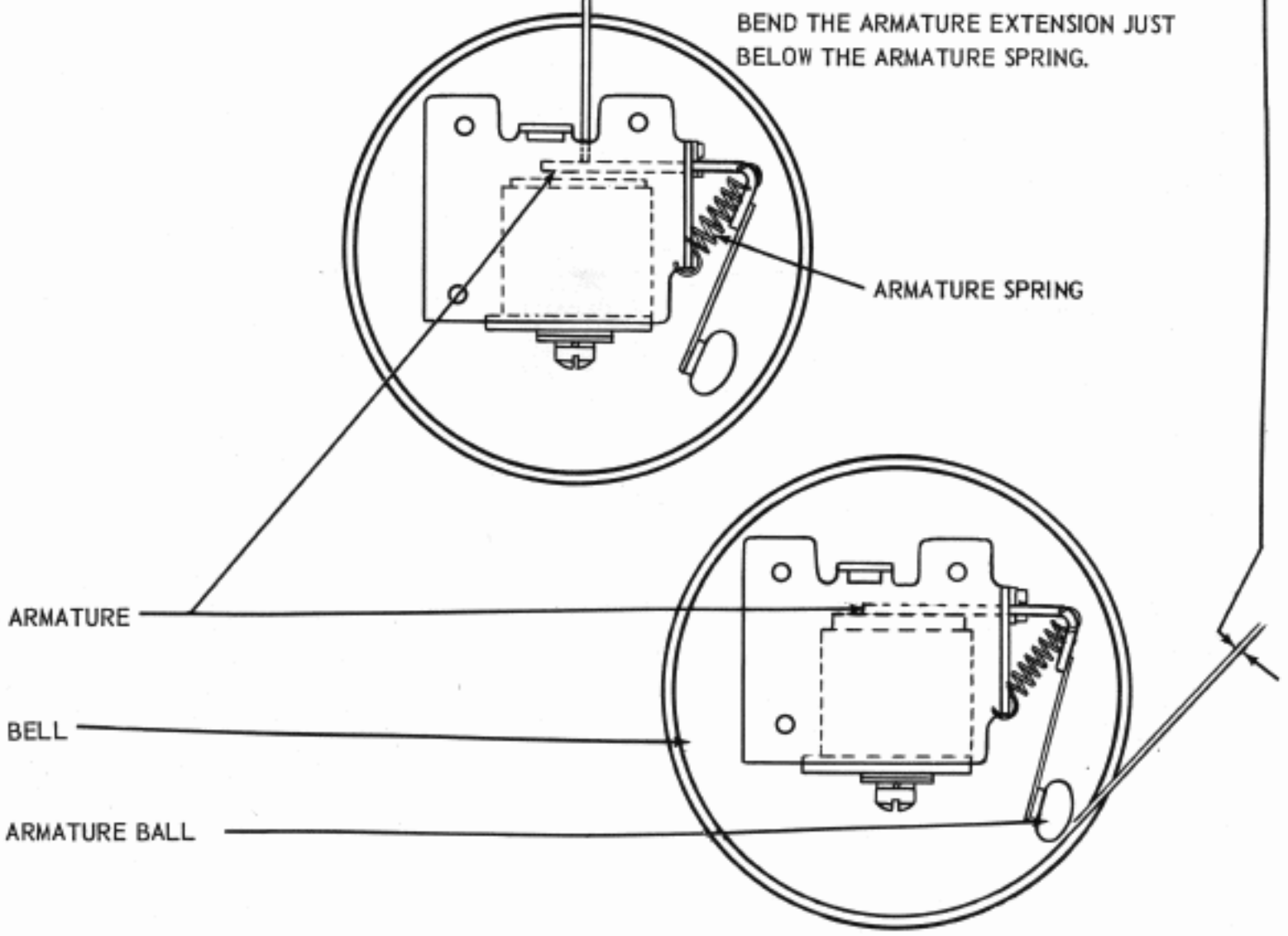

(C)

CRADLE

REQUIREMENT

TOP OF HINGE BRACKET PARALLEL TO TOP OF HINGE BAR.

TO ADJUST

TURN STOP SCREW WITH LOCK NUT LOOSENED.

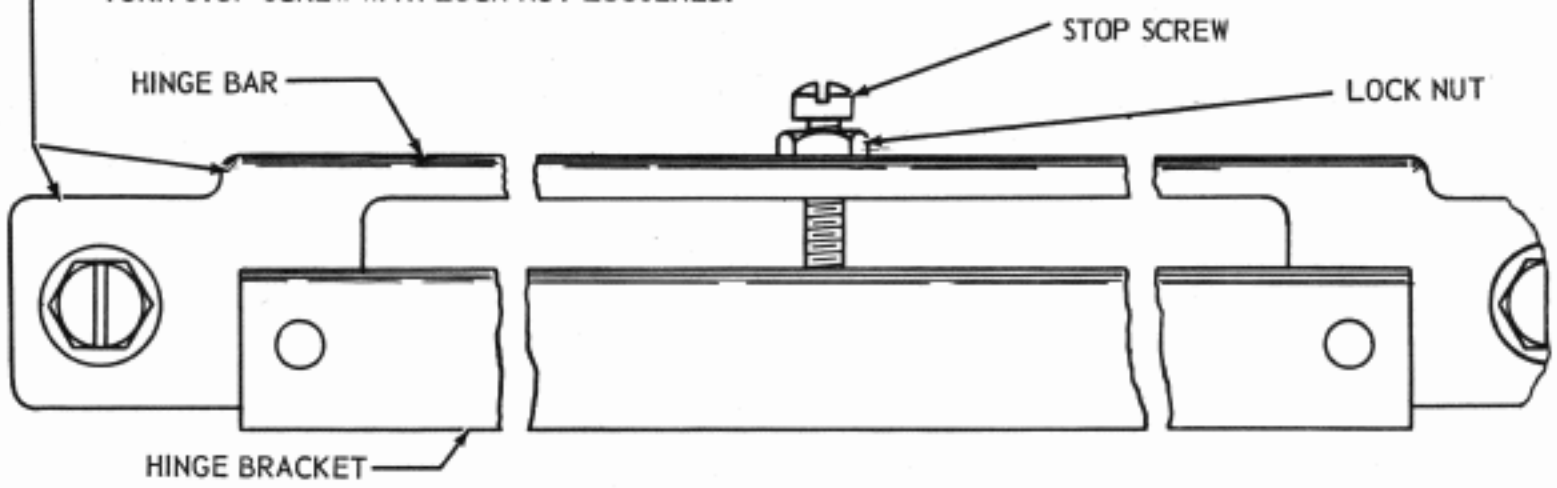

FIGURE 1-82 REMOTE SIGNAL BELL AND CRADLE

NOTE: THE FOLLOWING ADJUSTMENTS ARE MADE AT THE FACTORY AND SHOULD NOT BE DISTURBED UNLESS THERE IS REASON TO BELIEVE THAT THE PARTS ARE OUT OF ADJUSTMENT OR HAVE BEEN DISASSEMBLED.

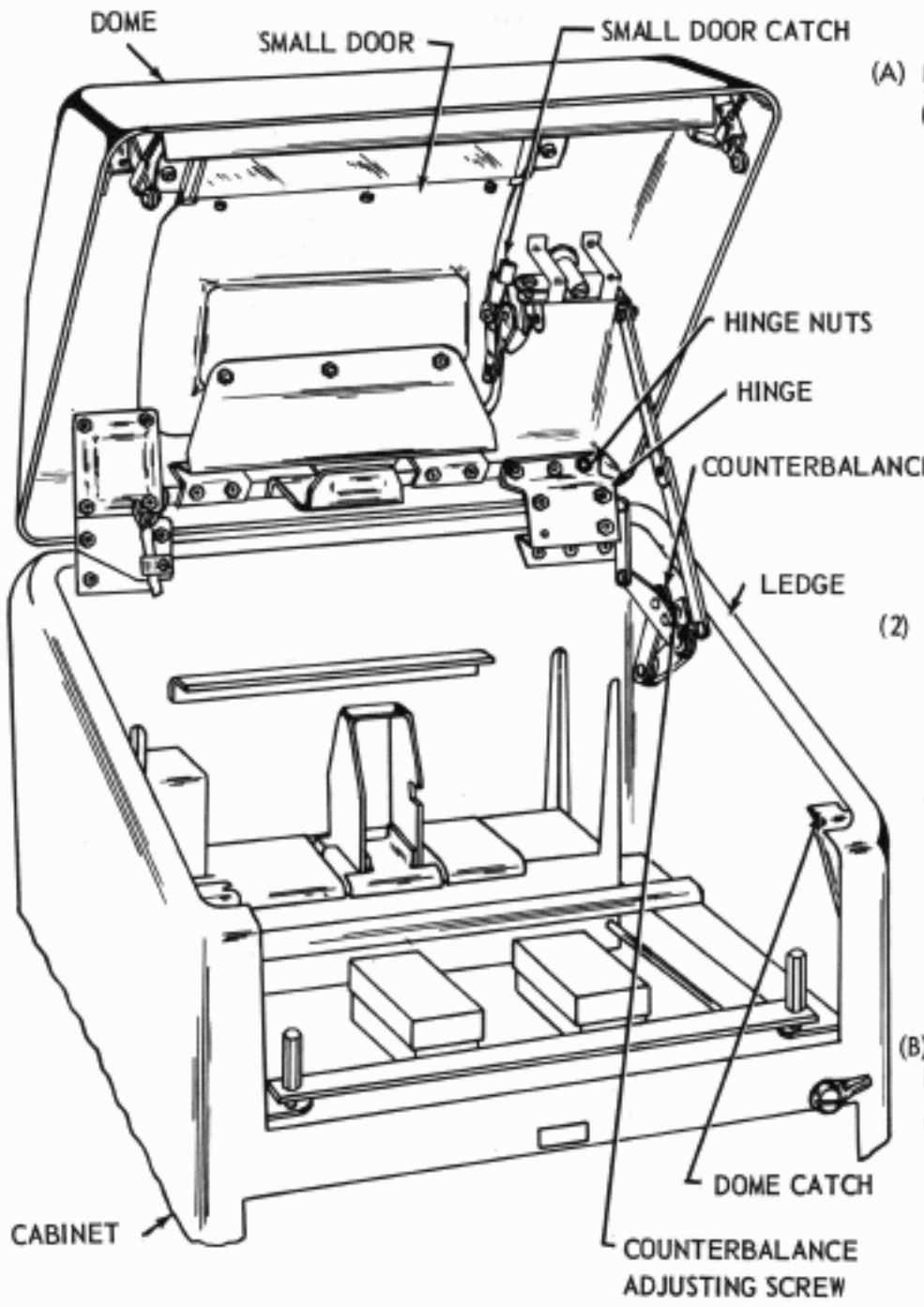

(A) DOME

(1) REQUIREMENT

THE DOME SHOULD BE CENTERED ON THE CABINET FROM RIGHT TO LEFT AND PLACED

MIN. 3/16 INCH
MAX. 1/4 INCH

FROM THE FRONT EDGE OF THE CABINET

TO ADJUST

POSITION THE DOME WITH THE SIX NUTS WHICH SECURE THE DOME HINGES TO THE DOME LOOSENED. TIGHTEN THE NUTS.

(2) REQUIREMENT

THERE SHOULD BE A LIGHT-PROOF SEAL AT THE REAR OF THE DOME BETWEEN THE RUBBER GASKET AND THE TOP EDGE OF THE CABINET.

TO ADJUST

POSITION THE DOME DOWNWARD WITH THE SIX NUTS, WHICH SECURE THE DOME HINGES TO THE CABINET LOOSENED. TIGHTEN THE NUTS.

(B) DOME CATCH

(1) REQUIREMENT

THE DOME SHOULD LATCH SECURELY WITH A LIGHT-PROOF SEAL AT THE FRONT OF THE DOME BETWEEN THE RUBBER GASKET AND THE TOP EDGE OF THE CABINET.

(2) REQUIREMENT

THE DOME CATCH SHOULD UN-LATCH WHEN THE CATCH BUTTON IS DEPRESSED NO DEEPER THAN THE OUTER SURFACE OF THE DOME

TO ADJUST

BEND THE TWO DOME CATCHES

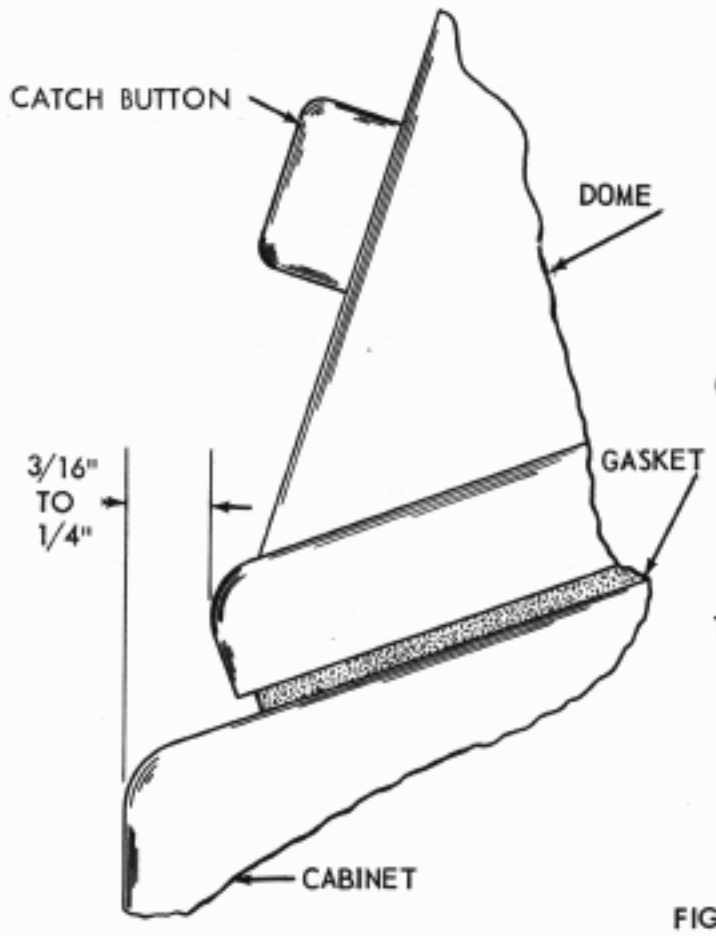

(C) SMALL DOOR CATCH

(1) REQUIREMENT

THE SMALL DOOR SHOULD SECURELY LATCH.

(2) REQUIREMENT

WHEN THE DOOR IS RELEASED FROM ITS CATCH IT SHOULD SPRING OPEN AT LEAST 1/2 INCH.

TO ADJUST

BEND THE SMALL DOOR CATCH. RECHECK REAR OF DOOR TO MAKE CERTAIN IT IS FLUSH WITH OR SLIGHTLY ABOVE THE DOME.

FIGURE 1-83 CABINET

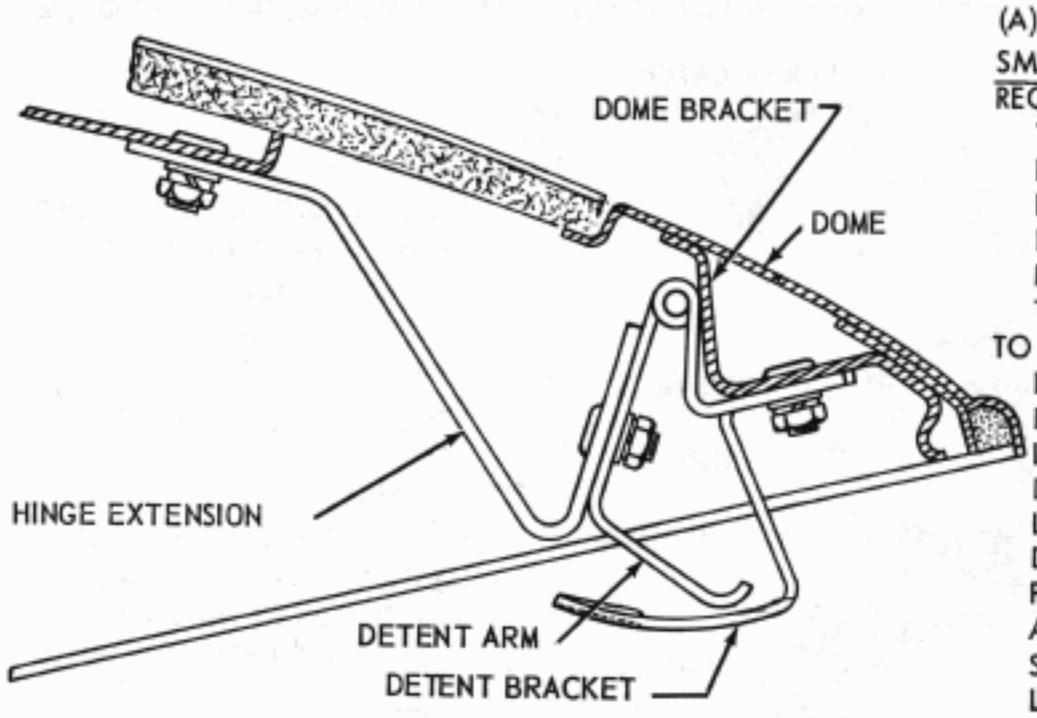

(A)

SMALL DOOR

REQUIREMENT

THE SMALL DOOR SHOULD BE CENTERED FROM RIGHT TO LEFT. IT SHOULD BE POSITIONED SO AS TO PROVIDE A LIGHT TIGHT SEAL BETWEEN THE RUBBER GASKET AND THE LEDGE OF THE DOME AT ALL POINTS.

TO ADJUST

LOOSEN THE TWO NUTS THAT SECURE DETENT BRACKET TO DOME BRACKET. LOOSEN THE TWO NUTS THAT SECURE DETENT ARM TO HINGE EXTENSION. LOOSEN THE FOUR NUTS THAT SECURE DOOR HINGES TO DOME BRACKET. PUSH HINGES AGAINST DOME BRACKET AND TIGHTEN THE FOUR NUTS THAT SECURE HINGES TO DOME BRACKET. LOOSEN THE THREE NUTS THAT SECURE HINGE EXTENSION TO DOOR. SLIDE DOOR TO ITS EXTREME FORWARD POSITION AND POSITION CENTRALLY FROM SIDE TO SIDE. TIGHTEN THE THREE NUTS THAT SECURE HINGE EXTENSION TO DOOR. LOOSEN THE FOUR NUTS THAT FASTEN DOOR HINGES TO HINGE EXTENSION. POSITION DOOR FLUSH WITH OR SLIGHTLY ABOVE DOME. TIGHTEN THE FOUR NUTS THAT FASTEN HINGES TO HINGE EXTENSION. AGAIN LOOSEN THE THREE NUTS THAT SECURE HINGE EXTENSION TO DOOR. CLOSE DOOR AND SLIDE IT TOWARD REAR TO PROVIDE A LIGHT TIGHT SEAL AT FRONT CORNERS OF DOOR. TIGHTEN THE THREE NUTS THAT SECURE HINGE EXTENSION TO DOOR.

(B)

DETENT ARM AND DETENT BRACKET

(1) REQUIREMENT

THE DETENT ARM SHOULD BE HORIZONTALLY IN LINE WITH THE UPPER EDGES OF THE TWO HINGES.

TO ADJUST

POSITION THE ARM AND TIGHTEN THE TWO NUTS.

(2) REQUIREMENT

WITH THE DOME IN FULLY RAISED POSITION AND THE SMALL DOOR LATCH BUTTON DEPRESSED, THE SMALL DOOR SHOULD NOT OPEN BEYOND ITS DETENT. WITH THE DOME CLOSED, THE SMALL DOOR SHOULD SPRING OPEN AT LEAST 1/2 INCH WHEN RELEASED FROM ITS CATCH.

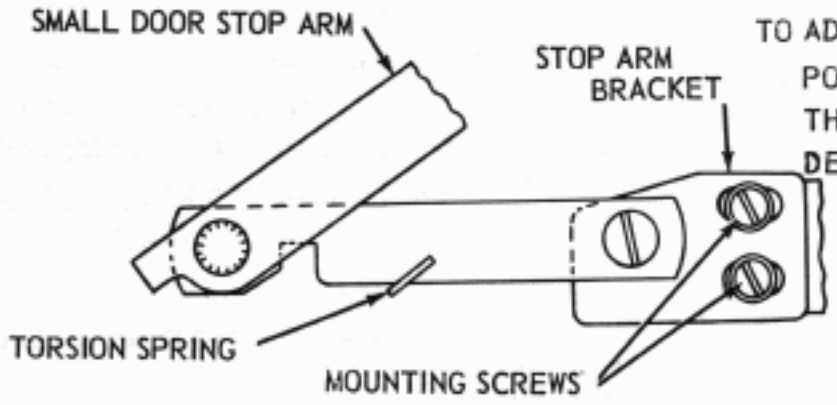

TO ADJUST

POSITION THE DETENT BRACKET AND TIGHTEN THE TWO NUTS. IF NECESSARY REPOSITION THE DETENT ARM. RECHECK ALL NUTS FOR TIGHTNESS.

(C)

SMALL DOOR STOP ARM

REQUIREMENT

STOP ARM SHOULD BE FREE OF BINDS WHEN DOOR IS OPENED OR CLOSED.

TO ADJUST

LOOSEN THE STOP ARM BRACKET MOUNTING SCREWS. CLOSE THE DOOR. DISCONNECT THE TORSION SPRING. ALIGN STOP ARM FOR FREENESS AND TIGHTEN MOUNTING SCREWS WITH DOOR CLOSED. REPLACE TORSION SPRING.

(D)

COUNTERBALANCE

REQUIREMENT

THE DOME SHOULD REMAIN IN ITS MAXIMUM OPEN POSITION AND NOT CLOSE UNLESS MOVED MANUALLY

TO ADJUST

TURN THE SPRING ADJUSTING SCREW. (FIGURE 1-83)

FIGURE 1-84. CABINET MECHANISMS

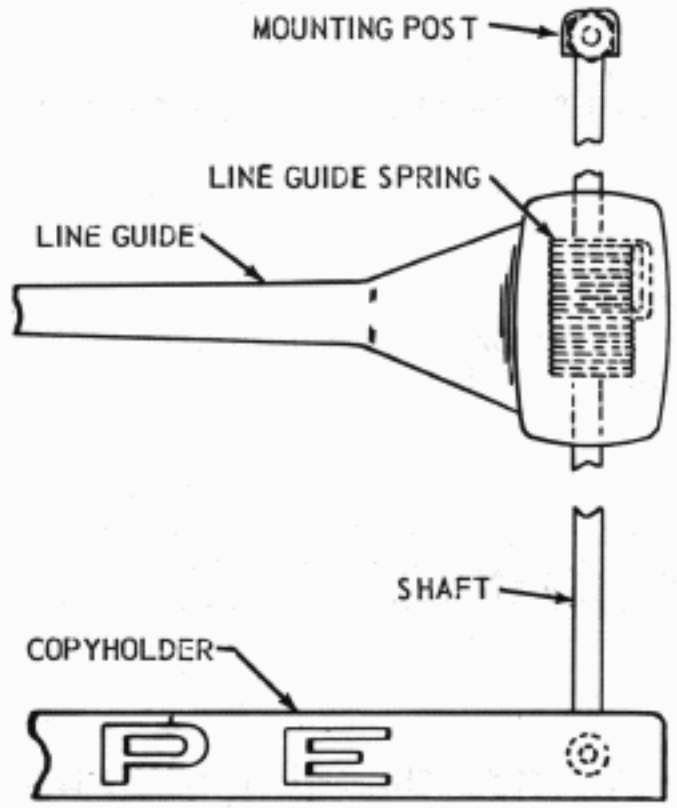

(A) COPYHOLDER

REQUIREMENT

THERE SHOULD BE SUFFICENT TENSION ON THE LINE GUIDE TO HOLD COPY IN PLACE AND TO PREVENT THE LINE GUIDE FROM SLIPPING DOWN ITS SHAFT. LINE GUIDE SHOULD BE PARALLEL TO COPYHOLDER TRAY.

TO ADJUST

REMOVE THE MOUNTING SCREWS OR NUTS FROM THE LINE GUIDE SHAFT AND TURN THE SHAFT. REMOUNT THE SHAFT AND TIGHTEN SCREWS OR NUTS. BEND LINE GUIDE TO MAKE IT PARALLEL TO COPYHOLDER.

(B) WINDOW AND PAPER GUIDE

(FOR SPROCKET FEED UNITS SEE SECTION 2)

(1) REQUIREMENT

WHEN THE SMALL DOOR IS OPENED OR CLOSED, THE WINDOW SHOULD CLEAR PAPER GUIDE BY 1/16 INCH.

NOTE

0.080 TO 0.110 INCH ON SKIN TIGHT CABINET. (SEE PAGE 1-92.)

TO ADJUST

POSITION WINDOW WITH ITS RETAINER SCREWS LOOSENED. CHECK TO SEE THAT GASKET IS BETWEEN GLASS AND METAL SURFACE.

(2) REQUIREMENT

WITH SMALL DOOR CLOSED, THE BOTTOM EDGE OF THE PAPER GUIDE SHOULD BE

MIN. 7/64 INCH --- MAX. 9/64 INCH BELOW BOTTOM SURFACE OF WINDOW

TO ADJUST

POSITION THE PAPER GUIDE WITH ITS MOUNTING SCREWS LOOSENED.

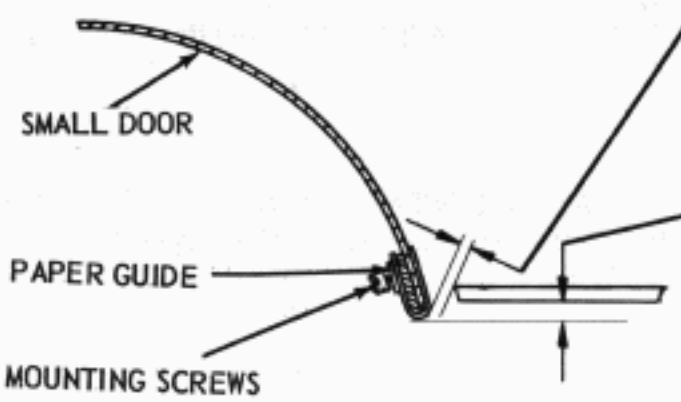

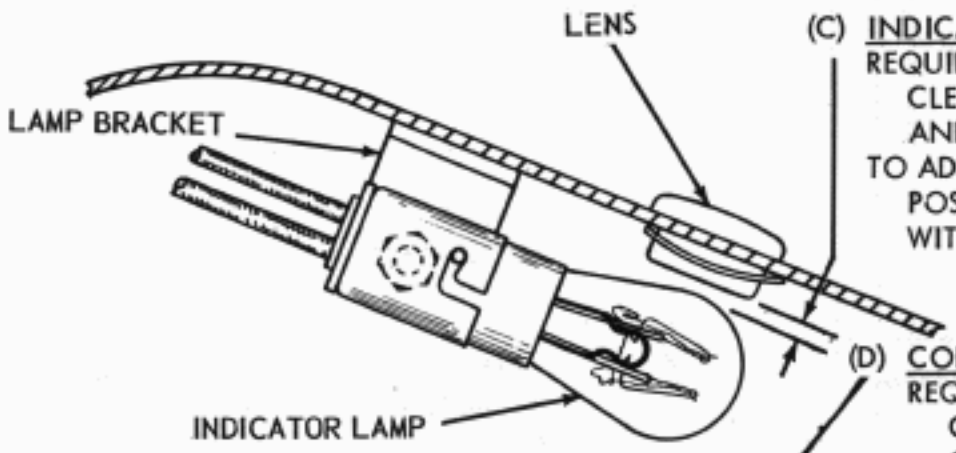

(C) INDICATOR LAMP

REQUIREMENT

CLEARANCE BETWEEN INDICATOR LAMP AND LENS - APPROXIMATELY 1/16 INCH

TO ADJUST

POSITION LAMP HOLDER ON ITS BRACKET WITH MOUNTING SCREWS LOOSENED.

(D) COPY LAMP

REQUIREMENT

CLEARANCE BETWEEN COPY LAMP AND COVER APPROXIMATELY 1/16 INCH

TO ADJUST

POSITION LAMP HOLDER ON ITS BRACKET WITH ITS MOUNTING NUT LOOSENED. (ON SKIN TIGHT CABINETS, ROTATE SHIELD FOR DESIRED ILLUMINATION)

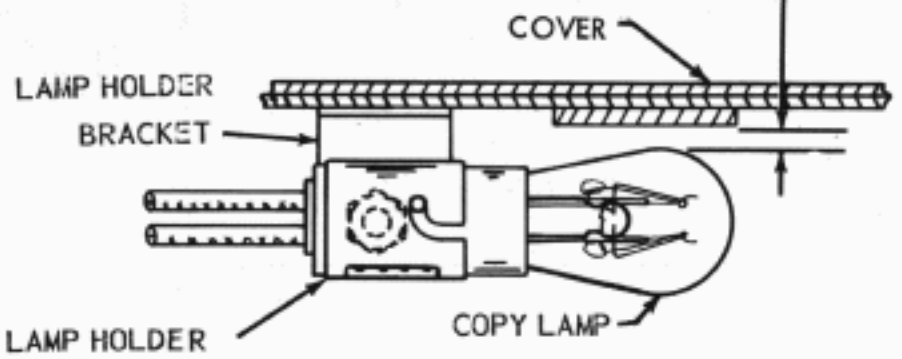

FIGURE 1-85. CABINET MECHANISMS

NOTE: REST CABINET ON A LEVEL FLOOR WHEN MAKING THE FOLLOWING ADJUSTMENTS.

(A) PRINTER COVERS
REQUIREMENT

1. GENERALLY, ALL GAPS AROUND THE COVERS SHOULD BE EQUAL WITHIN ± 1/16 INCH

2. WITH COVERS CLOSED, CLEARANCE BETWEEN TOP EDGE OF COVERS AND BOTTOM EDGE OF ADJACENT COVERS SHOULD BE APPROXIMATELY 1/16 INCH
COVERS MUST NOT TOUCH WHEN BEING OPENED.

3. WITH COVERS CLOSED, SIDE CLEARANCE BETWEEN COVERS AND ADJACENT COVERS SHOULD BE APPROXIMATELY EQUAL

TO ADJUST
POSITION THE COVERS WITH THEIR HINGE NUTS FRICTION TIGHT.

NOTE: CLEARANCE BETWEEN LOWER EDGE OF BOTTOM COVER AND CENTER CROSS BRACE SHOULD BE MAX. 1/4 INCH

TO ADJUST
REFINE #2 ABOVE WITH LARGER GAP BEGINNING AT TOP COVER.

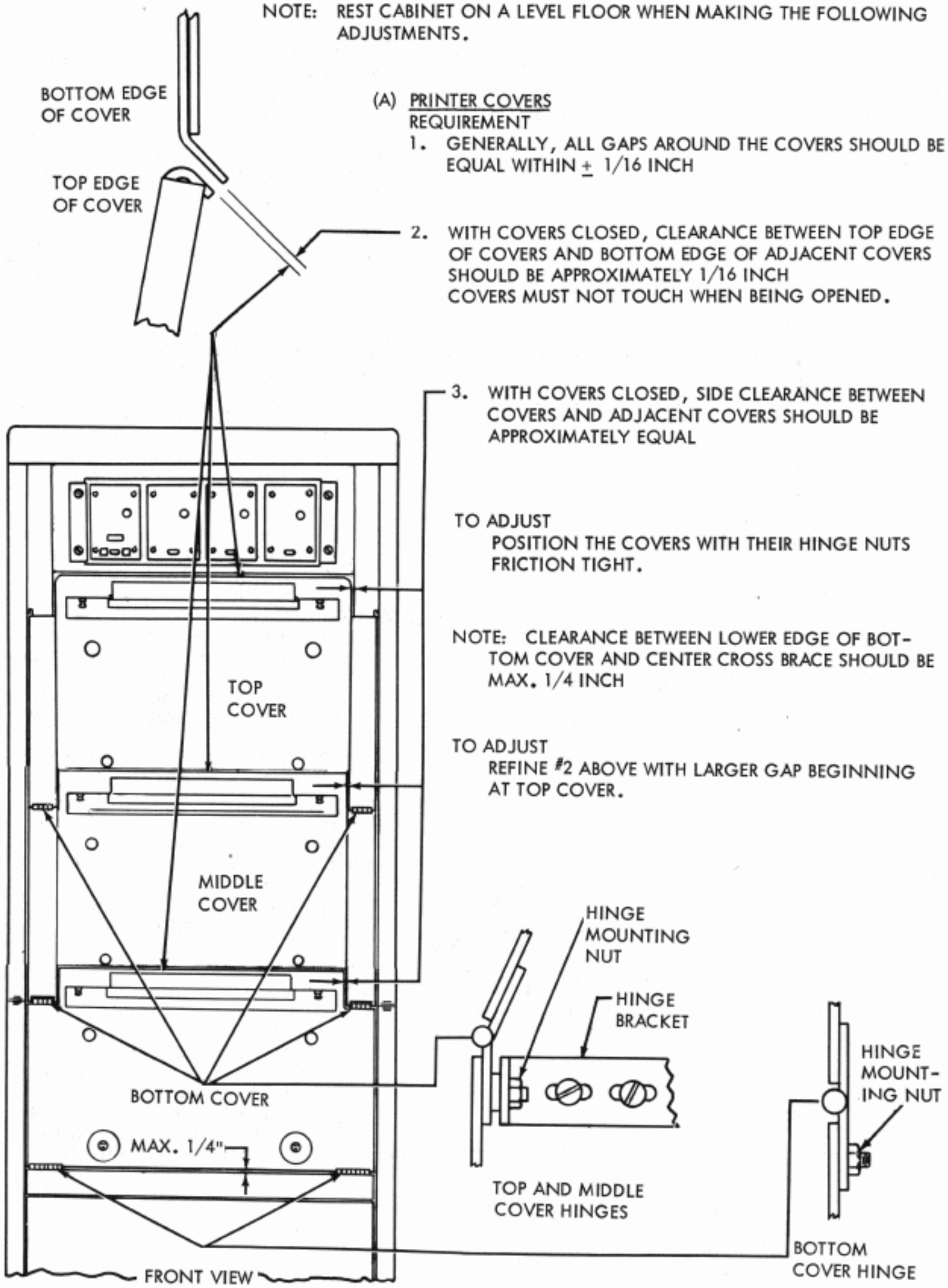

FIGURE 1-86. CABINET, FOR MULTIPLE MOUNTING PAGE PRINTERS

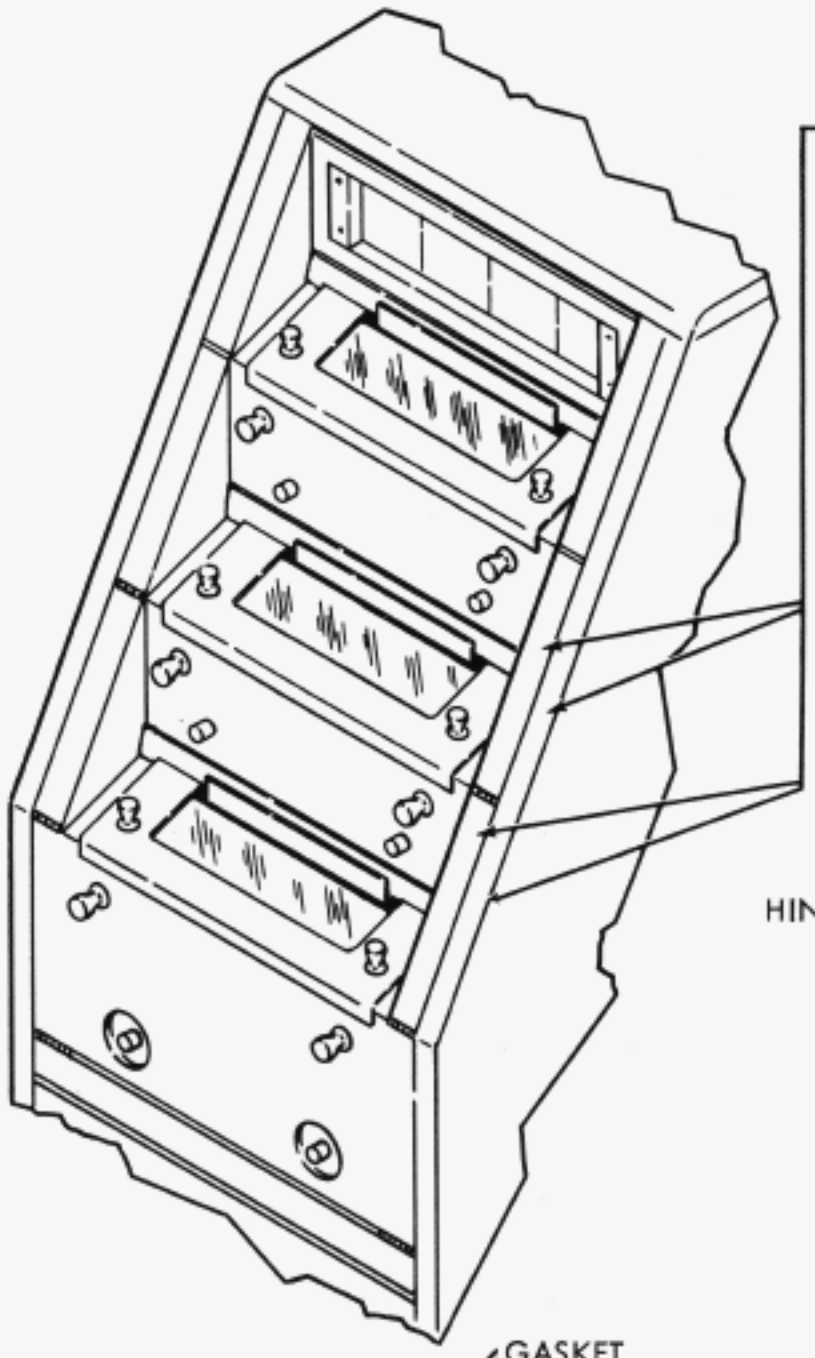

(A) TOP AND MIDDLE PRINTER COVER DEPTH

REQUIREMENT

WITH PRINTER COVERS IN CLOSED POSITION, THEIR LEFT AND RIGHT OUTER SURFACES SHOULD BE FLUSH WITH OR NO MORE THAN 1/16 INCH BELOW LEFT AND RIGHT FLANGES OF CABINET SHELL.

TO ADJUST

POSITION PRINTER COVERS WITH THEIR RESPECTIVE FOUR HINGE BRACKET MOUNTING SCREWS FRICTION TIGHT.

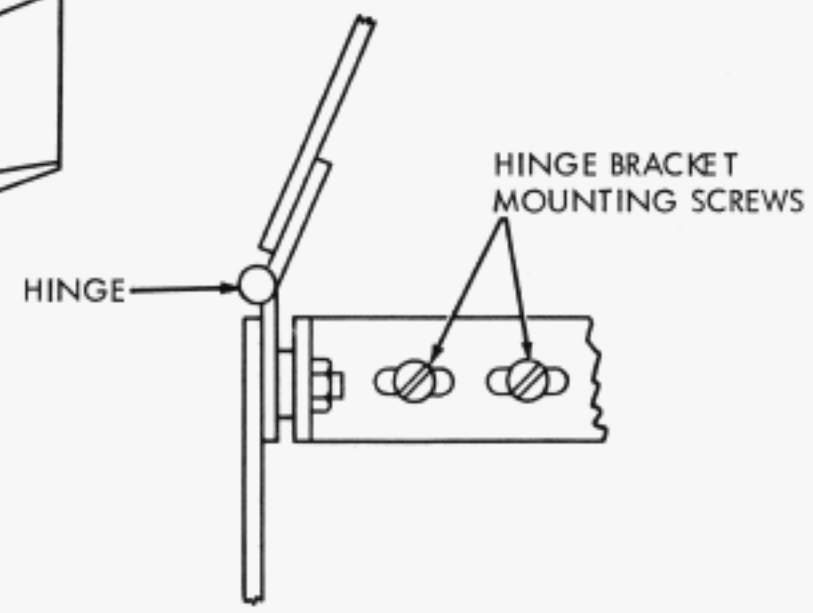

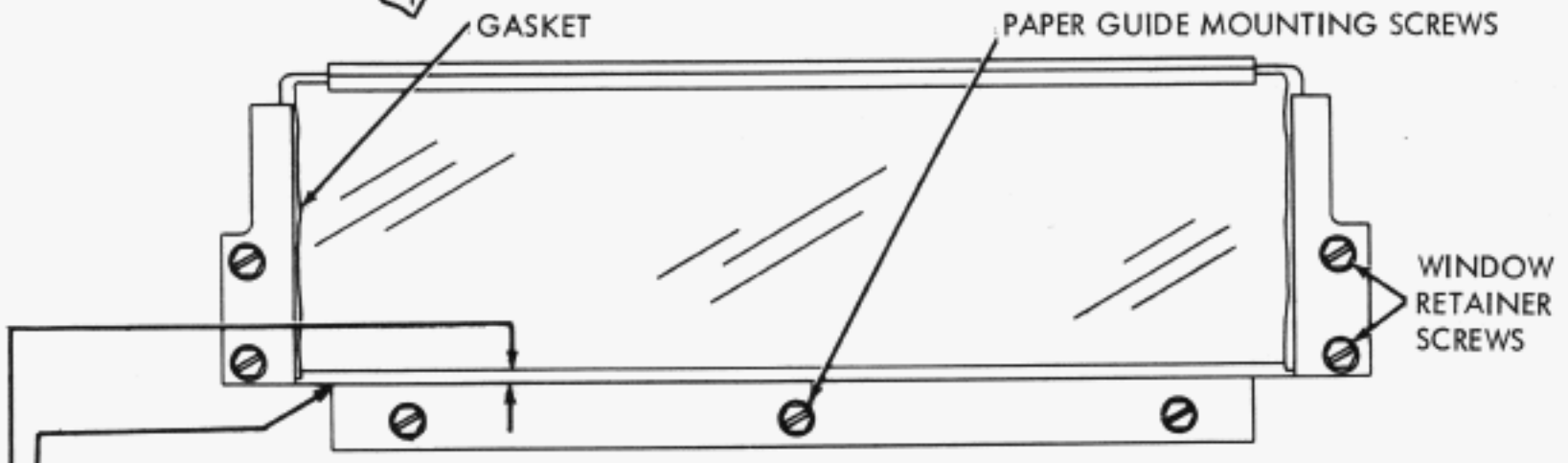

(B) PAPER GUIDE

REQUIREMENT

BOTTOM EDGE OF PAPER GUIDE SHOULD BE FLUSH WITH BOTTOM SURFACE OF WINDOW.

TO ADJUST

POSITION PAPER GUIDE WITH THREE MOUNTING SCREWS LOOSENED.

(C) WINDOW

REQUIREMENT

CLEARANCE BETWEEN PAPER AND PAPER GUIDE WHEN CLOSING THE PAPER ACCESS DOOR SHOULD BE
MIN. 1/16 INCH

TO ADJUST

POSITION WINDOW WITH FOUR WINDOW RETAINER SCREWS LOOSENED. MAKE SURE GASKET IS BETWEEN GLASS WINDOW AND METAL SURFACE.

FIGURE 1-87. CABINET, FOR MULTIPLE MOUNTING PAGE PRINTERS

PRINTER COVER LATCHES

REQUIREMENT

1. WITH COVER IN CLOSED POSITION, BOLTS SHOULD TOUCH STRIKER PLATES.

2. BOLTS SHOULD ENGAGE STRIKER PLATES BY A MINIMUM OF 1/16 INCH.

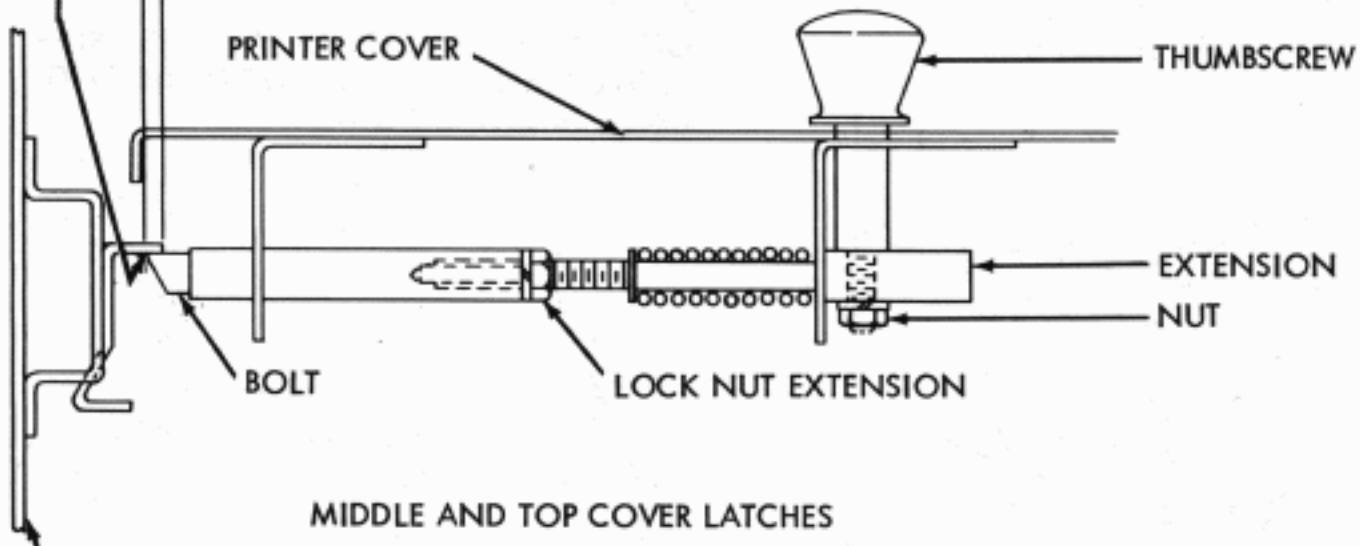

MIDDLE AND TOP COVER LATCHES

TO ADJUST

1. WITH COVER OPEN AND STRIKER PLATE MOUNTING SCREWS FRICTION TIGHT, MOVE STRIKER PLATES TOWARD FRONT OF CABINET. CLOSE COVER AND OPEN PAPER ACCESS DOOR. POSITION STRIKER PLATES TO MEET (1) ABOVE. CLOSE PAPER ACCESS DOOR. CAREFULLY MOVE PRINTER COVER THUMBSCREWS TOWARD EACH OTHER AND OPEN PRINTER COVER. TIGHTEN STRIKER PLATE MOUNTING SCREWS.

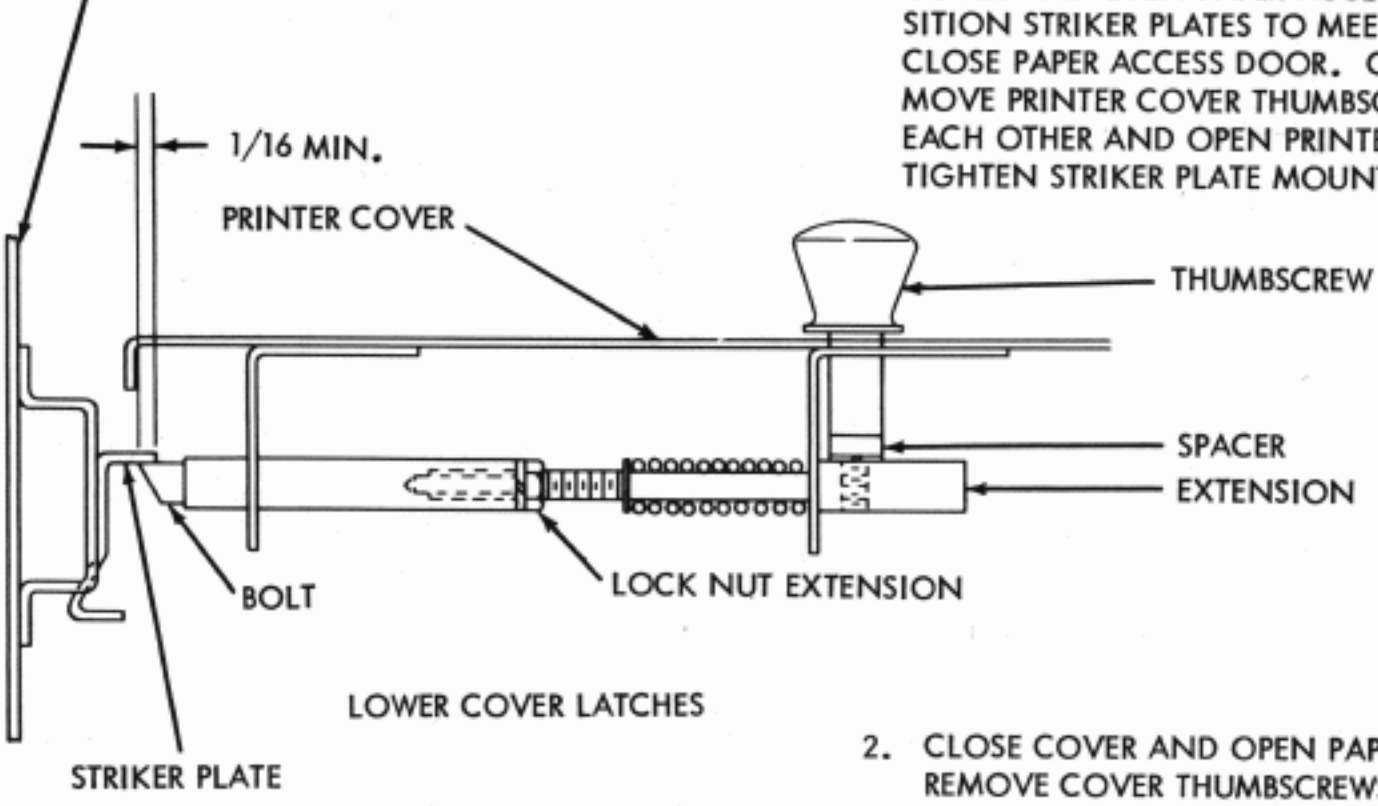

LOWER COVER LATCHES

2. CLOSE COVER AND OPEN PAPER ACCESS DOOR. REMOVE COVER THUMBSCREWS AND THEIR LOCKWASHERS FROM EXTENSIONS. WITH THEIR LOCKNUTS LOOSE, ROTATE EXTENSIONS TO MOVE BOLTS RIGHT OR LEFT AS REQUIRED. ALIGN TAPPED HOLE IN EXTENSION WITH HOLE IN COVER. REPLACE THUMBSCREWS AND LOCKWASHERS. TIGHTEN EXTENSION LOCKNUTS.

FIGURE 1-88. CABINET, FOR MULTIPLE MOUNTING PAGE PRINTERS

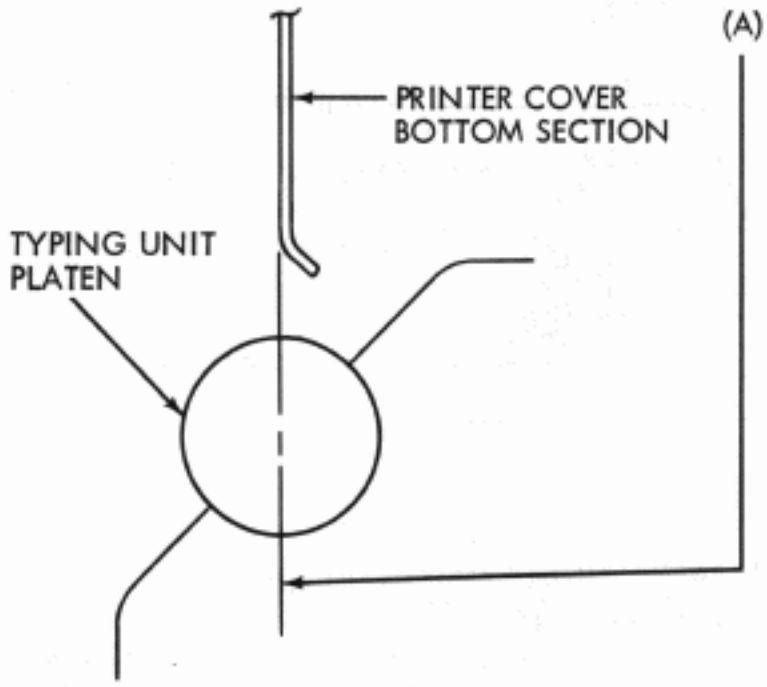

(A) SLIDE STOPS

REQUIREMENT

(1) WITH EACH PRINTER UNIT IN REARMOST POSITION, CENTER OF TYPING UNIT PLATEN SHOULD BE IN LINE WITH, PLUS OR MINUS 1/16 INCH, FRONT EDGE OF PRINTER COVER ABOVE IT FOR THE UPPER TWO TYPING UNITS.

(2) CENTER OF PLATEN OF BOTTOM TYPING UNIT SHOULD BE IN LINE WITH FRONT EDGE OF COVER ABOVE IT WITHIN 1/16 INCH FORWARD - 3/16 INCH REARWARD.

TO ADJUST

(1) (2) OPEN COVER AND LOOSEN SLIDE MOUNTING SCREWS FRICTION TIGHT. POSITION SLIDE, BASE AND TYPING UNIT TO MEET REQUIREMENT.

NOTE: THIS ADJUSTMENT AFFECTS CARRIAGE RETURN AND LINE FEED LEVER ADJUSTMENTS. THEREFORE, IF SLIDE STOPS ARE READJUSTED, CARRIAGE RETURN AND LINE FEED LEVERS SHOULD ALSO BE READJUSTED.

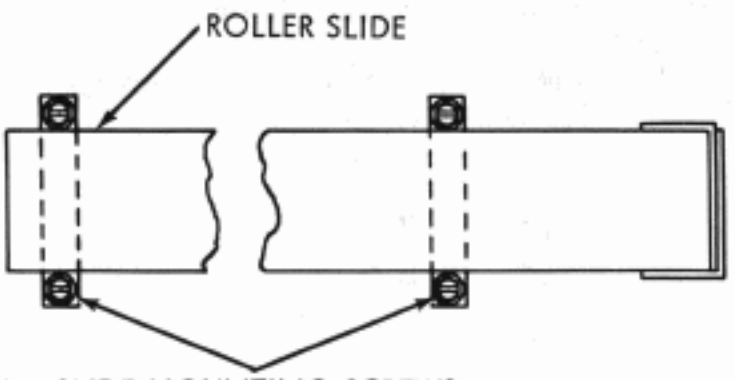

(B) CARRIAGE RETURN AND LINE FEED LEVERS

REQUIREMENT (EACH PRINTER COVER)

WITH PRINTER COVER CLOSED
MIN. 3/32 INCH --- MAX. 5/32 INCH CLEARANCE BETWEEN HEAD OF LEVER ADJUSTING SCREW AND REAR SURFACE OF KEYLEVER MOUNTING BRACKET.

TO ADJUST

DEPRESS KEYLEVER ASSEMBLY AND ROTATE IT 90 DEGREES. REMOVE KEYLEVER ASSEMBLY AND KEYLEVER SPRING. CLOSE COVER AND TURN LEVER ADJUSTING SCREW, ACCESSIBLE THROUGH HOLE IN COVER, TO MEET REQUIREMENT.

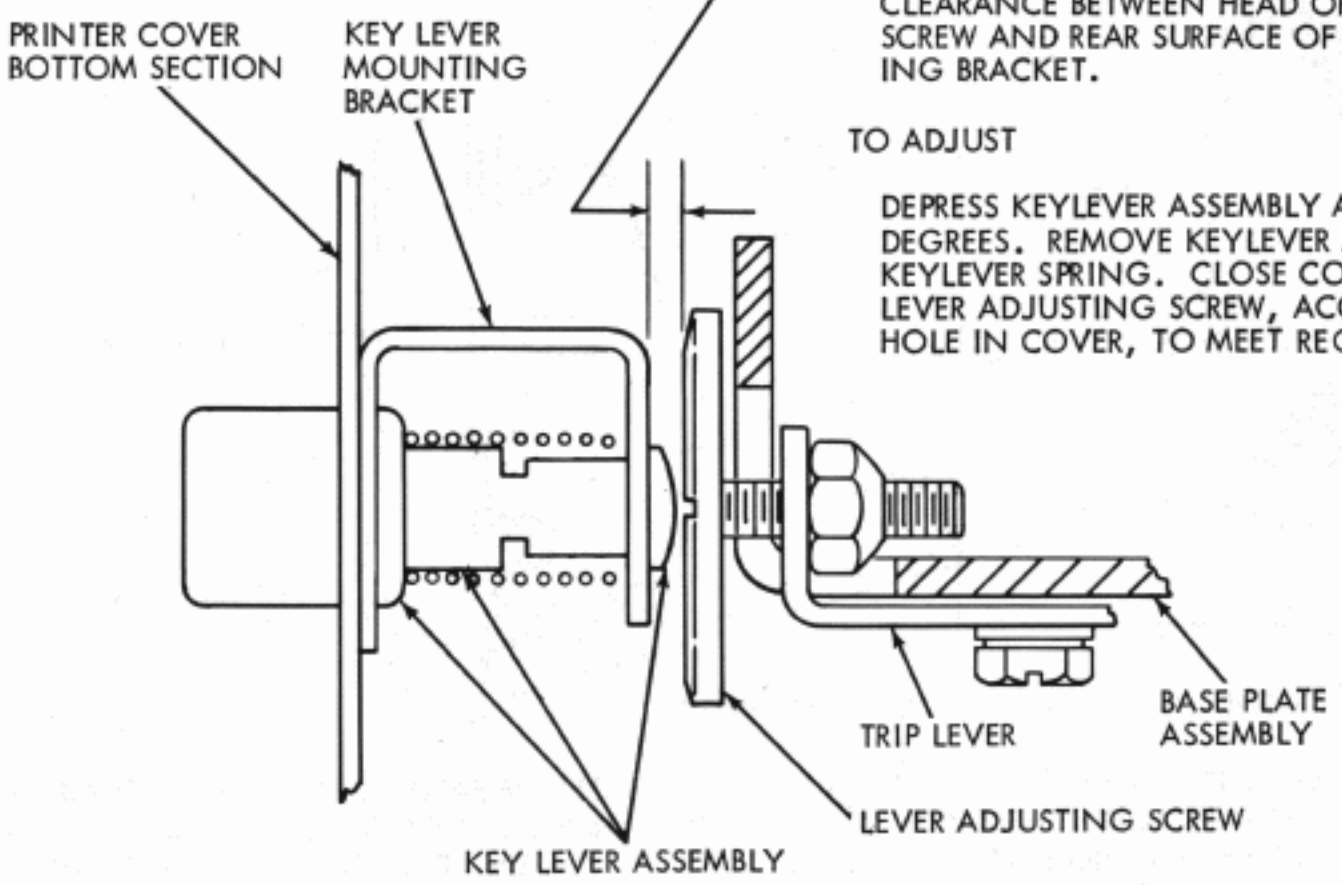

FIGURE 1-89. CABINET, FOR MULTIPLE MOUNTING PAGE PRINTERS

(C) PAPER SPINDLE CYLINDER REGULATING BUSHING

TO CONTROL THE TENSION OF THE CYLINDER ON THE RIGHT HUB, POSITION REGULATING BUSHING TO THE RIGHT OR LEFT WITH ITS SET SCREW LOOSENED.

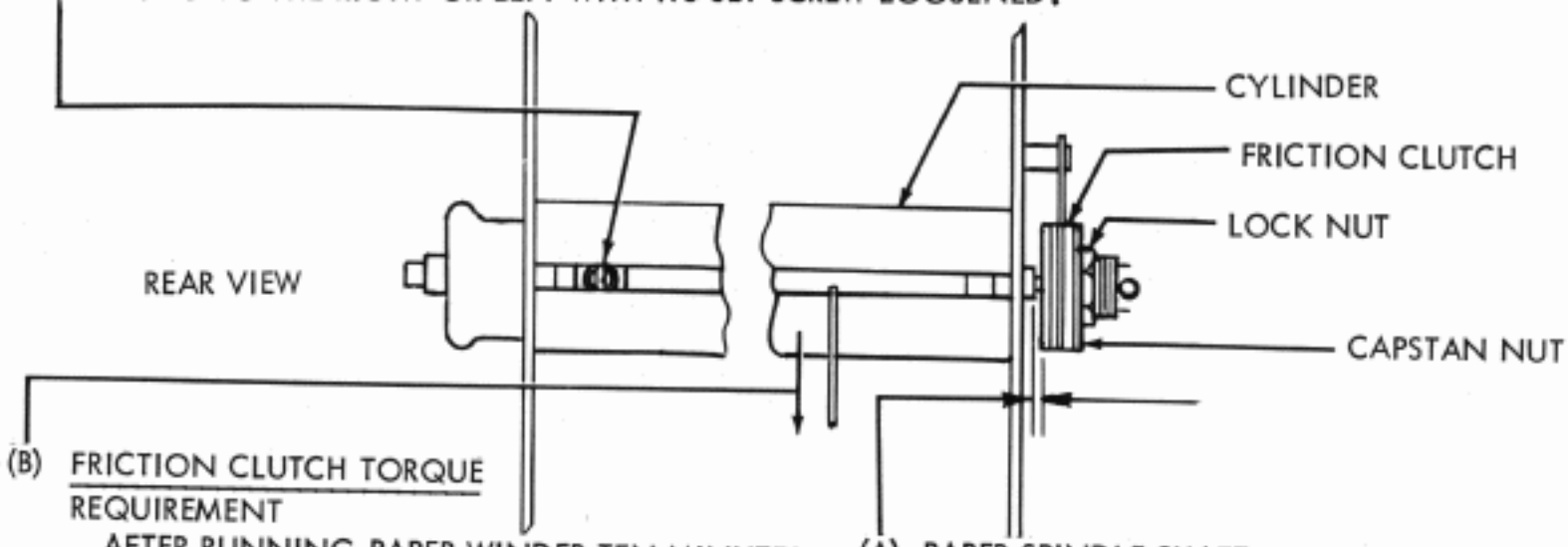

(B) FRICTION CLUTCH TORQUE

REQUIREMENT

AFTER RUNNING PAPER WINDER TEN MINUTES WITH CYLINDER HELD STATIONARY IT SHOULD REQUIRE

MIN. 5 OZS. --- MAX. 7 OZS.

TO HOLD CYLINDER STATIONARY AGAINST ROTATION BY DRIVEN PULLEY.

TO ADJUST

POSITION CAPSTAN NUT WITH LOCK NUT LOOSENED.

(A) PAPER SPINDLE SHAFT END PLAY

REQUIREMENT

CLEARANCE BETWEEN SHOULDER OF SHAFT AND FRICTION DRIVE ASSEMBLY SHOULD BE 1/32 INCH. LEFT END OF SHAFT SHOULD TOUCH WICK IN FRICTION DRIVE ASSEMBLY.

TO ADJUST

POSITION BEARING BRACKET BY MEANS OF ELONGATED MOUNTING HOLES.

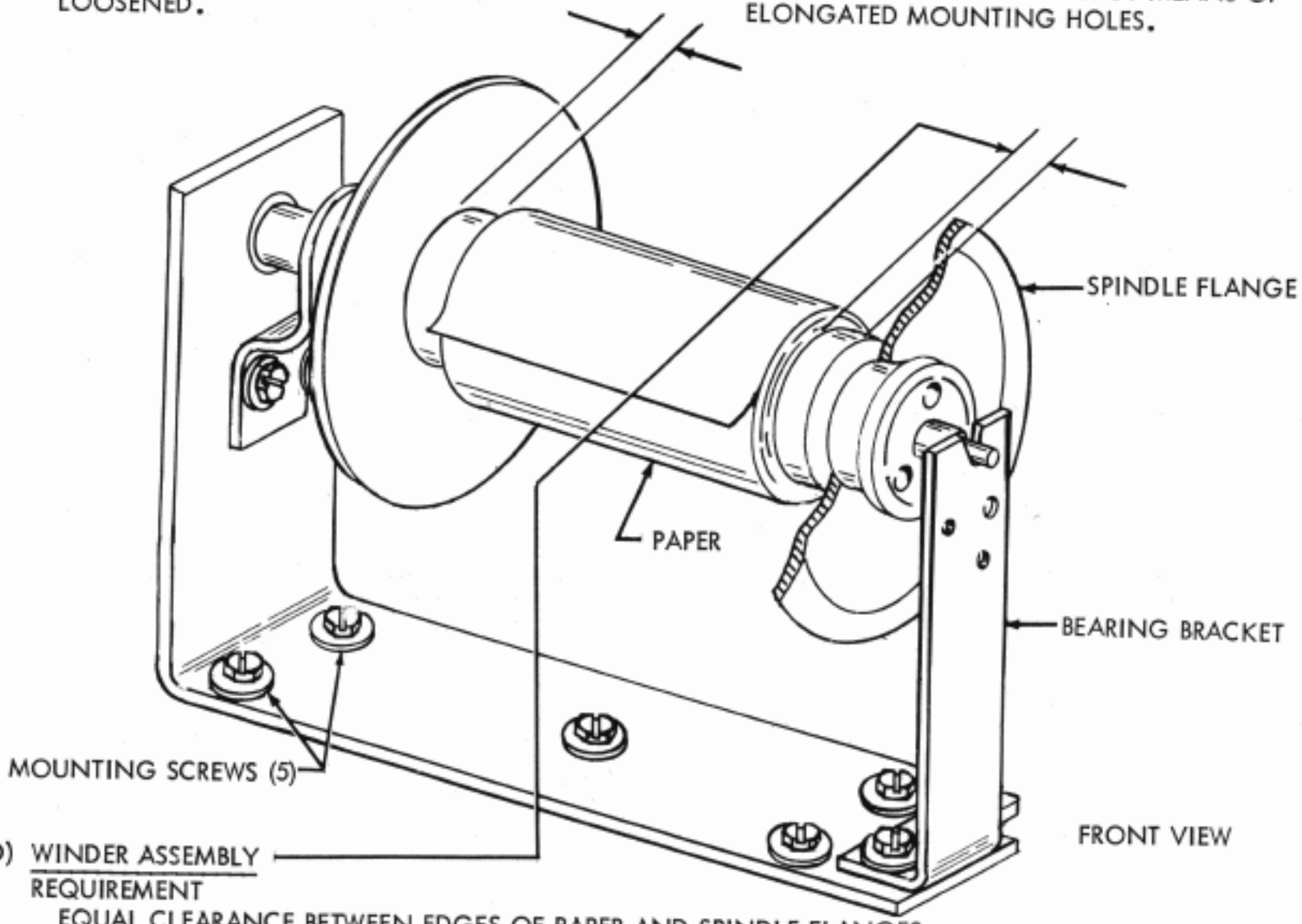

(D) WINDER ASSEMBLY

REQUIREMENT

EQUAL CLEARANCE BETWEEN EDGES OF PAPER AND SPINDLE FLANGES.

TO ADJUST

THREAD PAPER AROUND PLATEN OF TYPING UNIT. GRASP EDGES OF PAPER AS IT COMES AROUND TOP OF PLATEN ROLLER AND ALIGN THEM WITH EDGES OF PAPER BEING FED INTO PLATEN. PULL TOP FREE EDGE OF PAPER SO THERE IS NO SLACK AND LOCK PAPER ON PLATEN. FEED PAPER MANUALLY UNTIL IT CAN BE THREADED ONTO WINDER CYLINDER. MOVE WINDER ASSEMBLY WITH ITS MOUNTING SCREWS LOOSENED TO GET EQUAL CLEARANCE BETWEEN BOTH EDGES OF PAPER AND SPINDLE FLANGES.

FIGURE 1-90. PAPER WINDER (FOR MULTIPLE MOUNTED PAGE PRINTERS)

(A) PULLEY ALIGNMENT

REQUIREMENT

PROJECTED PLANE OF EACH PULLEY SHOULD BE IN LINE WITH EACH OTHER AND PARALLEL TO SIDE FRAME.

TO ADJUST

LOOSEN DRIVER PULLEY ADJUSTING SCREW.
MOVE IN OR OUT TO MEET REQUIREMENT.
TIGHTEN SCREW.

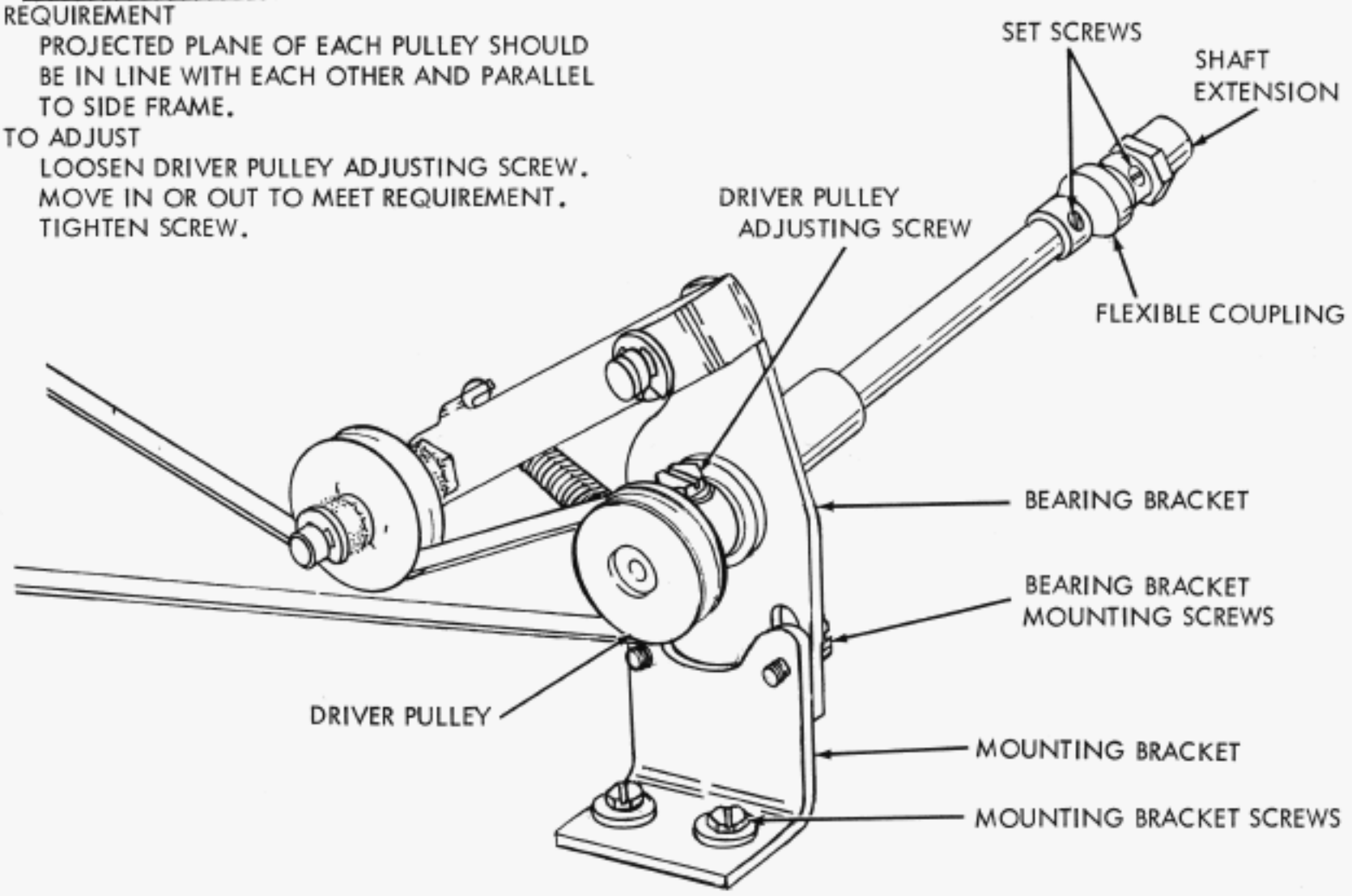

(B) BEARING BRACKET ADJUSTMENT

NOTE: THE INTERMEDIATE GEAR BRACKET ADJUSTMENT (SEE FIG. 1-11) SHOULD BE MADE BEFORE MAKING THIS ADJUSTMENT.

REQUIREMENT

BEARING BRACKET SHOULD BE POSITIONED SO THAT CENTER LINE OF INTERMEDIATE SHAFT EXTENSION WILL COINCIDE WITH CENTER LINE OF INTERMEDIATE SHAFT IN BOTH HORIZONTAL AND VERTICAL PLANES.

TO ADJUST

(1) HORIZONTAL - LOOSEN MOUNTING BRACKET SCREWS TO FRICTION TIGHT. LOOSEN SET SCREWS IN FLEXIBLE COUPLING AND SLIDE COUPLING TOWARD PULLEY END OF SHAFT SO OPPOSITE END OF SHAFT IS VISIBLE. POSITION BRACKET TO ALIGN SHAFT EXTENSION WITH INTERMEDIATE SHAFT ON KEYBOARD BASE.

(2) VERTICAL - LOOSEN BEARING BRACKET MOUNTING SCREWS TO FRICTION TIGHT. POSITION BEARING BRACKET TO ALIGN SHAFT EXTENSION WITH INTERMEDIATE SHAFT ON KEYBOARD BASE. RETIGHTEN SCREWS. CONNECT SHAFT AND SHAFT EXTENSION BY REPLACING AND FASTENING FLEXIBLE COUPLING IN POSITION.

FIGURE 1-91. PAPER WINDER (FOR MULTIPLE MOUNTED PAGE PRINTERS)

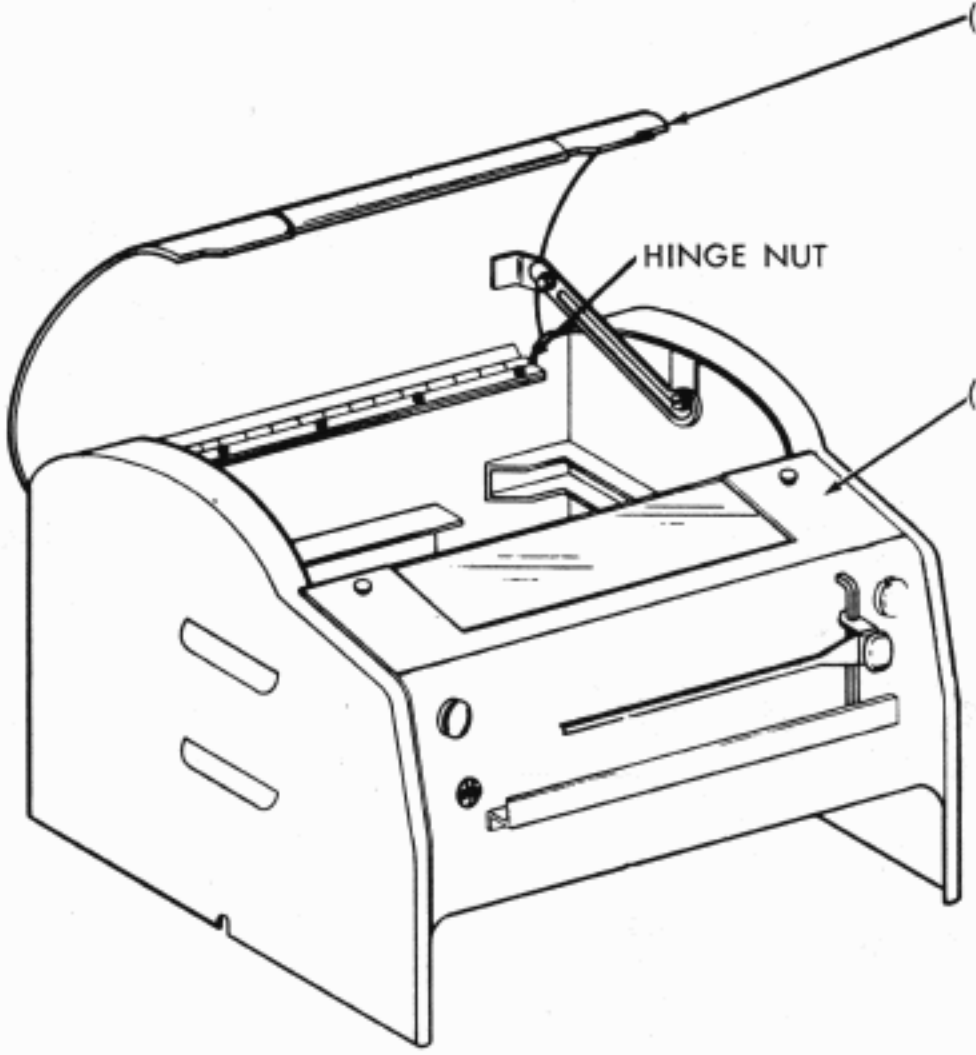

(A) DOME CENTERING
REQUIREMENT
1. THE DOME SHOULD BE CENTERED FROM SIDE TO SIDE ON THE CABINET.
2. FRONT EDGE OF DOME SHOULD FIT FLUSH TO FRONT EDGE OF CABINET.

TO ADJUST
POSITION THE DOME WITH THE SIX DOME HINGE NUTS LOOSENED.

(B) SMALL DOOR
REQUIREMENT
1. DOOR SHOULD BE FLUSH WITH TO 3/32 INCH ABOVE DOME.
2. DOOR SHOULD BE PARALLEL TO DOME WITHIN 3/32 INCH.

TO ADJUST
POSITION DOOR WITH THE FOUR HINGE EXTENSION NUTS LOOSENED.

FOR THE FOLLOWING ADJUSTMENTS SEE FIGURE 1-85
(C) PAPER GUIDE

*(D) WINDOW - REFER TO REQUIREMENT BELOW & FIG. 1-85

(E) INDICATOR AND COPY LAMPS
(F) COPYHOLDER LINE GUIDE

*(D) WINDOW (ALSO SEE FIGURE 1-85)
REQUIREMENT --- AS SMALL DOOR IS OPENED, IT SHALL CLEAR PROJECTION ON REAR LID BY MIN 0.005 INCH --- MAX 0.015 INCH
TO ADJUST --- POSITION THE WINDOW WITH ITS MOUNTING SCREWS (4) LOOSENED.

FIGURE 1-92 CABINET, SKIN TIGHT (TABLE OR RACK MOUNTING).

(A) PULLEY ALIGNMENT

REQUIREMENT

PROJECTED PLANE OF EACH PULLEY SHOULD BE IN LINE WITH EACH OTHER AND PARALLEL TO SIDE FRAME.

TO ADJUST

LOOSEN DRIVER PULLEY ADJUSTING SCREW. MOVE IN OR OUT TO MEET REQUIREMENT. TIGHTEN SCREW.

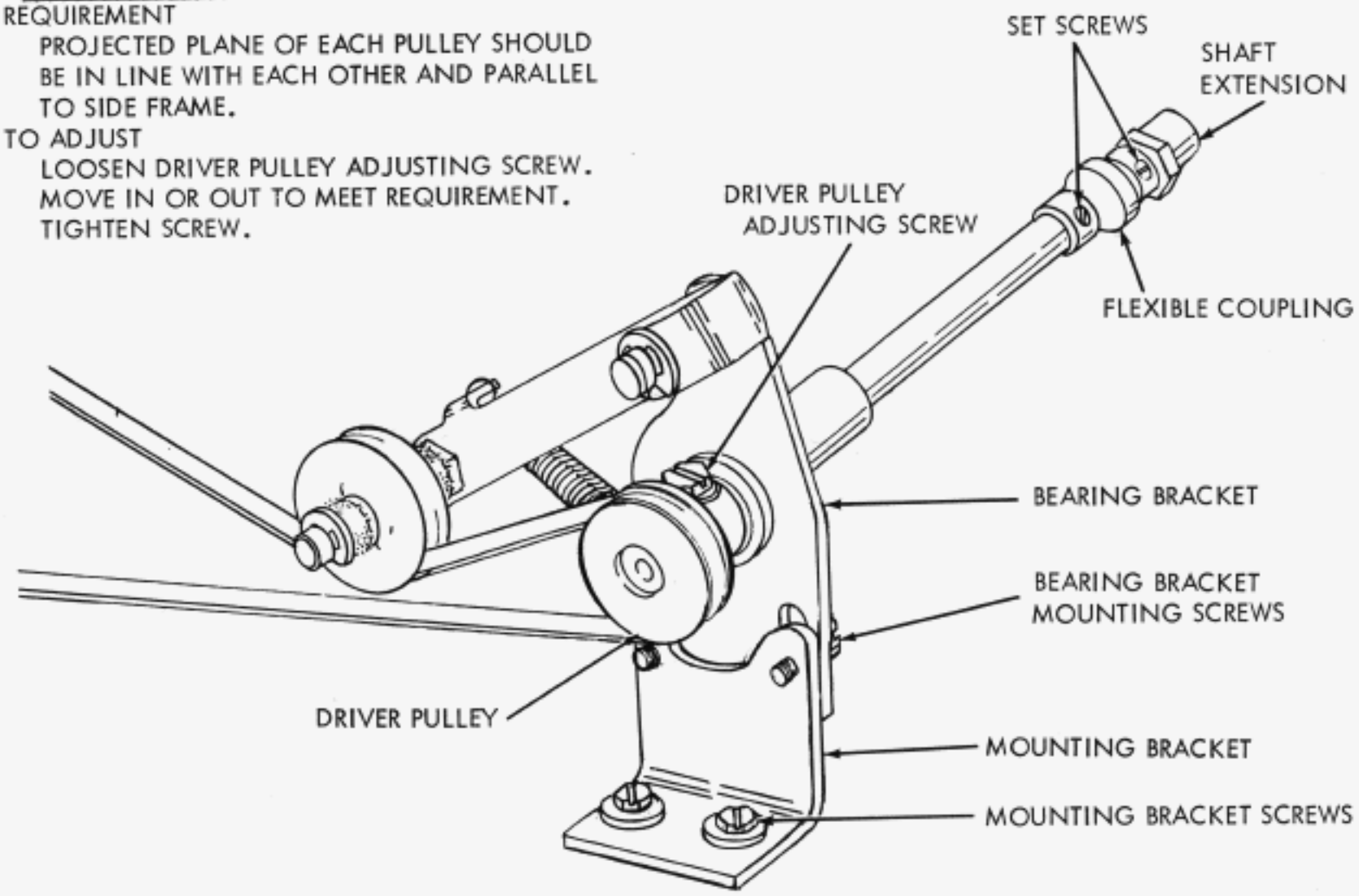

(B) BEARING BRACKET ADJUSTMENT

NOTE: THE INTERMEDIATE GEAR BRACKET ADJUSTMENT (SEE FIG. 1-11) SHOULD BE MADE BEFORE MAKING THIS ADJUSTMENT.

REQUIREMENT

BEARING BRACKET SHOULD BE POSITIONED SO THAT CENTER LINE OF INTERMEDIATE SHAFT EXTENSION WILL COINCIDE WITH CENTER LINE OF INTERMEDIATE SHAFT IN BOTH HORIZONTAL AND VERTICAL PLANES.

TO ADJUST

(1) HORIZONTAL - LOOSEN MOUNTING BRACKET SCREWS TO FRICTION TIGHT. LOOSEN SET SCREWS IN FLEXIBLE COUPLING AND SLIDE COUPLING TOWARD PULLEY END OF SHAFT SO OPPOSITE END OF SHAFT IS VISIBLE. POSITION BRACKET TO ALIGN SHAFT EXTENSION WITH INTERMEDIATE SHAFT ON KEYBOARD BASE.

(2) VERTICAL - LOOSEN BEARING BRACKET MOUNTING SCREWS TO FRICTION TIGHT. POSITION BEARING BRACKET TO ALIGN SHAFT EXTENSION WITH INTERMEDIATE SHAFT ON KEYBOARD BASE. RETIGHTEN SCREWS. CONNECT SHAFT AND SHAFT EXTENSION BY REPLACING AND FASTENING FLEXIBLE COUPLING IN POSITION.

FIGURE 1-91. PAPER WINDER (FOR MULTIPLE MOUNTED PAGE PRINTERS)

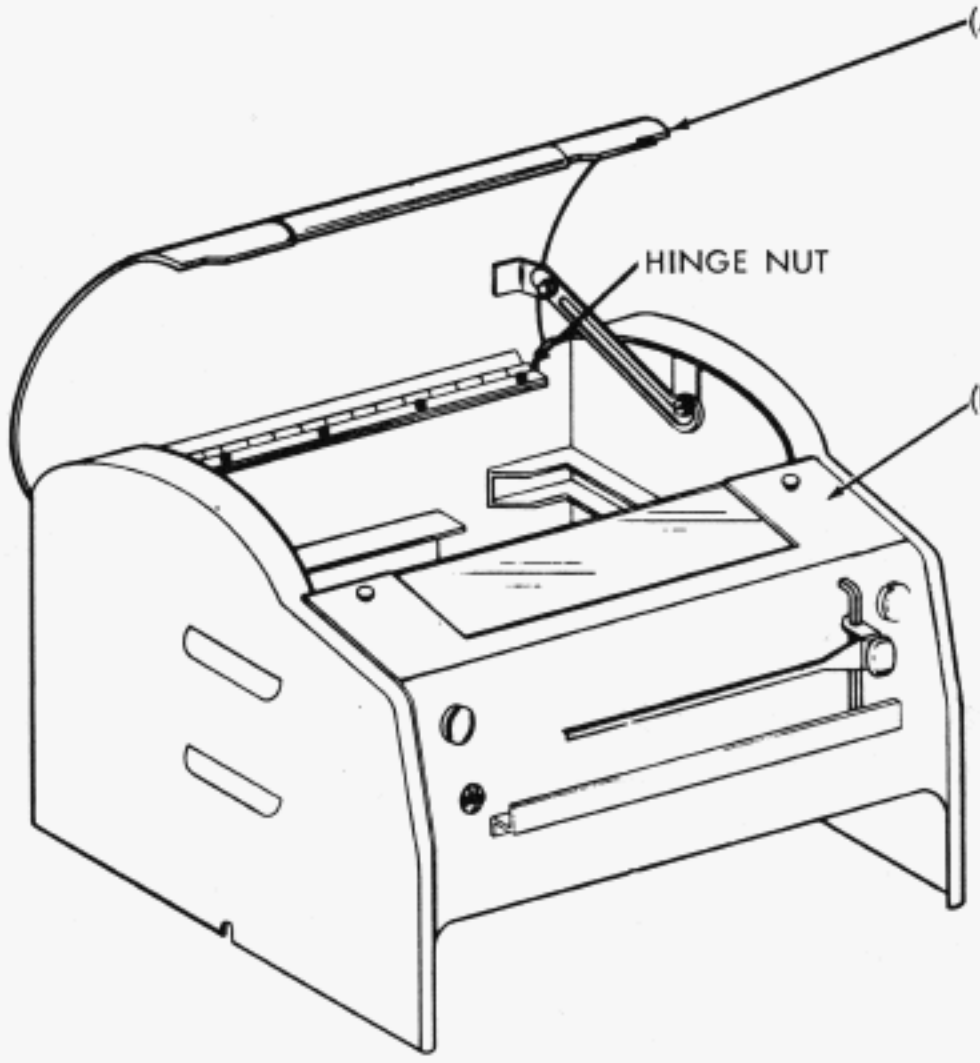

(A) DOME CENTERING
REQUIREMENT
1. THE DOME SHOULD BE CENTERED FROM SIDE TO SIDE ON THE CABINET.
2. FRONT EDGE OF DOME SHOULD FIT FLUSH TO FRONT EDGE OF CABINET.

TO ADJUST
POSITION THE DOME WITH THE SIX DOME HINGE NUTS LOOSENED.

(B) SMALL DOOR
REQUIREMENT
1. DOOR SHOULD BE FLUSH WITH TO 3/32 INCH ABOVE DOME.
2. DOOR SHOULD BE PARALLEL TO DOME WITHIN 3/32 INCH.

TO ADJUST
POSITION DOOR WITH THE FOUR HINGE EXTENSION NUTS LOOSENED.

FOR THE FOLLOWING ADJUSTMENTS SEE FIGURE 1-85
(C) PAPER GUIDE

*(D) WINDOW - REFER TO REQUIREMENT BELOW & FIG. 1-85

(E) INDICATOR AND COPY LAMPS
(F) COPYHOLDER LINE GUIDE

*(D) WINDOW (ALSO SEE FIGURE 1-85)
REQUIREMENT --- AS SMALL DOOR IS OPENED, IT SHALL CLEAR PROJECTION ON REAR LID BY MIN 0.005 INCH --- MAX 0.015 INCH
TO ADJUST --- POSITION THE WINDOW WITH ITS MOUNTING SCREWS (4) LOOSENED.

FIGURE 1-92 CABINET, SKIN TIGHT (TABLE OR RACK MOUNTING).

WALL MOUNTED PRINTER CABINET

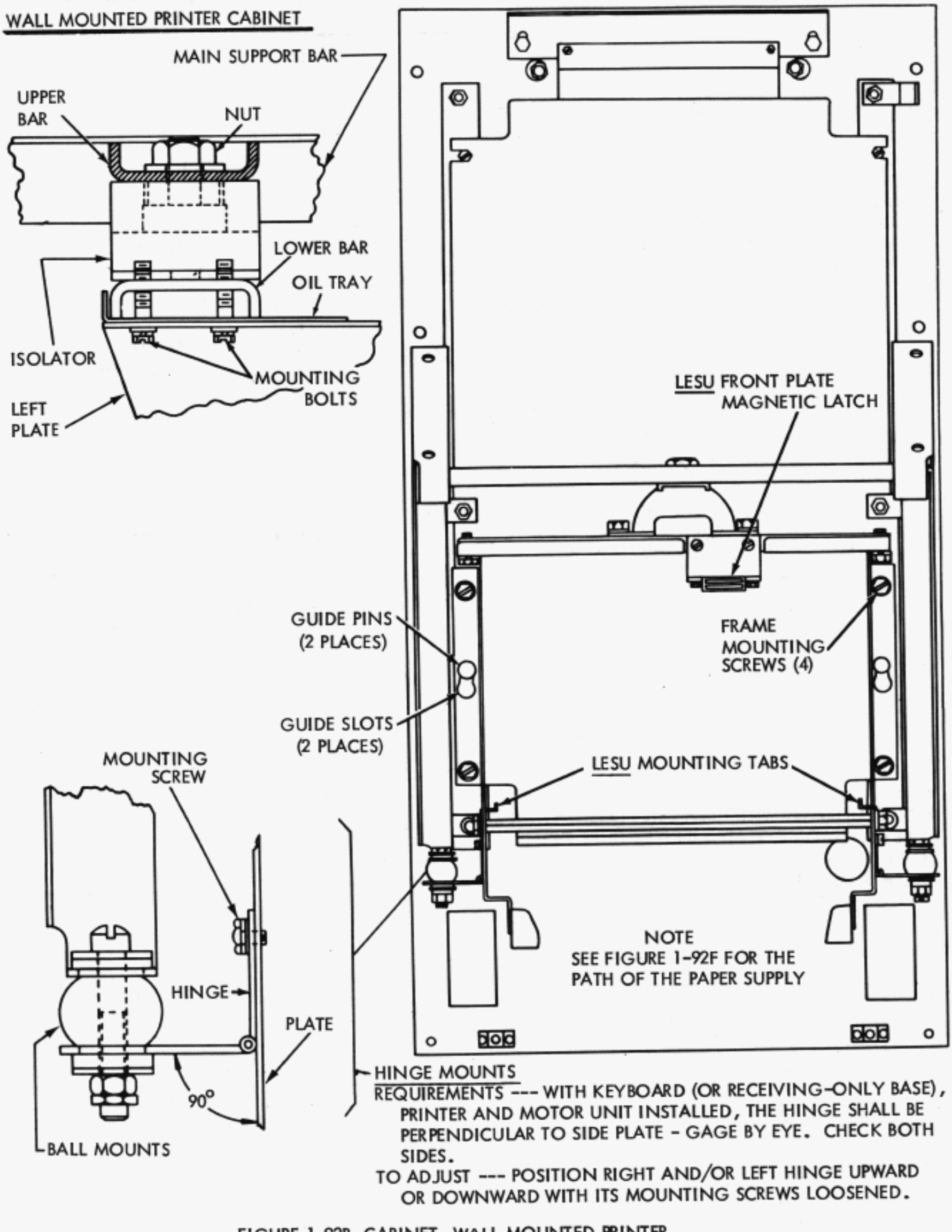

HINGE MOUNTS

REQUIREMENTS --- WITH KEYBOARD (OR RECEIVING-ONLY BASE), PRINTER AND MOTOR UNIT INSTALLED, THE HINGE SHALL BE PERPENDICULAR TO SIDE PLATE - GAGE BY EYE. CHECK BOTH SIDES.

TO ADJUST --- POSITION RIGHT AND/OR LEFT HINGE UPWARD OR DOWNWARD WITH ITS MOUNTING SCREWS LOOSENED.

FIGURE 1-92B CABINET, WALL MOUNTED PRINTER

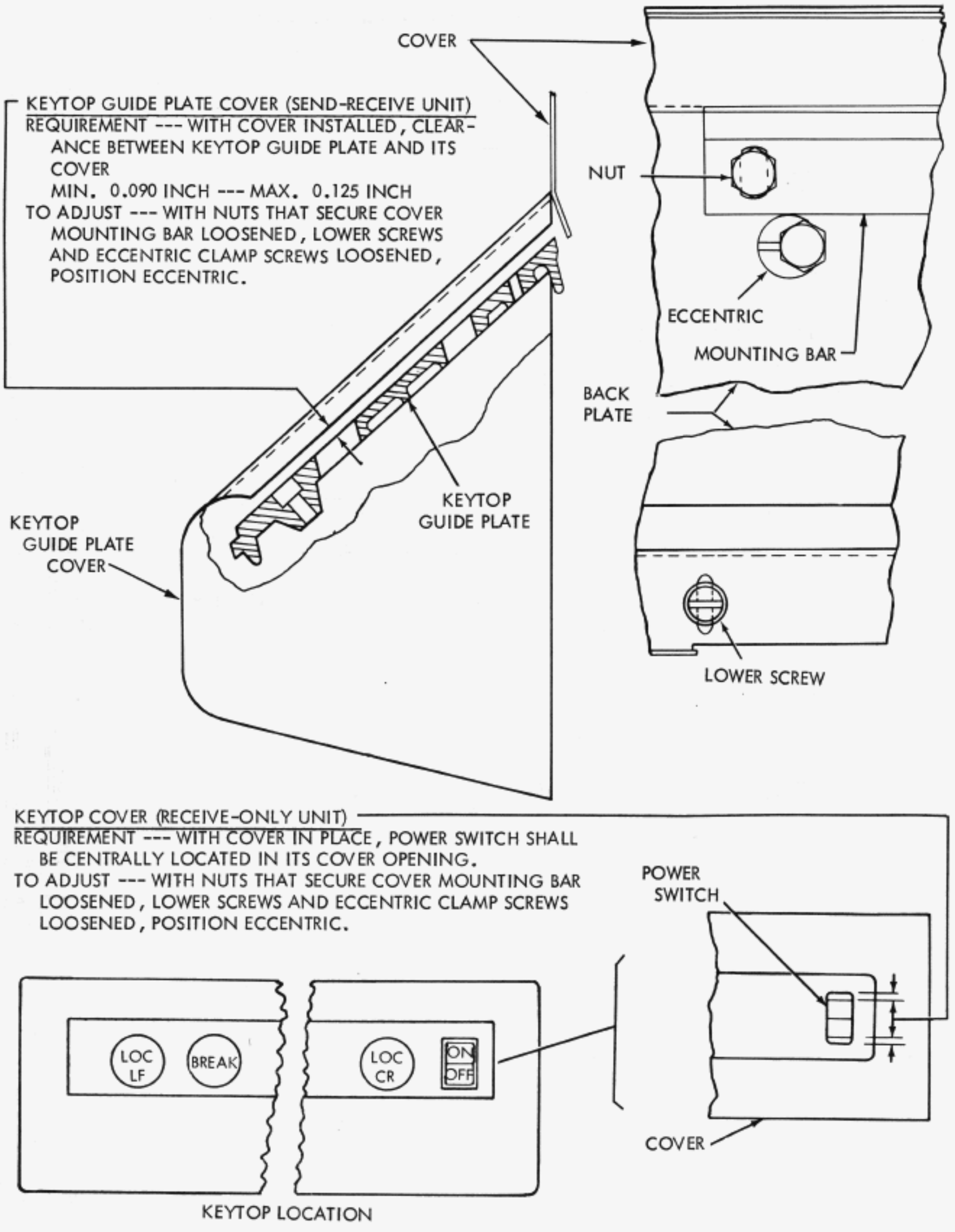

FIGURE 1-92C CABINET, WALL MOUNTED PRINTER

KEYTOP GUIDE AND COVER (SEND-RECEIVE UNITS)

REQUIREMENTS

(1) WITH COVER IN PLACE, CLEARANCE BETWEEN REAR EDGE OF KEYTOP GUIDE AND LIP OF COVER MIN. 0.090 INCH --- MAX. 0.0125 INCH

(2) CLEARANCE SHALL BE APPROXIMATELY EQUAL AT EACH END.

TO ADJUST

(1) WITH NUT WHICH SECURES LARGE CENTRAL MOUNT LOOSENED, POSITION UPPER SUPPORT BAR.

(2) WITH FOUR BOLTS THAT SECURE LOWER SUPPORT BAR LOOSENED, POSITION LOWER SUPPORT BAR.

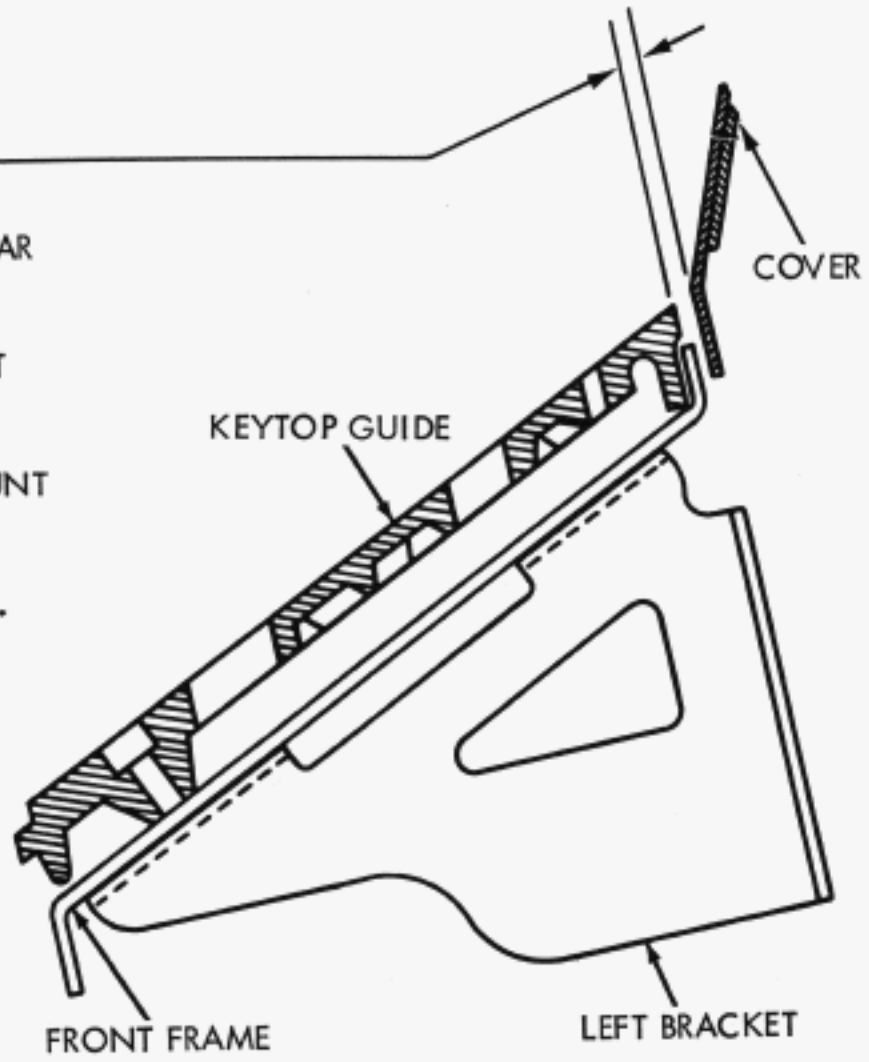

POWER SWITCH

REQUIREMENT --- WITH COVER PANEL IN PLACE, SURFACE OF SWITCH TOGGLE LEVER (1) IN ON POSITION (2) IN OFF POSITION SHALL BE FLUSH WITH TOP SURFACE OF COVER (GAGE BY EYE).

TO ADJUST --- WITH COVER REMOVED, POSITION SWITCH WITH ITS ADJUSTING SCREWS LOOSENED.

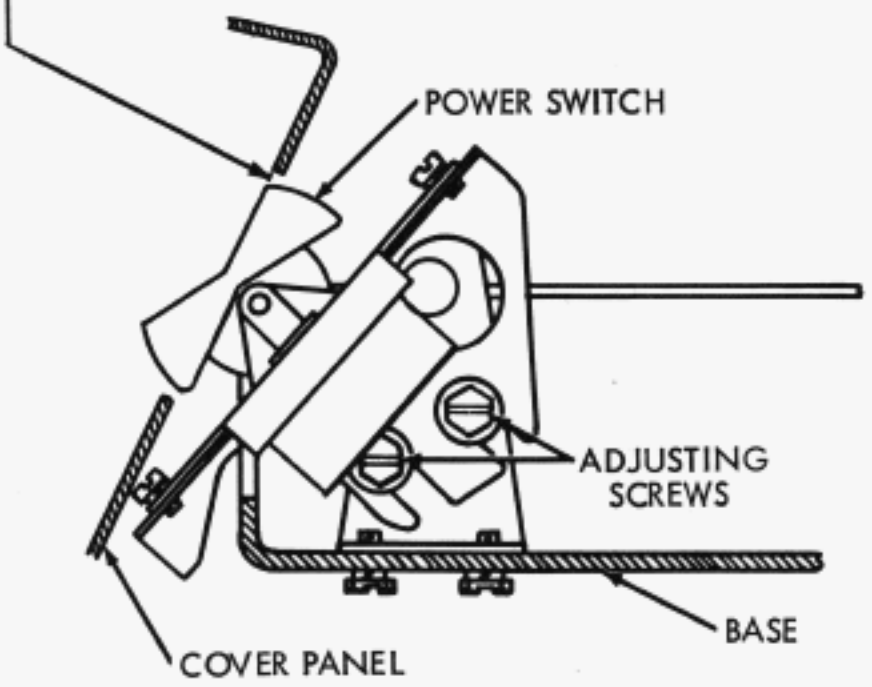

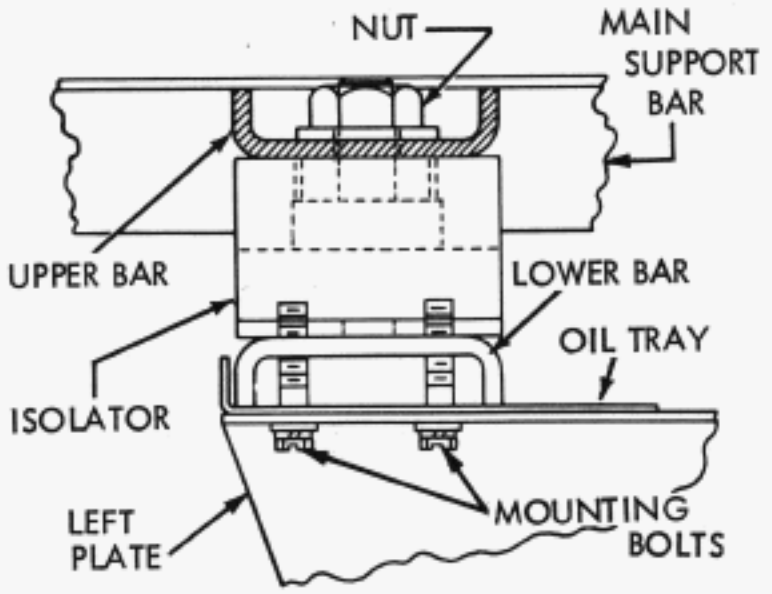

NOTE

SHOULD ADDITIONAL ADJUSTMENT BE NEEDED, LOOSEN BOLTS SECURING LARGE CENTRAL MOUNTING BRACKET, AND POSITION UPPER BAR.

FIGURE 1-92D CABINET, WALL MOUNTED PRINTER

(A) CARRIAGE RETURN/LINE FEED/AND BREAK LEVER (RECEIVE-ONLY UNIT)
REQUIREMENT --- WITH COVER IN PLACE, CLEARANCE BETWEEN TOP SURFACE OR RESPECTIVE LEVER ADJUSTING SCREW AND OUTER SURFACE OF COVER
MIN. 7/8 INCH --- MAX. 15/16 INCH
TO ADJUST --- REMOVE EACH KEYLEVER ASSEMBLY (3) FROM COVER (SEE FIG. 1-92C.) THEN REPLACE COVER AND POSITION EACH ADJUSTING SCREW THROUGH HOLE IN COVER (SLOT IN SCREW SHOULD BE HORIZONTAL AFTER ADJUSTING).

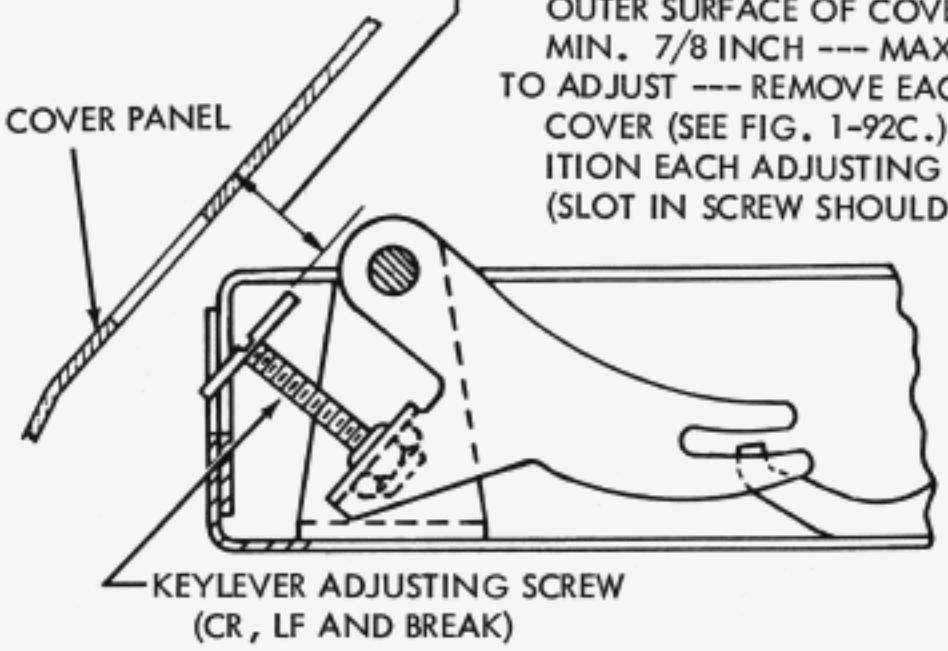

REMOVE KEYLEVER ASSEM.
(2 NUTS, L. W., & FLAT WASHER).

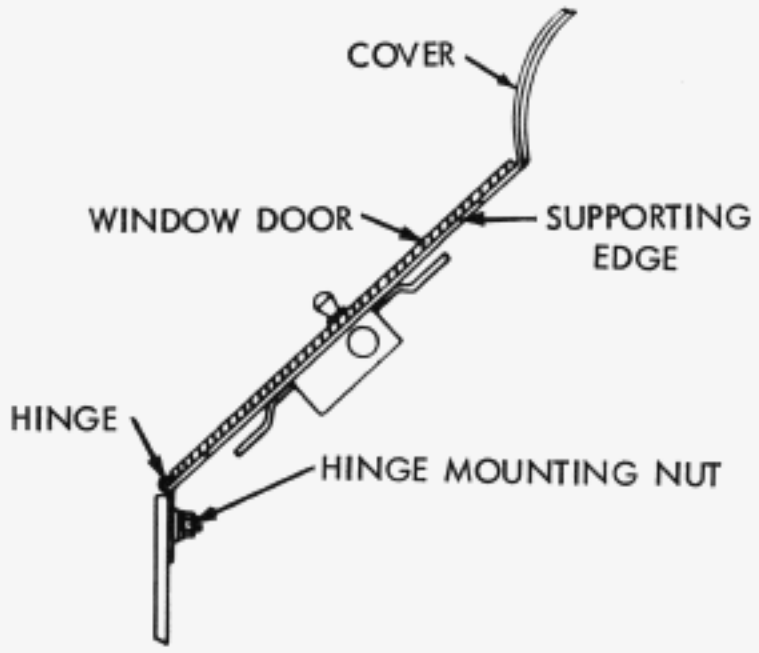

(B) WINDOW DOOR HINGE MOUNTS
REQUIREMENT --- WINDOW DOOR SHALL LIE FLAT ON RIGHT AND LEFT SUPPORTING EDGE OF CABINET — GAGE BY EYE.
TO ADJUST --- WITH HINGE MOUNTING NUTS (2) LOOSENED, POSITION THE DOOR.

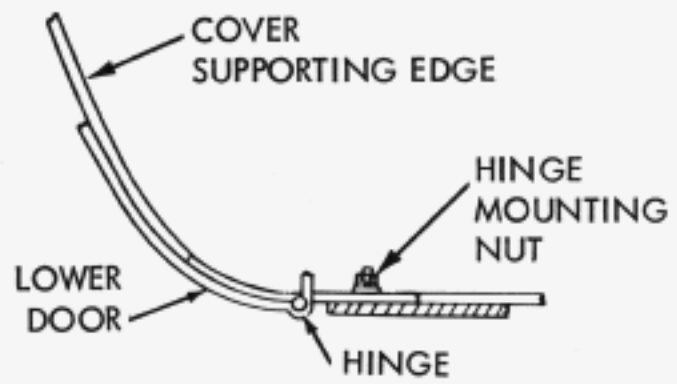

(C) LOWER DOOR HINGE MOUNTS
REQUIREMENT --- DOOR SHALL LIE FLAT AGAINST COVER.
TO ADJUST --- WITH EACH HINGE MOUNTING NUTS (2) LOOSENED, POSITION THE DOOR.

(D) LOWER DOOR LATCHES
REQUIREMENT --- DOOR SHALL LATCH FIRMLY AND LIE FLAT AGAINST COVER.
TO ADJUST --- WITH MAGNETIC LATCH MOUNTING SCREWS LOOSENED, POSITION THE LATCH.

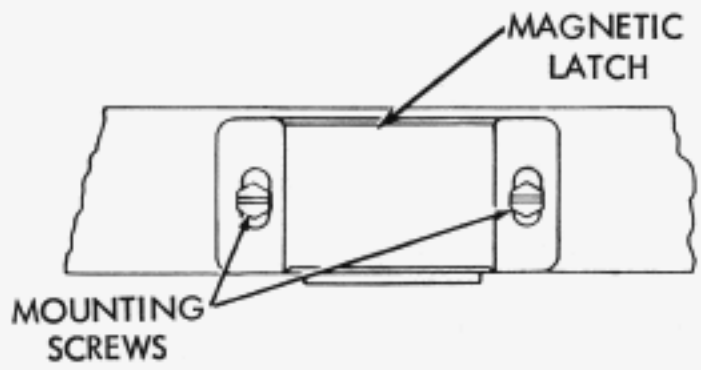

SMALL COPYHOLDER (WITH LINE GUIDE)
REQUIREMENT --- REFER TO FIGURE 1-85

FIGURE 1-92E CABINET, WALL MOUNTED PRINTER

WALL MOUNTED PRINTER

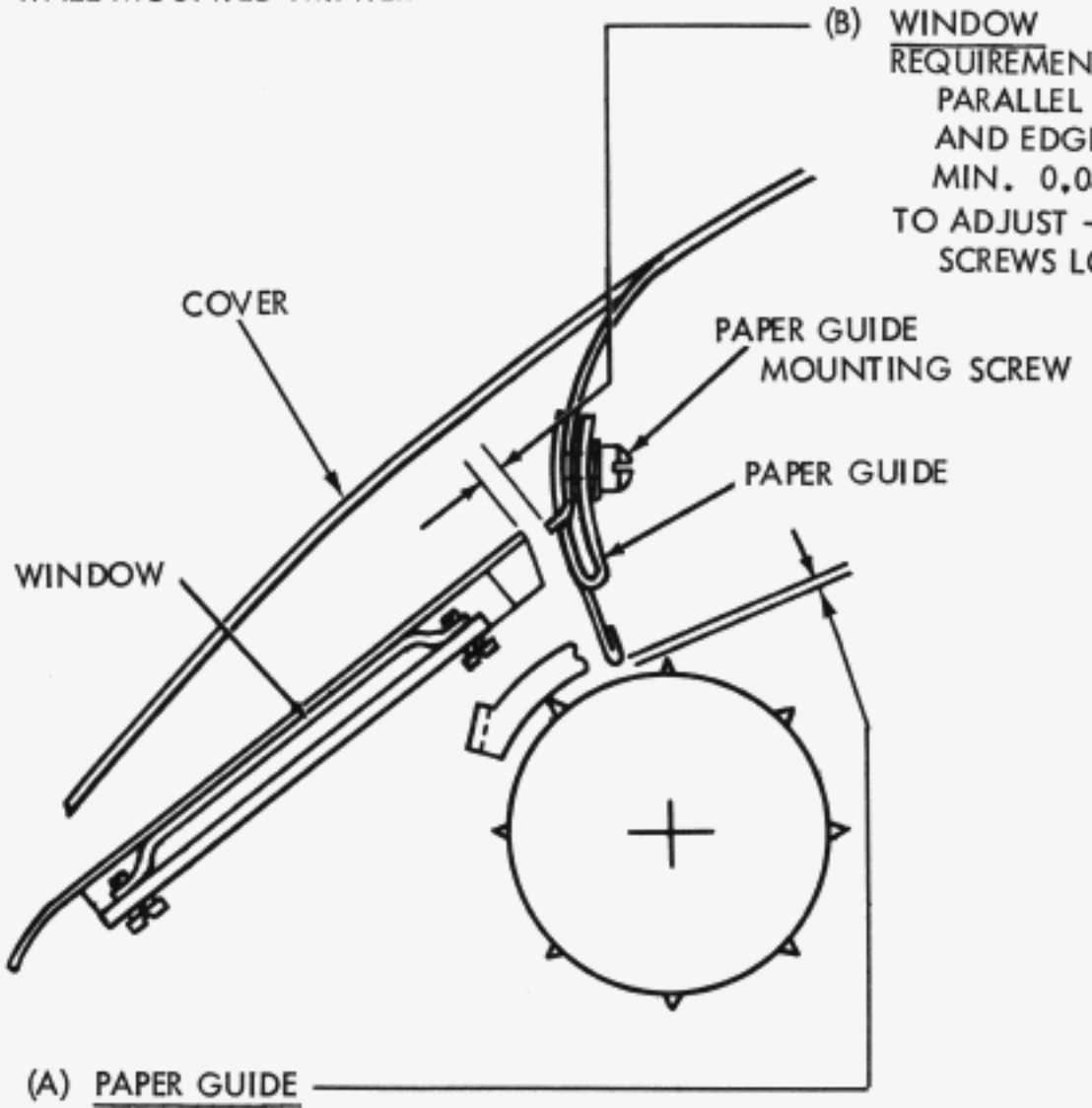

(B) WINDOW
REQUIREMENT --- WITH SMALL DOOR CLOSED, PARALLEL CLEARANCE BETWEEN PAPER GUIDE AND EDGE OF WINDOW.
MIN. 0.080 INCH --- MAX. 0.110 INCH
TO ADJUST --- WITH WINDOW CLAMP MOUNTING SCREWS LOOSENED (4), POSITION THE WINDOW.

(A) PAPER GUIDE
REQUIREMENT --- WITH TYPING UNIT IN PLACE, LARGE AND SMALL DOORS LATCHED, CLEARANCE BETWEEN PAPER GUIDE AND PLATEN MIN. 3/64 INCH --- MAX. 5/64 INCH.
TO ADJUST --- WITH PAPER GUIDE MOUNTING SCREWS LOOSENED, POSITION GUIDE PARALLEL TO PLATEN.

PATH OF PAPER

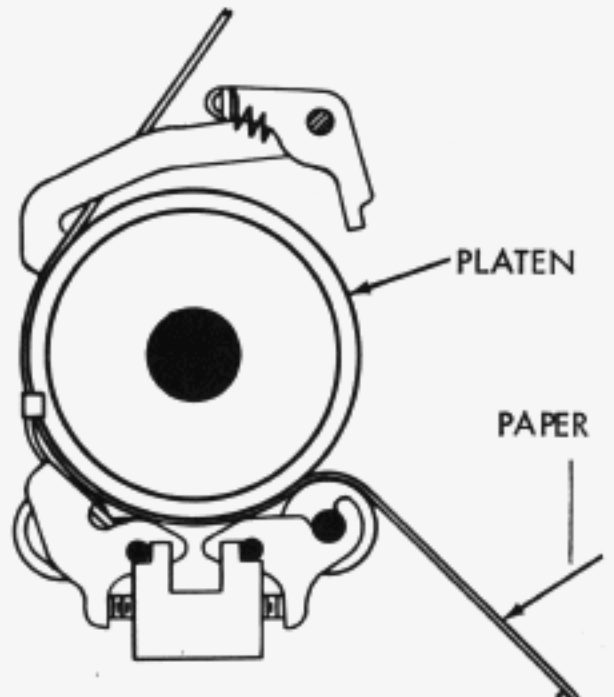

COPYLAMPS
REQUIREMENT --- WITH COVER AND LIGHT SHIELD IN PLACE, CLEARANCE BETWEEN LAMP ASSEMBLY AND COVER SHALL BE AT LEAST 1/16 INCH.
TO ADJUST --- BEND THE BRACKET.

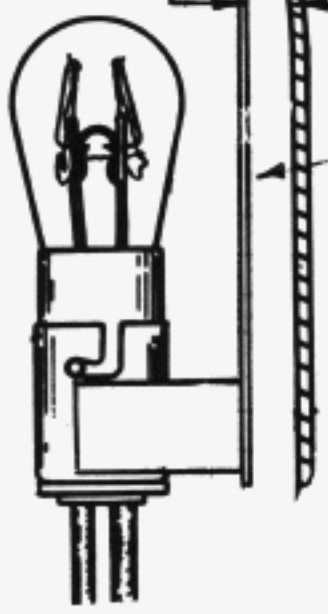

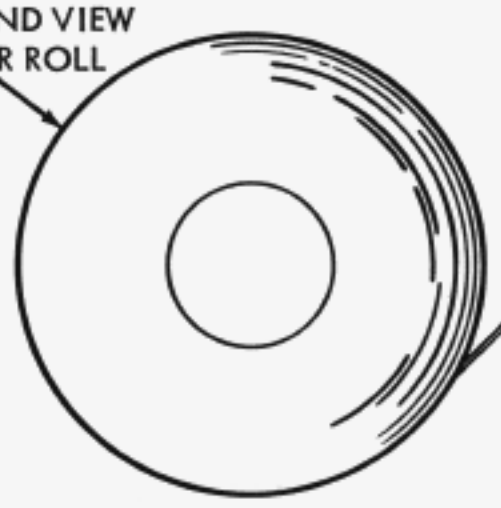

NOTE

SPECIFICATION 50,042S COVERS THE SELECTOR MAGNET DRIVER

FIGURE 1-92F CABINET, WALL MOUNTED PRINTER

7. ELECTRICAL SERVICE UNIT

(A) STOP ARMATURE SPRING TENSION

REQUIREMENT --- WITH STOP ARMATURE LATCHED ON INTERMEDIATE LEVER AND ARMATURE SPRING UNHOOKED. MIN 4-1/2 OZS --- MAX 6 OZS TO PULL SPRING TO INSTALLED LENGTH.

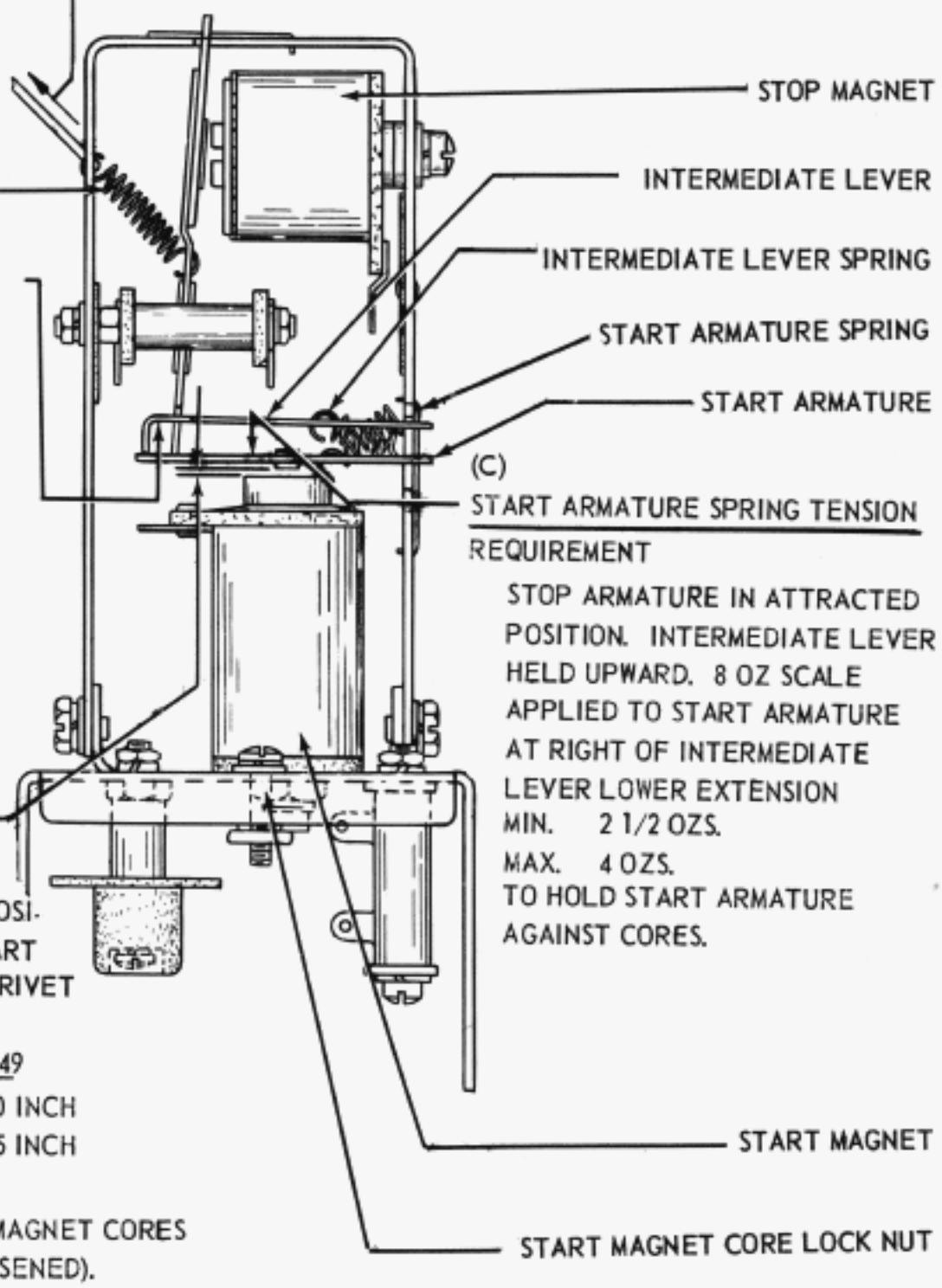

(B)

INTERMEDIATE LEVER SPRING TENSION

REQUIREMENT

WITH THE STOP AND START ARMATURES HELD AGAINST THEIR CORES, APPLY A GRAM SCALE TO THE UNDER SIDE OF THE INTERMEDIATE LEVER JUST TO THE RIGHT OF ITS DOWNWARD EXTENSION AND PUSH UPWARD

MIN. 10 GRAMS

MAX. 20 GRAMS

TO START THE LEVER MOVING UPWARD.

(C)

START ARMATURE SPRING TENSION

REQUIREMENT

STOP ARMATURE IN ATTRACTED POSITION. INTERMEDIATE LEVER HELD UPWARD. 8 OZ SCALE APPLIED TO START ARMATURE AT RIGHT OF INTERMEDIATE LEVER LOWER EXTENSION

MIN. 2 1/2 OZS.

MAX. 4 OZS.

TO HOLD START ARMATURE AGAINST CORES.

(D)

START MAGNET CORE

REQUIREMENT

STOP ARMATURE IN UNATTRACTED POSITION. CLEARANCE BETWEEN THE START MAGNET CORE AND ANTI-FREEZE RIVET ON THE START ARMATURE.

ARMATURE	151409	152849
MIN.	0.003 INCH	0.010 INCH
MAX.	0.010 INCH	0.015 INCH

TO ADJUST

ADVANCE OR RETARD THE START MAGNET CORES WITH SCREWDRIVER (LOCK NUT LOOSENED).

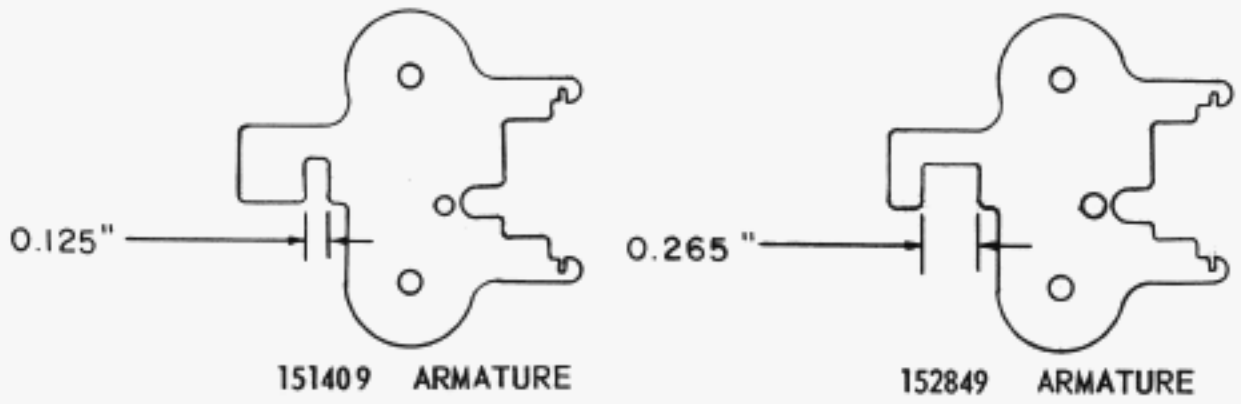

FIGURE 1-93. MOTOR CONTROL ASSEMBLY

8. PAPER AND RIBBON

a. To replenish the supply of friction feed paper, open the dome of the cabinet, move the paper release lever on the Typing Unit toward the rear, slide one of the spindle retainers toward rhe rear and remove the paper spindle. Insert the spindle in a fresh roll of paper and remount it so that the paper unwinds from underneath. Feed the paper over the paper straightener shaft (Figure 1-94) and fold the end of the paper backward to square it off. With the paper release lever toward the rear, start the paper feeding around the platen and then restore the release lever to its forward position. Depress the line feed wheel and continue to feed the paper upward. Do not disturb the ribbon. Make certain that the paper passes under the paper fingers which may be raised temporarily to facilitate the operation. It may be necessary to operate the release lever momentarily when finally straightening the paper.

b. The Sprocket feed typing unit is capable of handling as many as 12 copies of stapled continuous form stationery or as many as 6 copies of unstapled form stationery. For stapled stationery, place the form supply box on the floor behind the cabinet or on the shelf provided in the 152349 paper supply box and form-accumulating shelf. For unstapled stationery. place the form supply box on a platform not more than 18 inches below the paper admission slot or on the shelf provided in the 159349 paper supply box and form-accumulating shelf.

*c. To replace the ribbon, open the dome of the cabinet, raise the toggles on the ribbon spool shafts (Figure 1-95 to the vertical position and remove both spools. Engage the hook that is on the end of the new ribbon in the hub of the empty spool. Wind a few turns of the ribbon onto the empty spool to make sure that the reversing eyelet has been wound upon the spool. Place the spools on the ribbon spool shafts in such a manner that the ribon feeds from the rear of each spool without twisting. Turn each spool shaft slightly until the driving pins on the spool shafts engage the holes in the spools. Thread the ribbon forward around both ribbon rollers, through the slots in the ribbon reverse levers, and through the ribbon guide on the type box carriage. Make certain that ribbon remains in guide slots and that both reversing eyelets are between ribbon spools and reverse levers. Eliminate slack in ribbon.

*Indicates Change

9. GENERAL

a. The procedure to replenish the supply of paper in the Wall Mounted Printer Set is accomplished in a similar manner as outlined above. However, the path of paper is extended; since, the paper supply roll is located near the bottom of the cabinet. Refer to Figure 1-92F

b. Route the paper from the roll upward through its guide slot accross the paper straightener shaft and into the platen. The typed copy may then be handled as outlined in Paragraph 8a. The respective messages may be torn off from time to time or collected in a continuous roll by routing the paper upward and over a second paper streightener shaft and downward through a slot in the back of the cabinet to a paper winder (not furnished) at the bottom of the cabinet.

c. Access to the ribbon spools and the replacement of the ribbon is handled in manner similar to Paragraph 8c above and Figure 1-95.

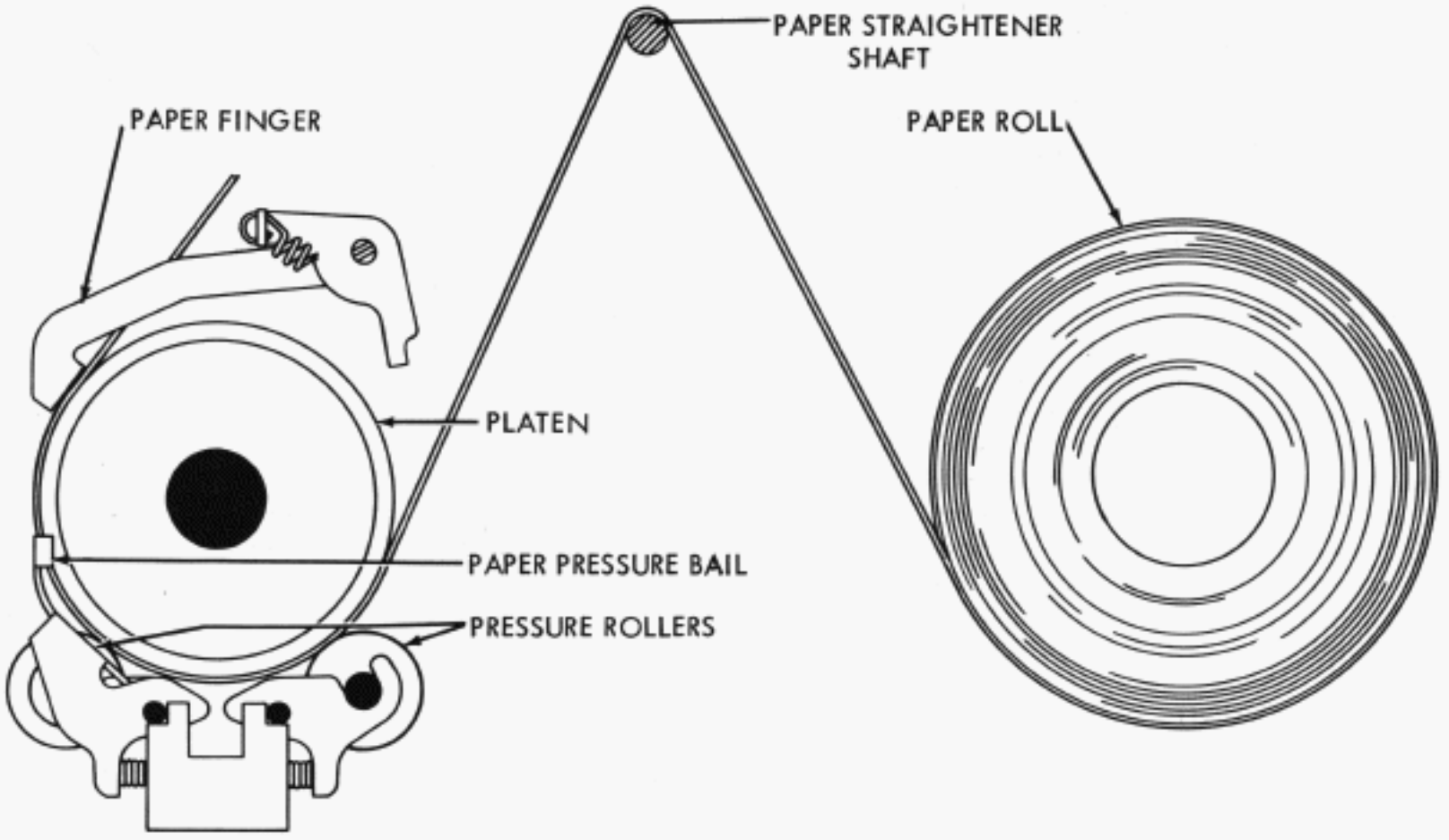

FIGURE 1-94. PATH OF PAPER

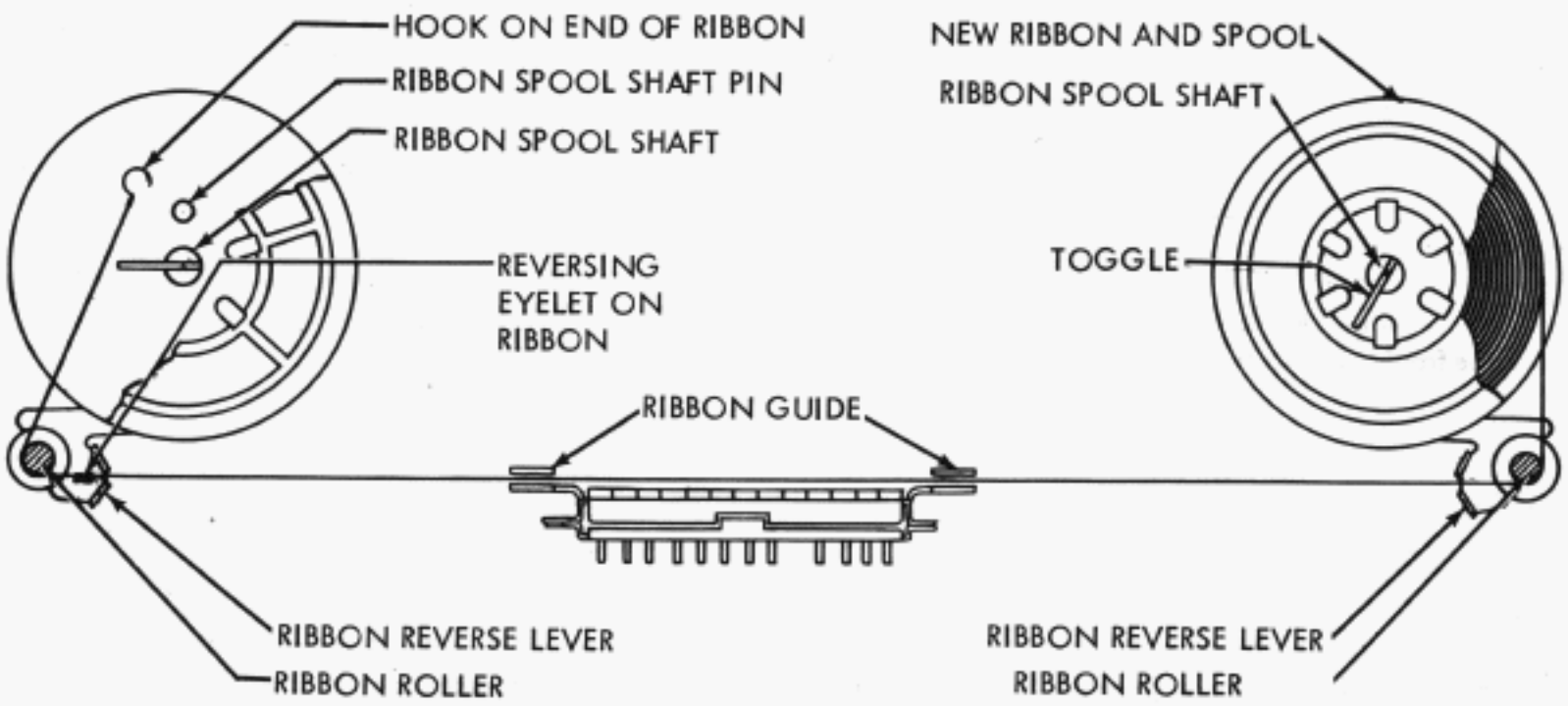

FIGURE 1-95. PATH OF RIBBON

9. TOOLS

For a listing of tools required to maintain the Model 28 Printer Set, Refer to Teletype Bulletin 1124B.

10. DISASSEMBLY AND REASSEMBLY. (For illustration of parts referred to herin, see Teletype Model 28 Printer Parts bulletin).

NOTE

If a part that is mounted on shims is to be removed, the number of shims used at each of its mounting screws should be noted so that the same shim pile-up can be replaced when the part is remounted. Retaining rings (Tru-arcs) are of spring steel and have a tendency to release suddenly. Loss of these can be minimized as follows: Hold the tru-arc with your left hand to prevent it from rotating. Place the blade of a suitable screwdriver in one of the slots of the tru-arc. Rotate the screwdriver in a direction to increase diameter of tru-arc. Tru-arc will come off easily without flying.

*a. TYPING UNIT. To remove the typing unit from the keyboard or base proceed as follows: Remove the four 151678 screws that secure the typing unit to the keyboard or base. Remove the 152466 cable plug connector (s) from the right side frame. Lift the typing unit from the keyboard or base.

(1) TYPE BOX

(a) To remove the type box, proceed as follows:

*1. Trip the 150075 type box latch to the right.

2. Lift the right end of the type box upward to an angle of approximately 45 degrees and pull the type box toward the right to disengage it from the left hand bearing stud.

(b) To disassemble type box and replace a type pallet, proceed as follows:

1. Remove both screws and nuts that secure the front plate to the rear plate assembly. Separate the two plates.

2. Remove the spring from the pallet by compressing the spring slightly and pulling the formed end out of the slot in the pallet.

NOTE

This spring should be discarded once it has been removed from its assembly.

3. Replace pallet (omit this step if replacing spring only).

4. Install new pallet spring making sure that the formed end of the spring extends through the slot in the pallet.

5. Line up the front plate with the rear plate assembly and draw the two plates together until the head of the pallet leaves the rear plate by approximately 1/16". This may be accomplished by using two 6-40 screws (at least 11/32" long) and nuts in place of the screws and nuts removed in step 2 and tightening them only enough to hold the pallets as specified above. (Do not clamp the plates together until all pallets have been moved into their correct position).

6. Manipulate the pallets until they fall into their respective openings in the front plate and press plates together.

7. Replace screws and nuts used in step 5 with screws and nuts removed in step 1.

(c) To reinstall type box, reverse the procedure used in removing it.

*CAUTION

TO AVOID SPRINGING THE TYPEBOX LATCH, THE TYPEBOX SHOULD BE FIRMLY SEATED ON THE BEARING STUDS AND THE POINT OF THE LATCH SHOULD BE PLACED IN THE NOTCH OF THE TYPEBOX PLATE BEFORE MOVING THE LATCH TO ITS LOCKED POSITION.

(2) PRINTING CARRIAGE

(a) To remove the printing carriage, proceed as follows:

*1. Loosen the two 151152 screws in the 150230 printing-carriage clamp plate and disengage the carriage from the upper draw-wire rope.

2. Move the carriage to the left of its track and tilt the lower part forward to disengage the rollers from the track.

3. The disassembly of the printing carriage is shown in bulletin 1149B.

(b) To reinstall the carriage, reverse the procedure used in removing it.

1. Make certain that the 150068 printing arm is correctly re-engaged with the 150598 printing track.

*2. Position the carriage clamp on the upper draw-wire rope for correct printing carriage position as specified in figure 1-57.

(3) TYPE BOX CARRIAGE

(a) To remove the type box carriage, proceed as follows:

1. Move the type box carriage to its extreme right hand position.

2. Hold the 152548 and 152255 code bar shift bars in the marking position and rotate the main shaft so that the type box is in its uppermost position.

*3. Remove the ribbon from the ribbon guide.

*4. Remove the 119652 retainer ring from the stud in the right hand end of the 152503 type box carriage link and disengage the link from the carriage.

* 5. Hold the 153810 ribbon guide forward and the 150311 right ribbon reverse lever back and pull the carriage toward the right to disengage it from the carriage track. For disassembly see 1149B.

(b) To reinstall the carriage, reverse the proceedure used in removing it. (See Fig. 1-56)

(4) FRONT PLATE

(a) To remove the front plate, proceed as follows:

1. Remove the Typing Unit from the Base.

*2. Manually move the type box carriage to the extreme right. Select any character in the bottom row of the typebox and rotate main shaft until typebox carriage is in its uppermost position.

*3. Remove the 119652 retainer ring from the 152503 type box carriage link right hand stud and disengage the link from the carriage. (See instructions for removing the link retainer in paragraph 10.a.(3).

*4. Remove the two 151659 or 152893 and 153841 screws, which secure the 150245 main bail drive bracket to the 150365 rocker shaft.

*5. Remove the 150202 spacing shaft gear.

*6. Remove the four 151606 screws which secure the front plate assembly to the typing unit side frames.

*7. Pull the front plate assembly forward to disengage it from its connecting parts in the Typing Unit.

*8. The disassembly of the front plate is shown in 1149B.

(b) To reinstall the front plate assembly, reverse the procedure used in removing it.

*1. Make certain that the 150770 and 150771 code bar bell cranks, the 152596 letters-figures shift slide, the 152522 reversing slide shift lever, the 150438 automatic C.R. - L.F. bell crank, if so equipped, and the 152545 carriage return lever extension are properly engaged with their mating parts before tightening the front plate mounting screws.

2. Replace the 150202 spacing shaft gear. See figure 1-36 for adjustment on phasing the spacing gears.

(5) STUNT BOX

(a) To remove the stunt box, proceed as follows:

1. Remove the Typing Unit from the Base.

2. Remove the 151627 rear tie bar from Typing Unit side frames.

3. Remove the 150915 or 155060 line feed function pawl stripper from the 150424 or 155061 stripper blade.

4. Remove the 151657 or 1010 single-double line feed lever screw and disengage the lever from the notch in the stripper blade.

5. Hold the stripper blade toward the right side of the Typing Unit and unhook the 152541 stripper blade left hand arm from the blade. (LP 3, 5, 7, only).

6. Pull the stripper blade toward the left side of the Typing Unit to disengage the stri pper blade from the 152542 right hand arm and remove the stripper blade from the Typing Unit. (LP 3, 5, 7, only).

7. Remove the 151692 screws which secure the stunt box assembly in the Typing Unit.

8. Remove the 151637 screw from the 153291 cam shaft drive arm, and slide the drive arm to left out of engagement with the 153300 stripper blade drive arm. (On LP6 and up.)

9. Lift the stunt box assembly upward to disengage it from its locating brackets and pull toward the rear to disengage all code bar forks from the code bars. Remove the contact assembly and cable clamp, if present, from the stunt box. Remove the stunt box.

10. Disassembly of the stunt box is shown in 1149B.

*11. To replace the contact arm spring in a stunt box switch proceed as follows:

a. Remove the two 151689 screws that hold the contact plate to the block.

b. Carefully unsolder the wire from the 157889 contact arm spring. (It is not necessary to unsolder the contact arm spring wire from switches having the 172591 contact spring).

c. Remove the contact plate assembly from the contact block.

d. Remove the contact arm(s) from the contact plate assembly.

e. Slip the 157889 contact arm spring from the contact plate on earlier designs. On later design, slip the 172591 contact arm spring out of engagement with the center lug of the section being replaced.

f. Place the new spring in position on the contact plate.

g. Before mounting the contact plate on the block make sure the end of the spring rests on top of the formed-over portion of the contact clip. There should be some clearance between the low end of the spring (front) and the upper edge of the contact arm to avoid interference with the normal movement of the contact arm.

h. Replace the contact plate assembly, with the contact arms removed, into the contact block. Mount the contact block in the required location with the two 151689 screws friction tight.

i. Carefully resolder any leads that may have been removed, being careful to avoid overheating.

j. Insert the pointed end of the contact arm, notch downward, between the bent up end of the spring and the formed-over portion of the contact clip. Push the arm into its operating position in the contact block.

k. Before tightening the contact plate screws, see figure 1-75 for requirements.

(b) To reinstall the stunt box assembly:

1. Push it forward in its guide rails to within 1/8 inch of its final position.

2. Manually disengage the function pawls from their function bars and push the stunt box assembly forward and downward until it is latched in place on its locating brackets.

*3. Check that the FIGS-LTRS code bar fork properly engages the post on its code bar.

*4. Replace the stunt box mounting screws, receptacle and selector magnet wires.

*(6) FUNCTION BAR, PAWL, LEVER AND LEVER SPRING PLATE OR LATCH

(a) To remove a function bar, proceed as follows:

1. Remove the stunt box from the Typing Unit - See paragraph 10.a.(5).

2. Unhook the 4703 function bar spring.

3. Hold the function bar toward the rear of the stunt box and disengage its function pawl from the function bar.

4. Pull the function bar toward the front to remove it from the stunt box.

(b) To remove a function pawl after the function bar has been removed:

1. Remove the pawl spring.

2. Hold associated function lever back.

3. Remove the pawl from top of stunt box.

(c) To remove a function lever after the function bar and function pawl have been removed:

1. Remove the 152889 shaft retainer plate.

2. Remove the 150547 shaft nearest the front of the stunt box.

3. Unhook spring from function lever and remove the lever through top of stunt box.

4. Disassembly of the stunt box is shown in 1149B.

*(d) To remove a function lever spring plate or latch after the function bar, function pawl and function lever have been removed:

1. Loosen the 5740 screws that fasten the three 150689 guide blocks to the lower side of the 152652 guide bar.

2. Remove the 90517 spring from the 152660 spring plate or 154613 latch.

3. Pull downward on the function-lever spring plate or latch to snap it out of engagement with the retainer shaft.

(e) To replace the mechanisms of paragraph (6) reverse the disassembly procedure.

(7) CODE BARS

*(a) To unblock the 153320 suppression code bar, loosen the 151152 screw that mounts the 154650 code bar clip and the 150293 retaining plate to the 152572 left hand code bar guide bracket and rotate the 154650 code bar clip up out of engagement with the 153320 suppression code bar. Tighten the 151152 screw.

*(b) To remove the code bar assembly, proceed as follows:

1. Remove the Typing Unit from the Base.

2. Remove the stunt box assembly. See paragraph 10.a.(5).

3. Remove the front plate assembly. See paragraph 10.a.(4).

4. Remove the 151657 screws and 2191 lock washers which secure the code bar assembly to the side frame.

*5. Remove the 150301 code bar shift bar retainer plate from 152576 right hand code bar guide bracket.

6. Unblock the suppression code bar as in (a) above. Remove the 152548 and 152255 code bar shift bars and 152257 springs from the code bars and pull the code bar assembly forward and to the left.

7. Disassembly of the code bars is shown in 1149B.

*(c) To reinstall the code bar assembly, reverse the procedure used in removing it, except do not tighten the mounting screws.

*1. Hook the short extension of the 152257 spring in the spring hole of the 152256 code bar. The short extension of the spring should be hooked from the bottom of the code bar and the long extension should be hooked over the top of the code bar shift bar.

*2. Loosen the 151630 code bar assembly tie bar screws and hold the code bar guide brackets back and downward firmly against their locating surfaces on the side frame and tighten the four mounting screws.

3. Tighten the two tie bar screws.

(8) MAIN SHAFT

(a) To remove the main shaft, proceed as follows:

1. Remove the Typing Unit from the Base.

2. Remove the selector cam-clutch assembly. See paragraph 10.a.(13).

3. Set the Typing Unit upside down.

4. Return the carriage to its left-hand position.

*5. Remove the 151686 screw that secures the 150673 spacing shaft in the 150668 spacing collar.

6. Remove the spacing shaft with gear.

7. Remove the 151686 screw that secures the 152454 or 153823 collar and the 152455 or 153824 clamp from right end of main shaft. Remove the 152573 main shaft right hand bearing retainer plate.

8. Remove the 150010 retainer plate at the 150046 clutch bearing and remove the 150244 link.

9. Remove the two 151630 screws from the 152537 main shaft left hand bearing clamp.

*10. Unhook the 74701 or 135716, 74712 and 70388 springs from the trip levers and latch levers associated with all clutches. Position the code bar clutch so that the low part of the clutch cam clears the spring arm on the cam follower. Unhook the 74712 code bar clutch cam follower spring.

11. Remove the 153300 function clutch arm by removing the two 151630 screws and 119652 Retainer Ring if present.

12. Unhook the 154688 spring from the 153573 function bar reset bail.

13. Move the main shaft assembly toward the left to disengage the code bar clutch and function clutch links from their connecting pins.

14. Lift the left end of the shaft assembly out of the side frame and position the shaft so that the function clutch link passes the suppression assembly bracket and remove the shaft assembly from the typing unit.

15. When assembling the clutches that have cams and disks marked "O" for identification, the marked side of the parts should face away from the clutch side of the assembly. The function and code bar clutches should have their driving links assembled so that the longer end of the hub faces away from the clutch side of the assembly.

16. Disassembly of the main shaft and clutches is shown in 1149B.

*(b) To re-install the shaft assembly, reverse the procedure used in removing it. The line feed clutch spur gear should be positioned with its flat side toward the line feed clutch spacer and with the indentation in the gear toward the special washer between the gear and the main shaft ball bearing.

(c) To phase the spacing gears, see figures 1-36 and 1-37 respectively.

(d) Remake the stripper blade drive cam position adjustment (Figure 1-68).

(9) UPPER DRAW WIRE ROPE

(a) To remove the upper draw wire rope, proceed as follows:

1. Return the carriage to the left hand position.

*2. Loosen the 112626 nut on the front end of the 150197 spring drum stud. Operate the 150237

ratchet escapement lever to unwind the 74272 carriage return spring.

*3. Remove the 150712 upper draw wire rope from the T50230 clamp plate on the printing carriage, and the 152521 clamp on the 150728 oscillating rail slide.

*4. Loosen the 151618 clamp screw that secures the upper draw wire rope to the 150827 spring drum, and remove the wire rope from the drum.

5. Remove the 151618 or 151658 screw in the spacing drum that secures the ends of the wire rope, and remove the rope from the drum.

6. Disassembly of the wire rope, spring drum and spacing drum is shown in 1149B.

(b) To replace the upper draw wire rope, reverse the procedure used in removing it.

(10) LOWER DRAW WIRE ROPE

(a) To remove the lower draw wire rope, proceed as follows:

1. Remove the 151618 or 151658 screw that secures the 150225 lower draw wire rope to the 152587 or 154627 spacing drum, and remove the end of the rope from the drum.

*2. Loosen the 151637 screws that secure the 150796 margin indicator cam disk on the spring drum and position the disk to expose the lower draw wire rope mounting screw.

3. Remove the 151618 lower draw wire rope screw and move the rope from the spring drum.

*4. Loosen the 151632 screws in the 150800 pulley bearing studs that mount 150224 draw wire rope pulleys and move the studs toward the center of the typing unit.

5. Disassembly of the lower draw wire rope is shown in 1149B.

(b) To replace the wire rope, reverse the procedure used in removing it.

*1. Make certain that the lower draw wire rope is in front of the upper draw wire rope in the track around the drums.

2. Adjust the position of the type box, the printing carriage, and the wire rope tension as specified in the figures 1-49, 1-53, and 1-56.

(11) PLATEN (FRICTION FEED)

(a) To remove the platen, proceed as follows:

1. Remove the 150715 line feed spur gear.

2. Remove the 150719 and 150720 platen bearing retainers.

*3. Remove the 152832 paper straightener shaft.

4. Hold off the 150900 detent and lift the platen out of the side frame.

5. Disassembly of the platen is shown in 1149B.

(b) To replace the platen, reverse the procedure used in removing it.

1. When replacing each platen bearing retainer, put its upper screw in first. Leave the screw slightly loose. Press the lower end of the retainer downward and hook it into the elongated hole in the side frame. Replace the lower screw. Tighten both screws.

(12) PLATEN (SPROCKET FEED)

(a) To remove the platen proceed as follows:

1. Remove the paper fingers or guide bracket assembly.

2. Remove the spur gear from left end.

3. Remove the 150719 and 150720 platen bearing retainers.

*4. Hold off the 153676 detent bail and remove the platen.

5. Remove sprocket hub assembly from platen assembly.

6. Insert the 153673 shaft tool into the hub and fasten it with the 151346 screw.

7. Remove the 157286 clamp and 153699 cam from the assembly.

*8. Insert the hub into the 153797 retaining tool.

NOTE

These tools must be used when disassembling the 153700 platen hub in order to hold the spring loaded pins in place when the feed cam is replaced.

*9. To replace a pin, rotate the hub assembly within the retaining tool with a tommy wrench inserted in the shaft tool until the desired pin is opposite the notch in the retaining tool. A pin may then be removed or replaced.

NOTE

While rotating the hub, the notch must be covered to pre-

vent the pins from being released.

*10. Pack with grease.

*11. Disassembly of platen shown in 1149B.

*(b) To replace the platen, reverse the procedure used in removing it. In replacing the 153686 right sleeve bearing, the chamfer side or side marked "O" must face the end of the shaft and the wide part placed toward the front of the unit. When replacing each platen bearing retainer, put its upper screw in first. Leave the screw slightly loose. Press the lower end of the retainer downward and hook it into the elongated hole in the side frame. Replace the lower screw. Tighten both screws.

(13) SELECTOR CAM-CLUTCH

(a) To remove the selector cam-clutch, proceed as follows.

*1. Lift and move to rear the 152410 push lever reset bail cam follower from its cam and latch it in its raised position on the push lever guide. Lift the selector levers and the marking lock lever by moving the marking lock lever forward until the armature drops behind it.

*2. Remove the 151642 screw which mounts the 150001 selector clutch drum and position the cam clutch so that the stop lug on the 150028 clutch-cam disk is in the uppermost position.

*3. Place 152410 or 158903 pushlever-reset bail in raised position. Hold 152432 or 158928 stop arm and 152405 or 158902 marking lock lever to left, grasp cam-clutch by cam-disk (not by drum) and pull forward while rotating cam-clutch slowly. Cam-clutch should come off easily. Do not force it.

4. Disassembly of the selector cam clutch is shown in 1149B.

(b) To replace the cam-clutch assembly, reverse the procedure used in removing it except:

1. As the cam-clutch approaches its fully installed position, move the trip shaft lever and the cam-clutch latch lever so that they ride on their respective cams.

2. Restore the push lever reset bail and the armature to their operating position.

(14) SELECTOR MECHANISM

(a) To remove the selector mechanism, proceed as follows:

1. In order to remove the selector mechanism from the Typing Unit the cam-clutch assembly must be removed. See paragraph 10.a.(13).

*2. Remove the 151658 screw that secures the selector mechanism to the 152546 intermediate bracket on the code bar positioning mechanism.

3. Remove from the selector mechanism the 150563 spring which connects with the 152640 common transfer lever on the code bar positioning mechanism.

4. Remove the remaining three 151630 selector mounting screws and lift the selector from the main shaft bearing housing.

5. Disassembly of the selector mechanism is shown in 1149B.

(b) To replace the selector mechanism, reverse the procedure used in removing it.

(c) For readjustment of selector mechanism see the adjusting figures 1-17 to 1-19 and 1-21 to 1-23.

(15) CODE BAR POSITIONING MECHANISM

(a) To remove the code bar positioning mechanism, proceed as follows:

*1. Remove from the selector the 150563 spring attached to the common transfer lever and restore any operating push levers to the spacing position by raising the 152410 pushlever reset bail.

*2. Loosen the 151721 clamp screw on the 150447 shift lever drive arm, and remove the two screws which mount the mechanism - the 151630 to the side frame, and the 151658 to the 152400 selector mounting plate.

3. Manipulate the 152635 to 152640 transfer levers and 152548 or 152255 code bar shift bars while gently twisting the mechanism so as to slide the mechanism off the code bar shift bars.

4. Disassembly of the code bar positioning mechanism is shown in 1149B.

(b) To replace the mechanism on the Typing Unit, reverse the procedure used in removing it.

1. With the main shaft in the stop position, push the code bar shift bars to the marking position (left front view). Manipulate the code bar shift bars and transfer levers so that the shift bars line up with their respective slots in the 150525 bracket, and slide the shift bars through the slots, one at a time (leave the bottom slot vacant).

*(16) RANGE FINDER ASSEMBLY

(a) To remove the range finder assembly, proceed as follows:

1. Remove the two 151657 screws and the 3598 nut that mount the 155096 range finder plate to the

152400 selector-mounting plate.

2. Move the 152438 stop arm bail forward so that it disengages from the 161342 start lever and clears the selector clutch disk, while rocking the range finder assembly back and forth as it is removed.

3. Disassembly of the range finder assembly is shown in 1149B.

(b) To replace the range finder mechanism, reverse the disassembly procedure. On units equipped with a 152897 bail lever guide do not tighten the nut until bail lever guide adjustment (fig. 4-24) has been checked.

*(17) SELECTOR MAGNET ASSEMBLY

(a) To remove the selector magnet assembly, proceed as follows:

1. Remove the two 151657 screws and 3598 nut which mount the range finder to the selector.

*2. Remove the 152468 selector-magnet cable from the 1028 coil terminal screws.

3. Remove the two 151658 magnet assembly mounting screws and lift the assembly out.

4. Disassembly of the selector magnet assembly is shown in 1149B.

b. KEYBOARD (EARLIER DESIGN) - Remove the four 151549 screws at each corner of the Keyboard that secure the Keyboard to the cradle. Remove the 152465 plug from its receptacle at the left rear corner of the base. Lift the keyboard from the cradle.

(1) SIGNAL GENERATOR

(a) To remove the signal generator from the Keyboard, proceed as follows:

*1. Remove signal generator guard bracket, if present. Remove the two 151152 screws located to the right and left of the contact box, and raise the 151358 contact box. (Do not unsolder connections if box is connected to metal tubing). If wire connections to contact box are flexible, unsolder the wires inside the box and do not remove the box.

2. Remove the four 151642 mounting screws which mount the signal generator casting, two at the front end of the casting, and two at the rear.

NOTE

If the unit is equipped with an electrical signal line break mechanism, remove the mechanism by removing its two mounting screws.

3. Lift the signal generator upward from the Keyboard.

4. Disassembly of the signal generator is shown in 1149B.

(b) To replace the signal generator, reverse the procedure used in removing it.

1. The code bar bail latch should be under the code lever bail latch lever, and in the notches of all code bars, trip bar and upstop bar, the break rod in its guide hole, and the clutch trip bail extension in the clutch trip bar notch.

2. Recheck the non-repeat lever adjustment figure 4-13, the contact box adjustment figure 4-10, and the code lever adjustment figure 4-19.

(2) KEYBOARD SELECTOR CAM ASSEMBLY

(a) To remove cam assembly from signal generator, proceed as follows:

1. Remove signal generator from Keyboard Base. See paragraph 10.b.(1) above.

2. Disconnect the 90260 clutch latch lever spring.

3. Disconnect the 31636 clutch stop lever.

4. Disconnect the 125268 flutter lever spring.

*5. Remove the 112625 front nut of the 151157 signal generator shaft.

6. Remove the two 151658 screws that hold the 151064 rear plate to casting.

*7. Remove the signal generator shaft assembly by lifting it upward and pulling to the rear simultaneously.

8. Disassembly of the cam assembly is shown in 1149B.

*(b) To replace the keyboard selector cam assembly, reverse the procedure used in removing it. Be sure clutch is fully seated and engages the drum.

(3) KEYBOARD LABEL

(a) To remove the labels, proceed as follows:

1. Remove the 151354 or 153118 plastic cover mounting screw and remove the plastic cover.

2. Pick up plastic cover at top edge first.

(b) To replace the Keyboard label, reverse the proceedure used in removing it.

(4) KEYLEVER COVER

(a) To remove cover from the Keyboard, proceed as follows:

1. Remove the 151353 label covers and labels. See paragraph 10.b.(3).

*2. Remove the four 151346 screws located under the labels, two at the extreme right side and two at the extreme left side. Support the cover while removing the screws.

3. Pull keylever cover forward to remove.

4. See 1149B for disassembly.

(b) To replace the keylever cover, reverse the procedure used in removing it.

(c) To remove the 153117 cover from base, proceed as follows:

1. Remove the two 151658 screws located inside the sealing plate, one at the right side and one at the left side.

2. Pull keylever cover forward and downward to unhook it from two studs near bottom.

(d) To replace the keylever cover, reverse the procedure used in removing it.

(5) KEYLEVER

(a) To remove keylever, proceed as follows:

1. Use keylever remover tool No. 151383 in the following manner. Insert the smaller lug of the keylever remover in the slot of the keylever and engage the shoulder of the larger lug on the top of the code lever. Pry upward to unsnap keylever from code lever. The plastic keytop should not be removed from any keylever to change a character..

2. See 1149B for disassembly.

*(b) To replace the keylever, reverse the procedure used in removing it. Support the code lever so that it will not be forced down.

*(6) SPACE BAR

(a) To remove space bar, proceed as follows:

1. Remove the keylever cover. See paragraph 10.b.(4).

2. Remove the two 151223 pivot shoulder screws on left and right sides of the 151045 space bar assembly.

3. See 1149B for disassembly of the space bar.

(b) To replace the space bar, reverse the procedure used in removing it.

*(7) KEYTOP GUIDE PLATE

*(a) To remove keytop guide plate, proceed as follows:

1. Remove the keylever cover. See paragraph 10.b.(4).

2. Remove the six 151346 mounting screws on top side of guide plate.

3. See 1149B for disassembly.

*(b) To replace the keytop guide plate, reverse the procedure used in removing it.

(8) KEYBOARD LOCKBALL CHANNEL

(a) To remove lockball channel, proceed as follows:

1. Remove the keylever cover. See paragraph 10.b.(4).

2. Remove the two 151637 channel mounting screws at the left and right ends.

*3. Pull channel forward with caution to avoid dropping the 32 wedges that are located on the code levers. Wedges must be replaced separately when reassembling. Avoid losing any of the 43 balls in the channel.

4. See 1149B for disassembly.

(b) To replace the keyboard lockball channel, reverse the procedure used in removing it.

(9) SEALING PLATE

(a) To remove sealing plate proceed as folows:

1. Remove the keylever cover. See paragraph 10.b.(4).

2. Remove the keylevers. See paragraph 10.b.(5).

3. Disconnect the 151105 space bar link (keyboard only) at its snap connection.

4. Remove all sealing plate mounting screws.

5. See 1149B for disassembly.

(b) To replace the sealing plate, reverse the procedure used in removing it.

(10) KEYBOARD LOCK-LOCAL LINE FEED MECHANISM

(a) To remove keyboard lock-local line feed mechanism, proceed as follows:

1. Remove the signal generator from the keyboard. See paragraph 10.b.(1) above.

2. Unhook the 7618 code lever bail spring from the 151840 code lever bail.

3. Loosen the two 151090 pilot screws and remove the 151840 code lever bail.

4. Remove the 119651 retaining ring from the 151858 local line feed trip bail.

*5. Remove the two 151692 mounting screws and remove the keyboard-lock and local line-feed mechanism through the hole in the bottom of the base.

6. See 1149B for disassembly.

(b) To replace the keyboard lock-local line feed mechanism, reverse the procedure used in removing it.

(11) KEYBOARD CODE BAR ASSEMBLY

(a) To remove code bar assembly, proceed as follows:

1. Remove the keylever cover. See paragraph 10.b.(4).

2. Remove the keylevers. See paragraph 10.b.(5).

*3. Disconnect the 151105 space code lever extension at its snap connection.

4. Remove the signal generator. See paragraph 10.b.(1).

*5. Remove the two 151658 and two 151346 code bar assembly mounting screws located on top of the code bar frame.

6. Remove the two 151692 mounting screws and remove the 151856 local C.R. bracket.

7. Remove the keyboard lock-local line feed mechanism. See paragraph 10.b.(10).

8. Remove the 3599 nut and the 151008 code lever bail latch lever with spring. Remove the three 151657 screws which mount the 151367 non-repeat bell crank plate assembly. Remove the plate assembly. Remove code bar assembly through the opening in top side of the base.

9. The disassembly of the keyboard code bar assembly is shown in 1149B.

(b) To replace the keyboard code bar assembly, reverse the procedure used in removing it.

(12) CODE BAR

(a) To remove a code bar from the keyboard assembly, proceed as follows:

1. Remove code bar assembly. See paragraph 10.b.(11).

2. Disconnect the 42661 code bar springs.

3. Remove the 151082 mounting screw and remove the 151102 lock bar pawl from the 151849 code lever guide.

4. Loosen the 151688 mounting screws for the left and right code bar guides until they are friction tight and lift the 151023 guides to their extreme upward position.

5. Remove code bar by sliding it to the left or right to get one end of the code bar out of its guide.

6. Disassembly of the code bar mechanism is shown in 1149B.

(b) To replace a code bar, reverse the procedure used in removing it.

*c. KEYBOARD (NEW DESIGN)
See Page 1-2, Paragraph k.

(1) SIGNAL GENERATOR

(a) To remove the signal generator assembly, proceed as follows:

1. Remove the typing unit if it is present.

2. Remove the 154131 contact box cover, and disconnect the signal line leads from the 154042, 154043 contact terminals.

3. Remove the two 153841 hold-down screws at the front of the 154200 signal generator frame, and the 74805 screw at the right rear of the frame.

4. Lift the signal generator carefully, while holding the universal bail back so that the non-repeat lever clears and its spring will not be excessively stretched.

5. Disassembly of signal generator is shown in 1149B.

CAUTION

If the non-repeat lever gets pulled down approximately

90 degrees from normal position, its spring might be stressed beyond elastic limits which will result in assembly malfunction.

(b) To replace the signal generator, reverse the procedure used in removing it.

*(2) KEYBOARD LABELS, KEYBOARD HOOD, KEYBOARD FRONT SEAL AND KEYBOARD SEAL PLATES

(a) To remove the plastic windows and labels, hood, seal, and seal plates, proceed as follows:

1. Remove the four 154202 screws which secure the 154198 windows and label sets.

2. Remove the two 151632 screws underneath the 154110 hook that hold the hood to the 154203 hood mounting bracket; and remove the four 151659 screws on top of the hood which hold it to the 154210, 154211 left and right frame mounting brackets.

3. Pull the hood forward to remove.

4. Stretch the 154020 rubber keyboard seal off its 154057, 154058 plates.

5. Remove the four 151442 screws and two 154203 hood mounting brackets.

6. Remove the 154058 upper seal plate by unscrewing the three 151722 screws at its rear.

7. Remove the 154057 lower seal plate by unscrewing the two 151632 screws at its front.

8. See 1149B for disassembly.

(b) To replace the keyboard labels, reverse the procedure used in removing it.

*(3) KEYBOARD

(a) To remove the keyboard assembly, proceed as follows:

1. Remove the typing unit and signal generator assembly as specified in paragraph 10.a. and b.(1).

2. Remove the plastic windows and labels, hood, seal, and seal plate as specified in paragraph 10. b. (2).

*3. Remove the four 151631 screws that hold the 154210, 154211 left and right frame-mounting brackets to the front of the 154000 base.

4. Remove the two 151632 screws which hold the 154068, 154069 right and left code lever guide brackets on the top of the base, and the two 151632 screws at the extreme right and left of the 154055 front bracket which hold it on the base.

5. When these four screws in front and four on top of the base have been removed, tip up the front of the keyboard assembly and pull it forward, disengaging the function levers.

6. Note that all function levers are under their corresponding function bails - except the keyboard lock function lever - which fits on top of its function bail.

7. When reassembling, depress the keyboard lock keylever so that the lock function lever will go in over its bail, instead of under as the other function levers should.

8. Disassembly of the Keyboard is shown in 1149B.

NOTE

It is easier to disassemble and reassemble the keyboard assembly with the base standing up on its rear side.

(b) To replace the keyboard assembly reverse the procedure used in removing it.

(4) SIGNAL GENERATOR CONTACT BOX ASSEMBLY

(a) To remove the contact box assembly, proceed as follows:

1. Remove the 154131 contact box cover and disconnect the signal line leads.

*2. Unhook the 86304 toggle drive link spring.

3. Unscrew the two 151632 screws at the front of the 154009 front plate that hold the contact box assembly.

4. Disengage the 156644 drive link from the transfer bail and lift off the assembly. It is most economical to replace the entire contact assembly if contacts need replacement.

5. Disassembly of the contact box is shown in 1149B.

(b) To replace the contact box, reverse the procedure used in removing it.

(5) TRANSFER LEVER LOCKING BAIL

(a) To remove the transfer lever locking bail, proceed as follows:

1. Remove the signal generator assembly from the keyboard as specified in paragraph 10.b. (1).

2. Remove the contact box assembly as specified in paragraph 10.c.(4).

3. Remove the 70388 transfer lever lock-

ing bail spring.

4. Take out the 154140 locking bail by unlatching the clutch and rotating the shaft to position the cam in such a way so that the locking bail can be unhooked and dropped down from its guide post. Turn the locking bail clockwise until it forms a right angle with its guide and remove it through the bottom of the frame.

5. Disassembly of the mechanism is shown in 1149B.

(b) To replace the transfer lever locking bail, reverse the procedure used in removing it.

NOTE

It may be necessary to move the shaft back and forth to position the cam for maximum clearance.

(6) SIGNAL GENERATOR SHAFT

(a) To remove the cam, clutch, and shaft assembly, proceed as follows:

1. Remove the transfer lever locking bail as specified in paragraph 10.c. (5).

2. Remove the two 151631 screws which mount the 154101 clutch shaft rear mounting plate to the 154200 signal generator frame, and remove the 112626 nut which locks the shaft to the front of the frame.

*3. Hold the 154033 clutch latch lever and the 154034 clutch stop lever away and pull back on the clutch shaft rear mounting plate to disengage the shaft from the front plate.

4. Remove the entire cam, clutch, and shaft assembly by rotating it to clear the various transfer levers. The 154019 code bar bail eccentric follower, the 154138 felt washer, and the 154083 cam spacer will all fall free. These must be repositioned before reassembly.

5. To take the cam (with clutch assembly) off the shaft, disengage the clutch by holding the clutch shoe lever against the stop lug and slide the cam and clutch off.

6. Disassembly of the shaft assembly is shown in 1149B.

(b) To replace the shaft assembly, reverse the procedure used in removing it.

*(7) KEYTOP GUIDE PLATE

*(a) To remove the keytop guide plate, proceed as follows:

*1. Remove the plastic windows and labels, and hood as specified in paragraph 10.c. (2).

2. Remove the 151045 space bar by unscrewing the two 151223 shoulder screws that fasten it to the 154117 space bar bail.

*3. Remove the 151659 screw on the keytop guide plate under the space bar and the two 151659 screws in the upper corners of the plate which hold the plate to the frame.

4. Work the guide plate off the keytops and let them fall free.

5. Disassembly of the mechanism is shown in 1149B.

(b) To replace the guide plate over the key-levers, flop all levers to the rear. Place the front end of the guide plate down on the frame; and push the key-levers into their respective holes, starting with the bottom row and proceeding upward to the top row.

*d. MOTOR UNITS

(1) To remove the motor unit, proceed as follows:

(a) Remove the 151678 mounting screw on the left rear corner of the motor mounting bracket and take off the 152045 gear guard.

(b) Remove the 150966 top insulator from the 152467 keyboard-terminal block, and remove the motor cable leads from the terminal block.

(c) Remove the remaining three 151678 mounting screws from the motor mounting bracket and lift out the motor.

(d) Disassembly of the SYNCHRONOUS and GOVERNED motor is shown in Bulletin 1149B.

NOTE

If examination of the motor unit shows that dismantling may be necessary, consideration should be given to substituting another motor unit.

1. In order to prolong the life of governor slip ring brushes, the slip rings are machined to close concentricity requirements after assembly. These slip rings should not be replaced unless facilities for machining operation are available.

2. After the governor parts are assembled, the governor is carefully balanced to reduce vibration; therefore, when it becomes necessary to replace contacts, only the parts being replaced should be moved.

(2) To replace the motor unit, reverse the procedure used in removing it. Check and remake, if necessary, the adjustments of figures 1-11, 1-79 and 1-80.

*e. ELECTRICAL SERVICE UNIT

(1) To remove the electrical service unit, proceed as follows:

(a) Disconnect all plug and receptacle connections between the electrical service unit and other components of the Teletypewriter Set.

(b) Tilt the base or keyboard assembly forward to the maintenance position, or remove the keyboard or base to provide better acess, if required.

(c) Remove the wires from the 118759 terminal blocks in the cabinet.

(d) Take out the right and left 151437 studs and remove the electrical service unit.

(e) Disassembly of the electrical service assembly is shown in 1149B.

(f) The electrical service assembly may also be serviced by following step (b) above, then remove the two 151437 mounting studs and turn the service unit upside down.

(2) To replace the electrical service unit, reverse the procedure used in removing it.

WALL MOUNTED PRINTER

a. General

(1) The Motor Unit, the Electrical Service Unit and the paper roll are located below the base of the Wall Mounted Printer. Lift the cover from its frame to facilitate inspection and disassembly of the various components.

(2) The Typing Unit may be disconnected and lifted from its base for servicing. For further disassembly, refer to procedure outlined for the standard unit in the preceeding paragraphs.

b. The Electrical Service Unit

(1) The Electrical Service Unit is supported from the main frame by four projecting tabs. Its hinged front plate is held in the closed position by a magnetic latch. Lower the front plate and lift the unit from its mounting pads. Note the three-conductor power cable and the third wire ground connection linking each unit with the external ground terminal at the receptacle.

(2) CAUTION - All components must be well grounded (by bonding and the 3rd wire) to the external ground to eliminate any possibility of shock hazard when the units are replaced for service.

c. Base

(1) The Base is secured to the back plate assembly by studs. Note the routing of the cables from the Electrical Service Unit along the left rear edge of the back plate assembly and the top left side of the base. Remove the three clips which secure the cables and replace in the reverse order.

(2) Remove the Base and Motor Unit from the frame.

(3) To remove the local line feed, break or local carriage return operating lever:

(a) Remove the four mounting screws that retain the operating lever guide bracket.

(b) Remove the bracket.

(c) Remove the retaining ring.

(d) Remove the lever pivot stud.

SECTION 2 - VARIABLE FEATURE ADJUSTMENTS

1. REPEAT-ON-SPACE MECHANISM

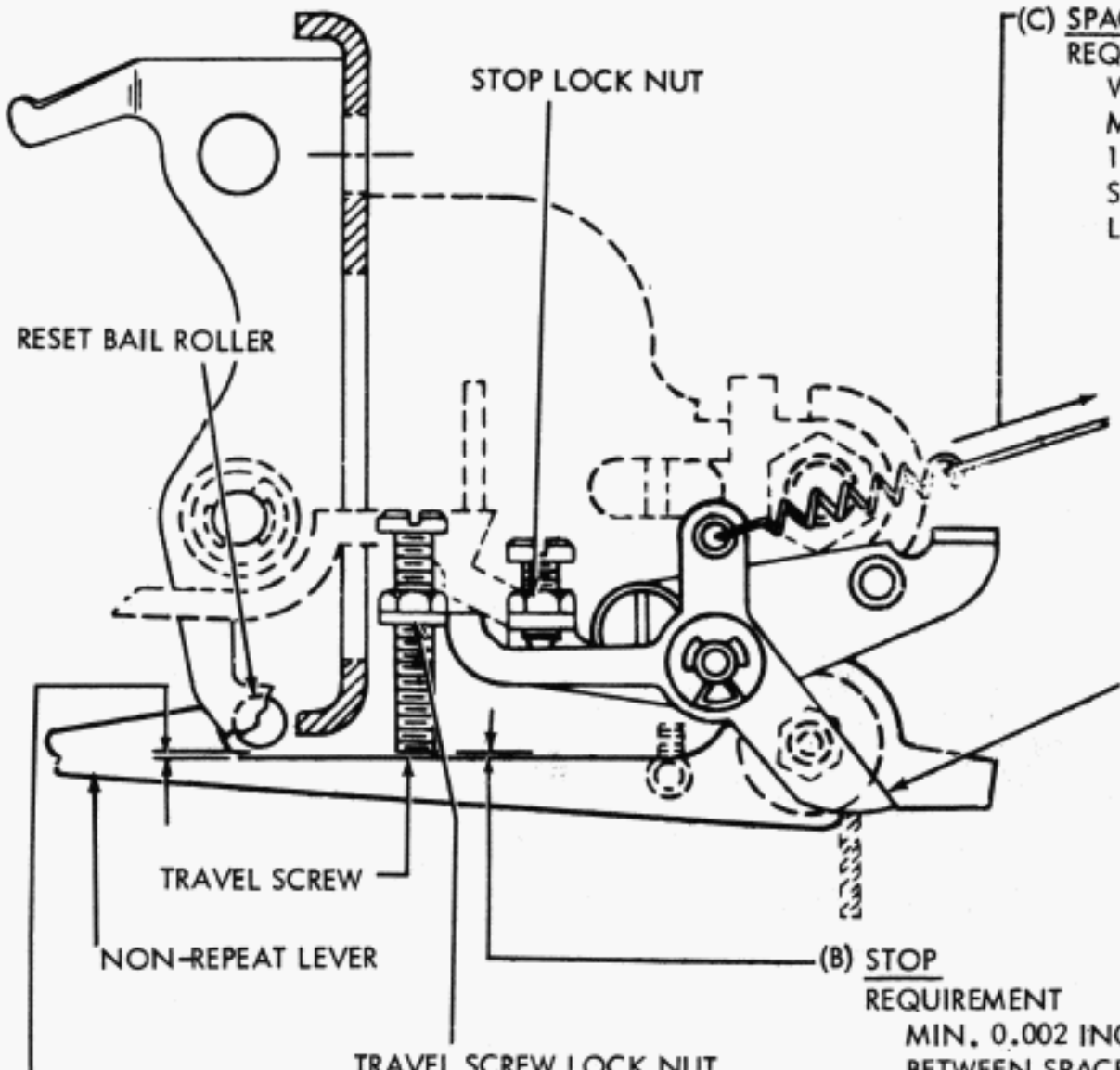

(C) SPACE - REPEAT LEVER SPRING
REQUIREMENT
WITH SPRING UNHOOKED MIN. 13-1/2 OZS. --- MAX. 16-1/2 OZS. TO STRETCH SPRING TO INSTALLED LENGTH.

(B) STOP
REQUIREMENT
MIN. 0.002 INCH --- MAX. 0.020 INCH BETWEEN SPACE - REPEAT LEVER TRAVEL SCREW AND NON-REPEAT LEVER.
TO ADJUST
DEPRESS "G" KEYLEVER TO TRIP KEYBOARD CLUTCH. POSITION STOP BY LOOSENING STOP LOCK NUT. RECHECK AFTER ADJUSTMENT.

(A) TRAVEL SCREW
REQUIREMENT
WITH SPACE KEY FULLY DEPRESSED: MIN. 0.035 INCH --- MAX. 0.080 INCH BETWEEN RESET BAIL ROLLER AND NON-REPEAT LEVER.
TO ADJUST
WITH SPACE KEY FULLY DEPRESSED, ADJUST TRAVEL SCREW BY LOOSENING TRAVEL SCREW LOCK NUT. RECHECK AFTER ADJUSTMENT.

NOTE

SPACE BAR TOUCH TO OBTAIN A REPEAT IS AFFECTED BY THIS ADJUSTMENT. TO GET A LIGHTER TOUCH ADJUST TO UPPER LIMIT. TO OBTAIN A HEAVIER TOUCH ADJUST TO THE LOWER LIMIT.

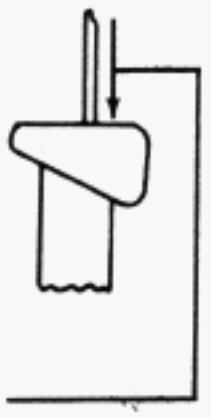

(D) SPACE BAR
(1) REQUIREMENT (SINGLE SPACE)
NORMAL KEY TOP PRESSURE TO TRANSMIT SINGLE SPACE.
(2) REQUIREMENT (REPEAT SPACE)
SPACE BAR FULLY DEPRESSED AND HELD DOWN TO EFFECT CONTINUOUS SPACE TRANSMISSION.

FIGURE 2-1 KEYBOARD, REPEAT-ON-SPACE MECHANISM

2. TIME DELAY MECHANISM

TIME DELAY RATCHET WHEEL TENSION

REQUIREMENT

HOLD OFF ALL PAWLS.

MIN. 2 OZS.
MAX. 8 OZS.

TO MOVE RATCHET WHEEL.

TO ADJUST

REMOVE AND BEND THE FRICTION SPRINGS.

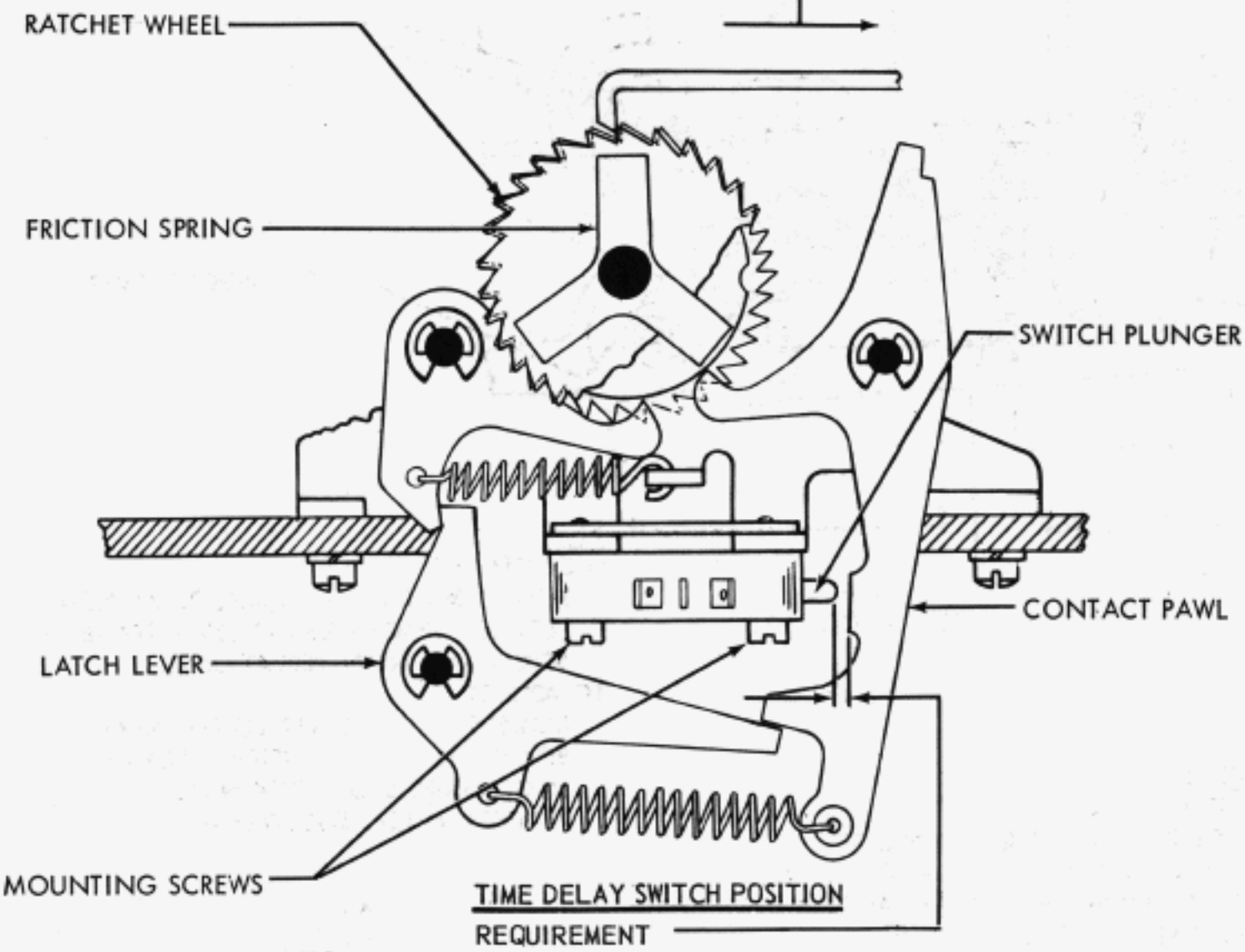

TIME DELAY SWITCH POSITION

REQUIREMENT

CONTACT PAWL NOT BLOCKED BY LATCH LEVER AND ON HIGH PART OF THE RATCHET WHEEL. SOME CLEARANCE BETWEEN CONTACT PAWL AND SWITCH PLUNGER WHEN PLAY IN RATCHET WHEELS IS TAKEN UP IN DOWNWARD DIRECTION MAX. 0.010 INCH

TO ADJUST

POSITION THE SWITCH WITH THE TWO SWITCH MOUNTING SCREWS LOOSENED.

FIGURE 2-2 KEYBOARD OR BASE, TIME DELAY MECHANISM

2. TIME DELAY MECHANISM

<u>CONTACT LATCH PAWL SPRING TENSION</u>
REQUIREMENT
LATCH PAWL SPRING UNHOOKED AT ANCHOR
MIN. 12 OZS.
MAX. 15 OZS.
TO STRETCH SPRING TO INSTALLED LENGTH AS SHOWN.

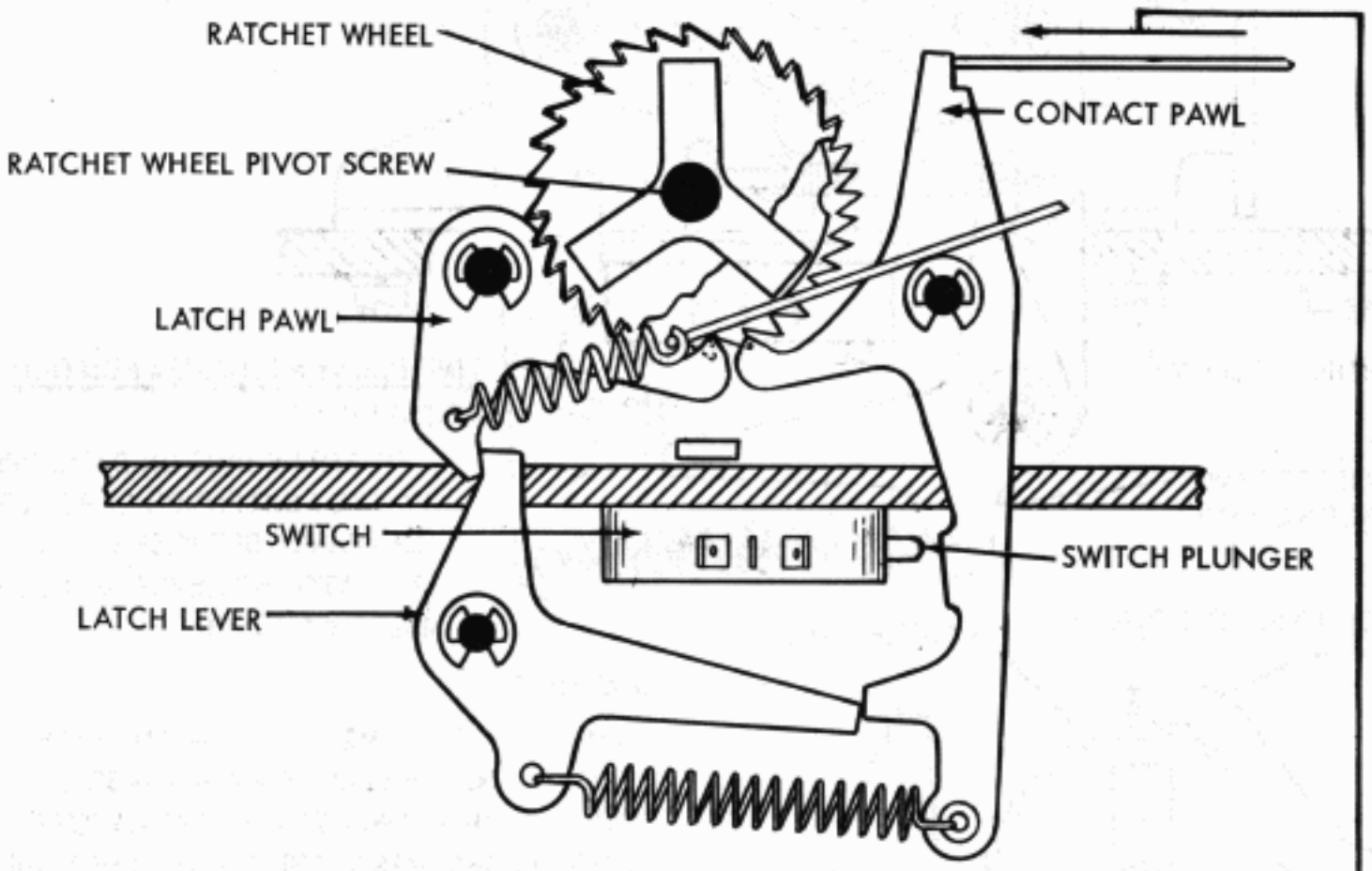

<u>CONTACT PAWL SPRING TENSION</u>
REQUIREMENT
CONTACT PAWL LATCHED ON END OF LATCH LEVER.
MIN. 8 OZS.
MAX. 12 OZS.
TO START THE PAWL MOVING.

FIGURE 2-3 KEYBOARD OR BASE, TIME DELAY MECHANISM, LEFT SIDE VIEW

2. TIME DELAY MECHANISM

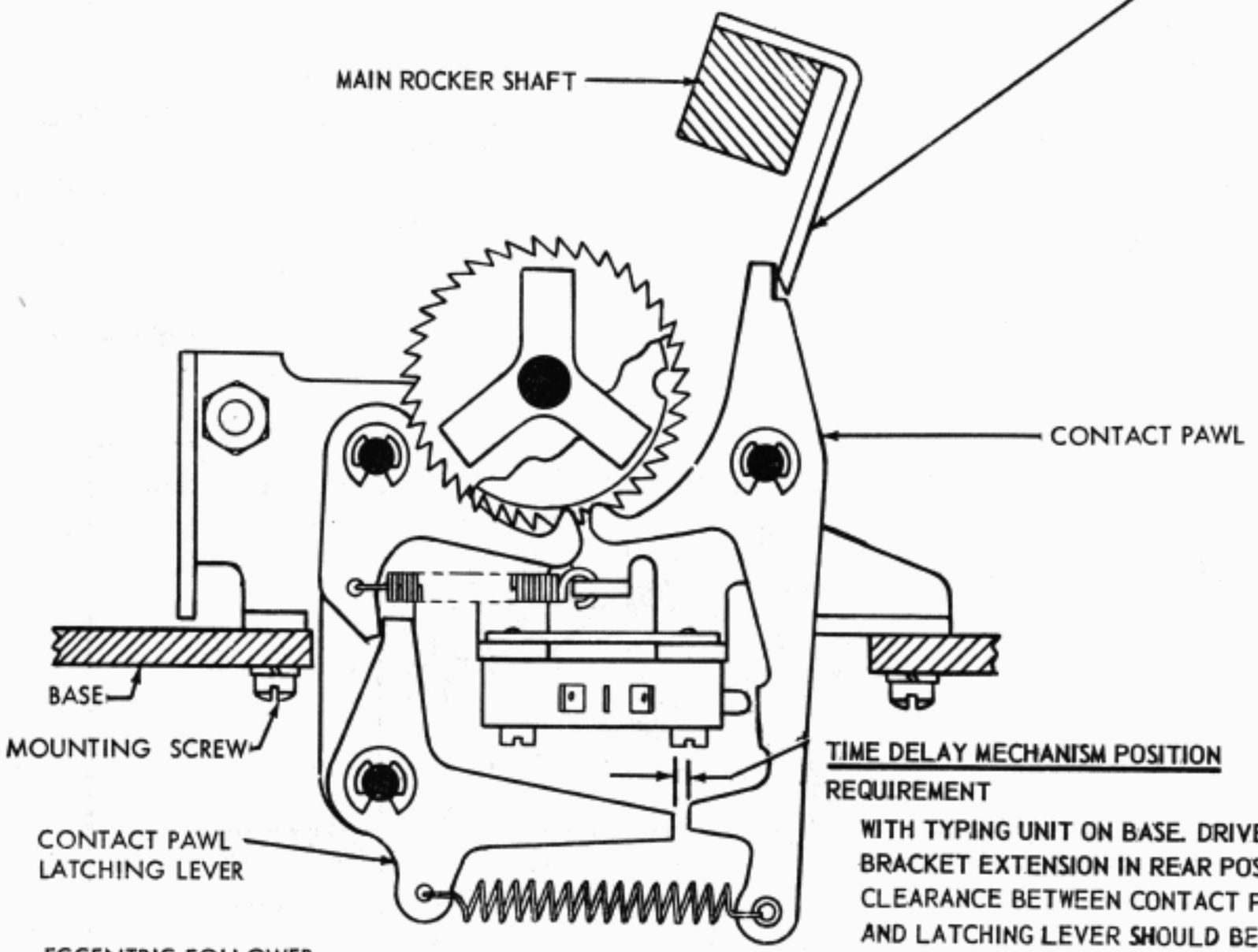

TIME DELAY MECHANISM POSITION

REQUIREMENT

WITH TYPING UNIT ON BASE. DRIVE BRACKET EXTENSION IN REAR POSITION. CLEARANCE BETWEEN CONTACT PAWL AND LATCHING LEVER SHOULD BE MIN. 0.020 INCH.

TO ADJUST

REMOVE THE TYPING UNIT FROM THE BASE. LOOSEN THE TIME DELAY MOUNTING SCREWS. ROTATE THE RATCHET WHEELS UNTIL THE LATCH PAWL DROPS INTO THE INDENTS IN THE TWO RATCHET WHEELS. LIFT THE ECCENTRIC FOLLOWER PAWL UPWARD. TAKE UP THE PLAY BY PRESSING THE RATCHET WHEELS BACKWARD. WITH THE ECCENTRIC FOLLOWER PAWL AT THE END OF ITS EXTREME FORWARD TRAVEL, POSITION THE MECHANISM SO THAT THE POINT OF THE LOWER BEVELED EDGE OF THE FOLLOWER PAWL RESTS ON THE PEAK OF THE FIRST RATCHET-WHEEL TOOTH FORWARD OF A VERTICAL CENTERLINE THROUGH THE RATCHET WHEEL OR OVER TRAVELS THE PEAK BY NOT MORE THAN 0.010 INCH. RECHECK MINIMUM CLEARANCE OF 0.020 INCH WITH TYPER ON KEYBOARD BASE. IF NECESSARY, REFINE ADJUSTMENT

FIGURE 2-4 KEYBOARD OR BASE, TIME DELAY MECHANISM, LEFT SIDE VIEW

2. TIME DELAY MECHANISM

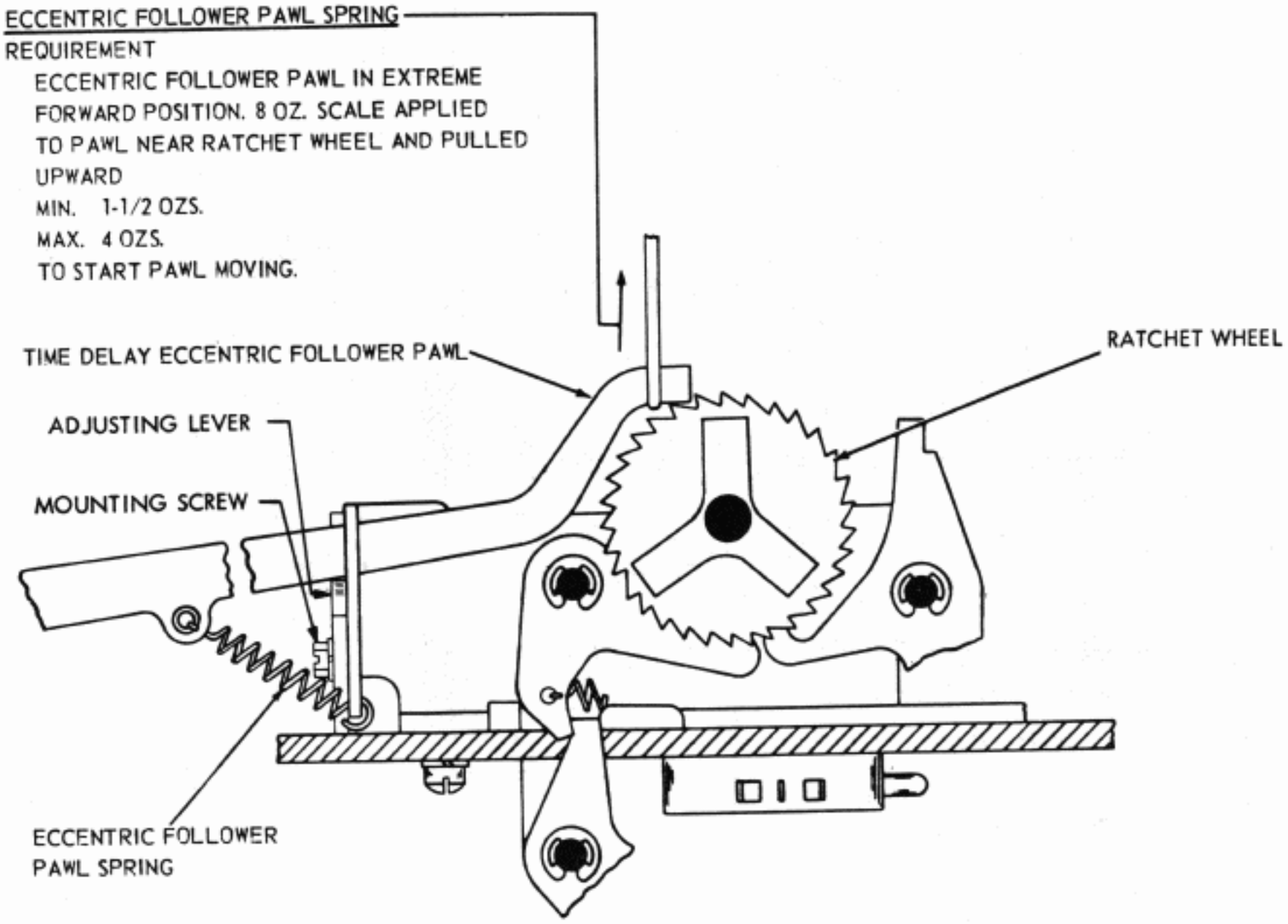

ECCENTRIC FOLLOWER PAWL SPRING

REQUIREMENT

ECCENTRIC FOLLOWER PAWL IN EXTREME FORWARD POSITION. 8 OZ. SCALE APPLIED TO PAWL NEAR RATCHET WHEEL AND PULLED UPWARD

MIN. 1-1/2 OZS.

MAX. 4 OZS.

TO START PAWL MOVING.

TIME DELAY DISABLING DEVICE

REQUIREMENT

DISABLE THE TIME DELAY MECHANISM WHEN NOT REQUIRED.

TO ADJUST

LOOSEN THE ADJUSTING LEVER MOUNTING SCREW AND PRESS DOWNWARD ON THE LEVER TO RAISE ECCENTRIC FOLLOWER OUT OF ENGAGEMENT WITH ITS RATCHET WHEEL.

NOTE: FOR ADJUSTMENT OF EARLIER DESIGN MECHANISMS SEE FIGURE 4-44

FIGURE 2-5 KEYBOARD OR BASE, TIME DELAY DISABLING DEVICE

3. SIGNAL LINE BREAK MECHANISM (BASE)

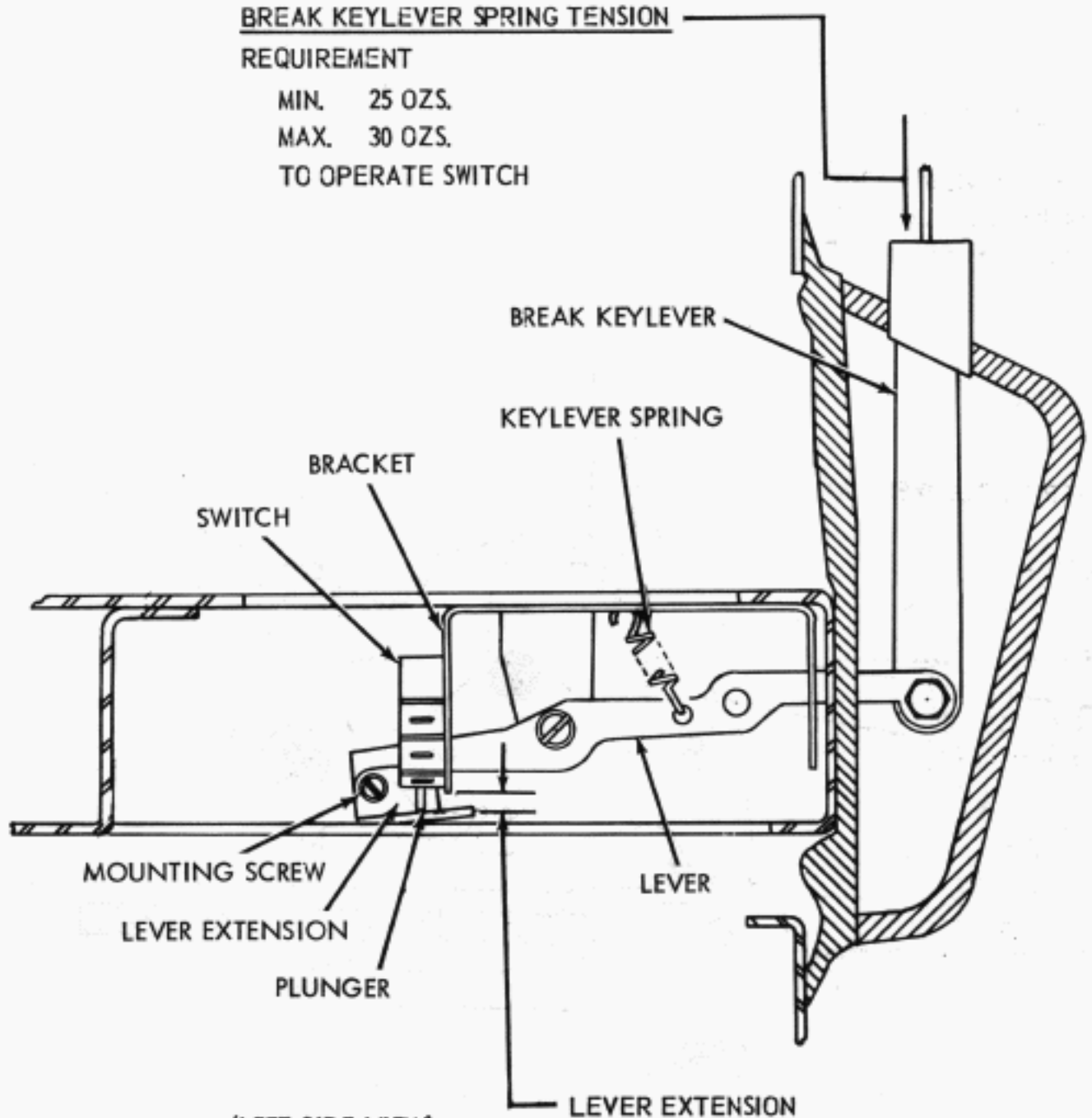

(LEFT SIDE VIEW)

FIGURE 2-6 BASE, BREAK MECHANISM

4. PAPER FEED OUT MECHANISM

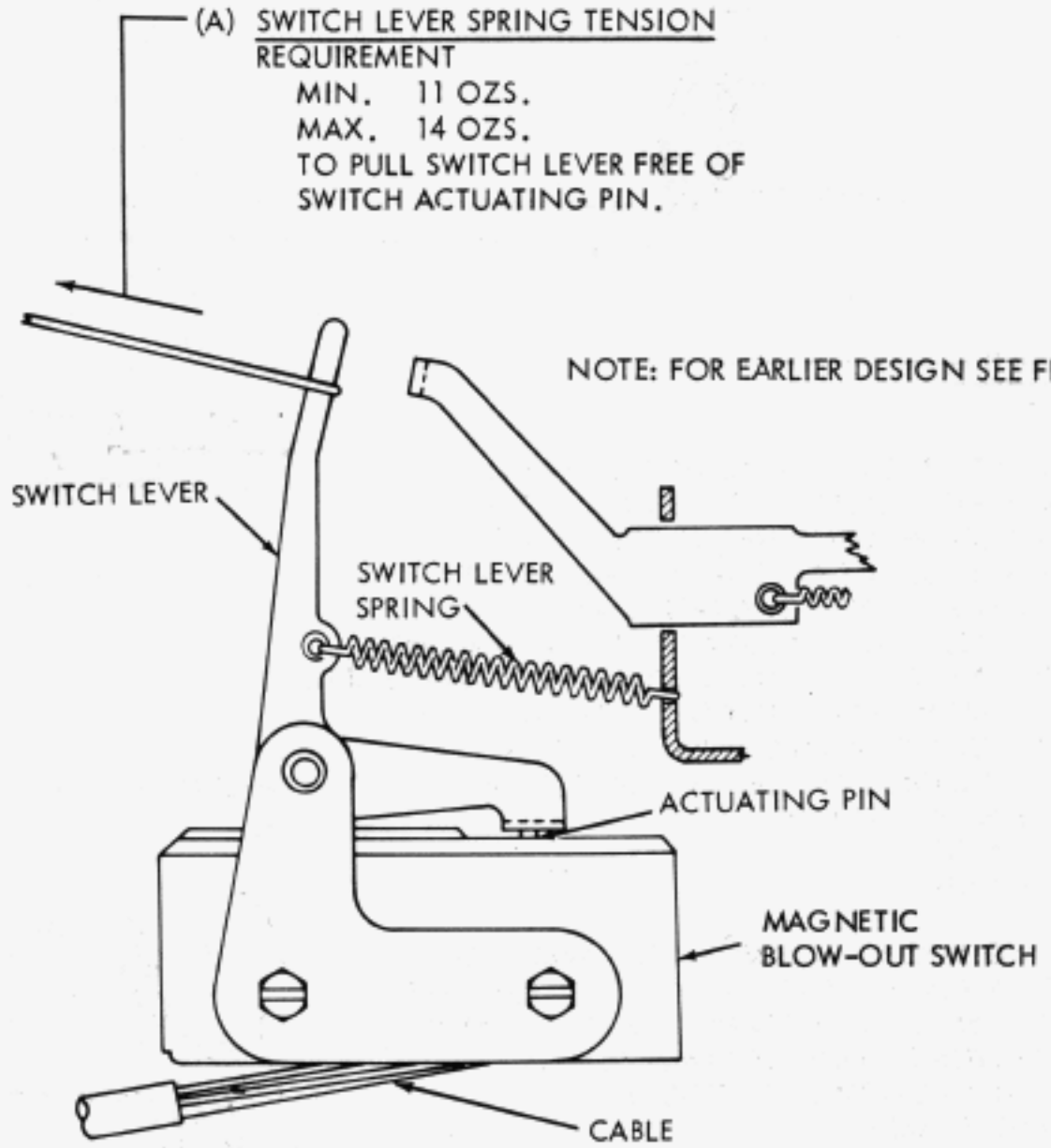

FIGURE 2-7 KEYBOARD OR BASE, LOCAL PAPER FEED-OUT MECHANISM

5. SPROCKET FEED MECHANISM

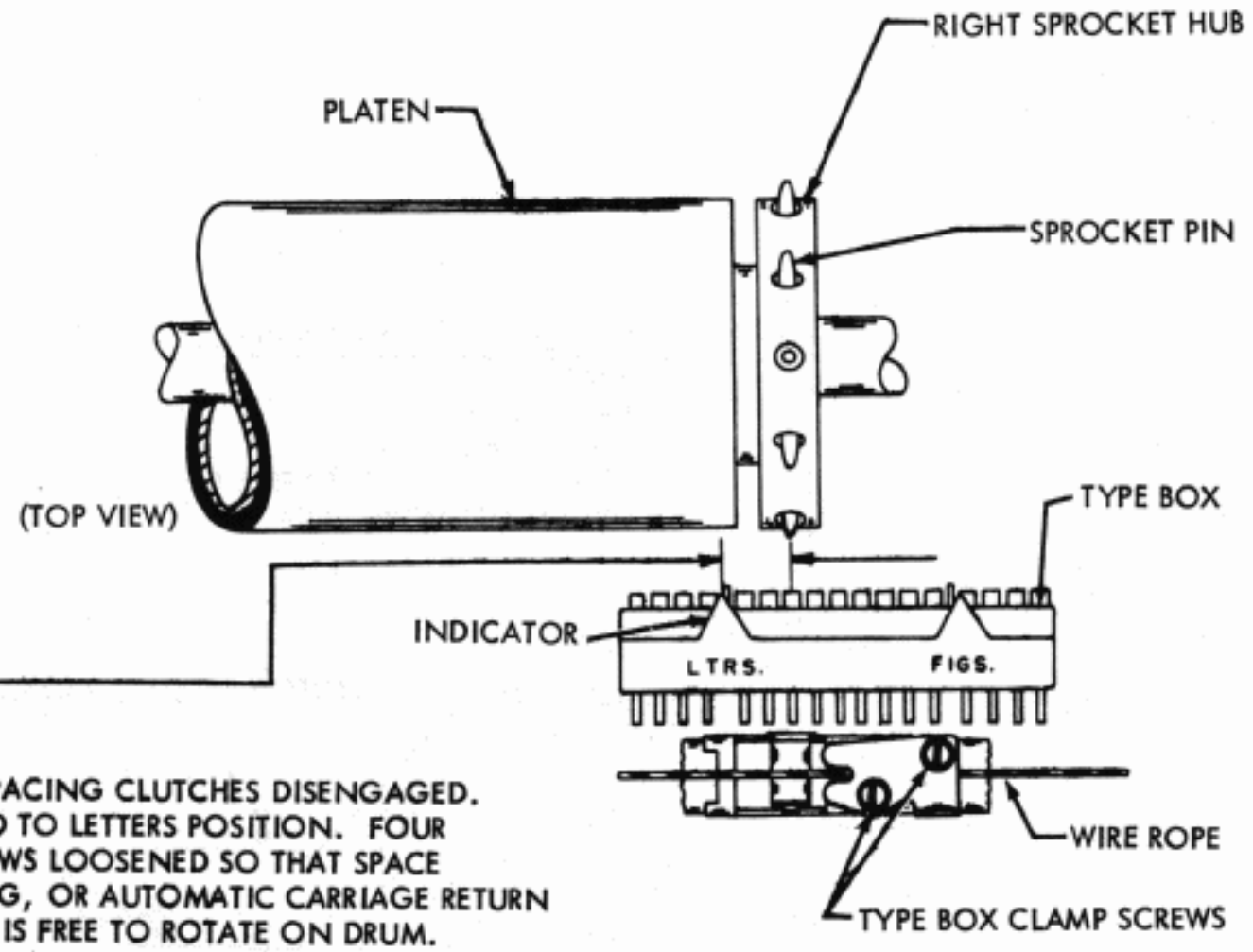

TYPE BOX POSITION

REQUIREMENT

TYPE BOX AND SPACING CLUTCHES DISENGAGED. TYPE BOX SHIFTED TO LETTERS POSITION. FOUR MOUNTING SCREWS LOOSENED SO THAT SPACE SUPPRESSION RING, OR AUTOMATIC CARRIAGE RETURN LINE FEED RING, IS FREE TO ROTATE ON DRUM. (UNITS EQUIPPED WITH LIMITED ADJUSTMENT SPACING DRUM: SPACING CUT OUT AND AUTOMATIC CARRIAGE RETURN LINE FEED ARMS IN MAXIMUM COUNTER-CLOCKWISE POSITION. SEE FIG. 4-27) CLEARANCE BETWEEN LETTERS PRINT INDICATOR AND CENTER LINE OF SPROCKET PINS IN RIGHT HUB:
MIN. 5/16 INCH
MAX. 7/16 INCH

TO ADJUST

LOOSEN TWO TYPE BOX CLAMP SCREWS AND TWO PRINTING CARRIAGE CLAMP SCREWS. POSITION TYPE BOX. TIGHTEN TYPE BOX CLAMP SCREWS. DO NOT TIGHTEN PRINTING CARRIAGE CLAMP SCREWS UNTIL PRINTING CARRIAGE POSITION ADJUSTMENT IS MADE.

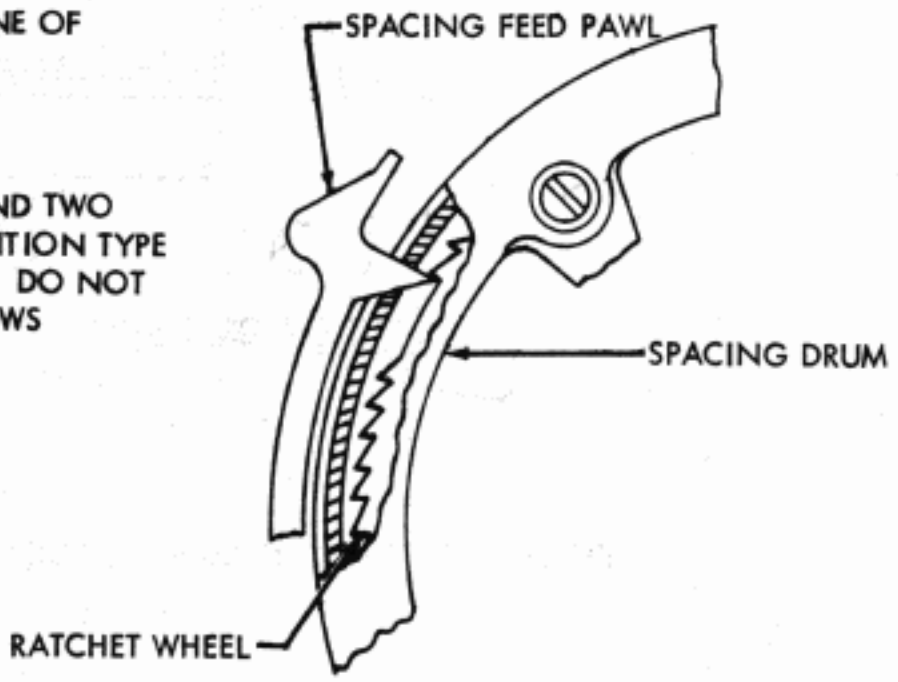

FIGURE 2-8 TYPING UNIT, PLATEN AND PRINTING MECHANISM

5. SPROCKET FEED MECHANISM

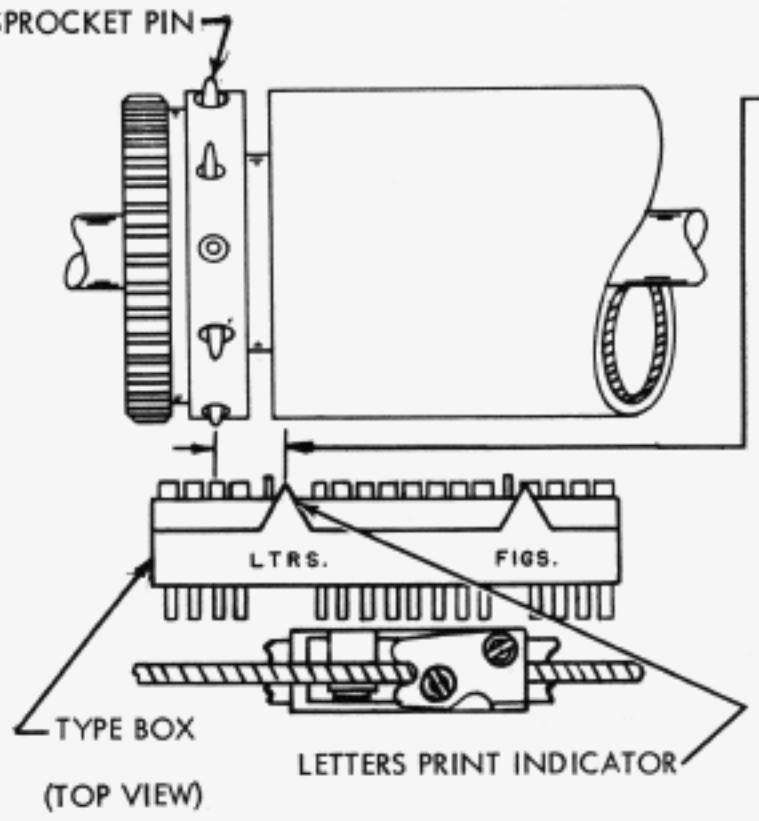

(TOP VIEW)

(A) LEFT MARGIN
REQUIREMENTS --- (

(1) TYPE BOX CLUTCH DISENGAGED, SPACING DRUM FULLY RETURNED, AND TYPE BOX SHIFTED TO LETTERS POSITION; CLEARANCE BETWEEN CENTER OF LETTERS PRINT INDICATOR ON TYPE BOX AND CENTER LINE OF SPROCKET PINS AT LEFT HUB SHOULD BE:
MIN. 5/16 INCH --- MAX. 7/16 INCH

TO ADJUST --- POSITION CARRIAGE RETURN RING WITH ITS MOUNTING SCREWS LOOSENED.

(2) SPACING CLUTCH DISENGAGED, FRONT SPACING FEED PAWL IN ITS FARTHEST ADVANCED POSITION, SPACING DRUM FULLY RETURNED, AND PLAY IN SPACING GEAR (FIG. 1-36) TAKEN UP-CLOCKWISE; CLEARANCE BETWEEN PAWL AND SHOULDER OF RATCHET WHEEL TOOTH IMMEDIATELY AHEAD:
MIN. SOME --- MAX. 0.008 INCH

(3) THE REAR PAWL WHEN FARTHEST ADVANCED SHOULD DROP INTO THE INDENTATION BETWEEN RATCHET WHEEL TEETH AND SHOULD BOTTOM FIRMLY IN NOTCH.

TO ADJUST --- REFINE REQUIREMENT (1) ABOVE

(B) PRINTING HAMMER STOP BRACKET

(1) FOR UNITS WITH THICK TYPEBOX AND DUMMY TYPE PALLETS USE CORRESPONDING STANDARD ADJUSTMENT EXCEPT CLEARANCE BETWEEN PRINTING HAMMER AND DUMMY TYPE PALLET SHOULD BE
MIN. SOME MAX. 0.020 INCH

(2) FOR UNITS WITH THIN TYPEBOX - NO DUMMY TYPE PALLETS, USE CORRESPONDING STANDARD ADJUSTMENT.

(3) CERTAIN MULTIPLE FORM UNITS WILL REQUIRE A REFINEMENT OF STANDARD ADJUSTMENT FOR THE STOP BRACKET TO
MIN. 0.005 INCH --- MAX. 0.015 INCH

(C) RIGHT MARGIN

(1) FOR UNITS WITH LIMITED ADJUSTMENT SPACING DRUM, USE CORRESPONDING STANDARD ADJUSTMENT.

(2) FOR UNITS WITH UNIVERSAL SPACING DRUM, USE CORRESPONDING STANDARD ADJUSTMENT.

(D) PRINTING CARRIAGE POSITION
USE STANDARD ADJUSTMENT

(E) TYPE BOX ALIGNMENT
USE STANDARD ADJUSTMENT

FOLLOWING THIS ADJUSTMENT, ALL SCREWS SHOULD BE TIGHTENED.

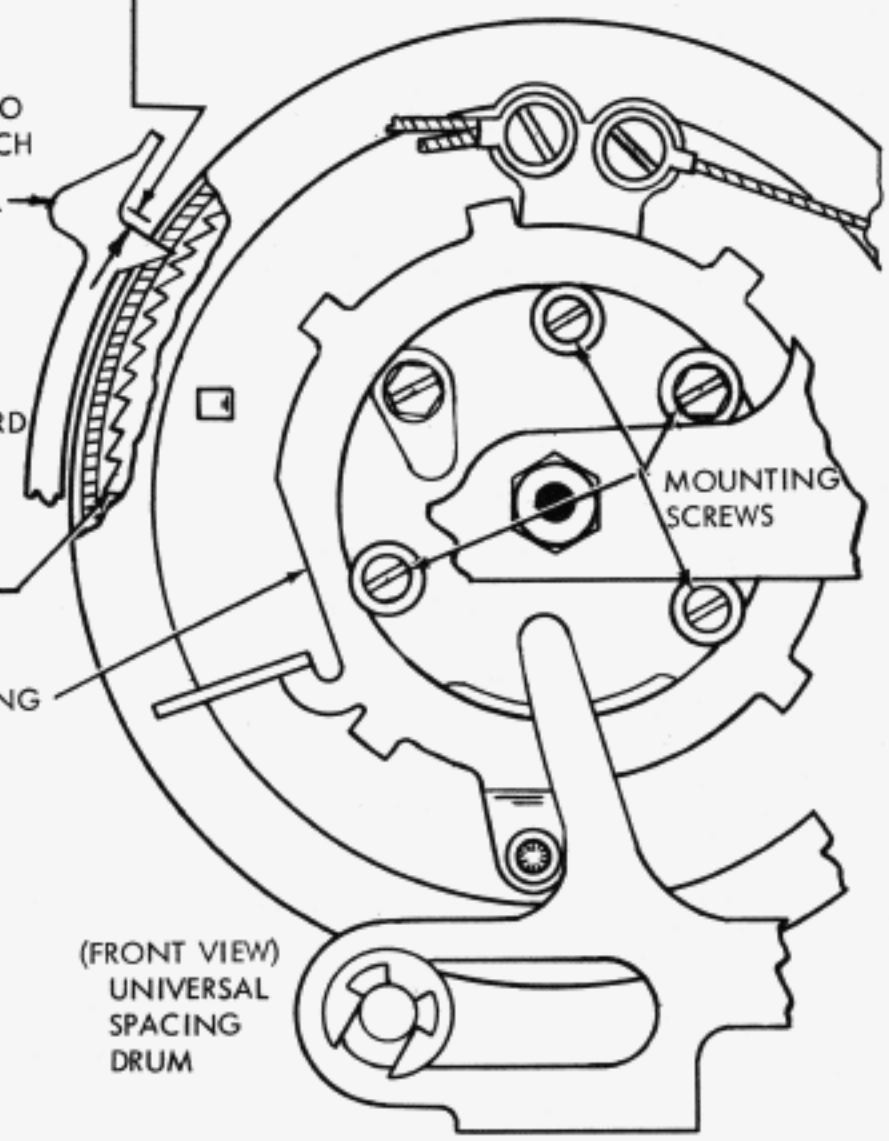

FIGURE 2-9. TYPING UNIT, PLATEN AND SPACING MECHANISM

5. SPROCKET FEED MECHANISM

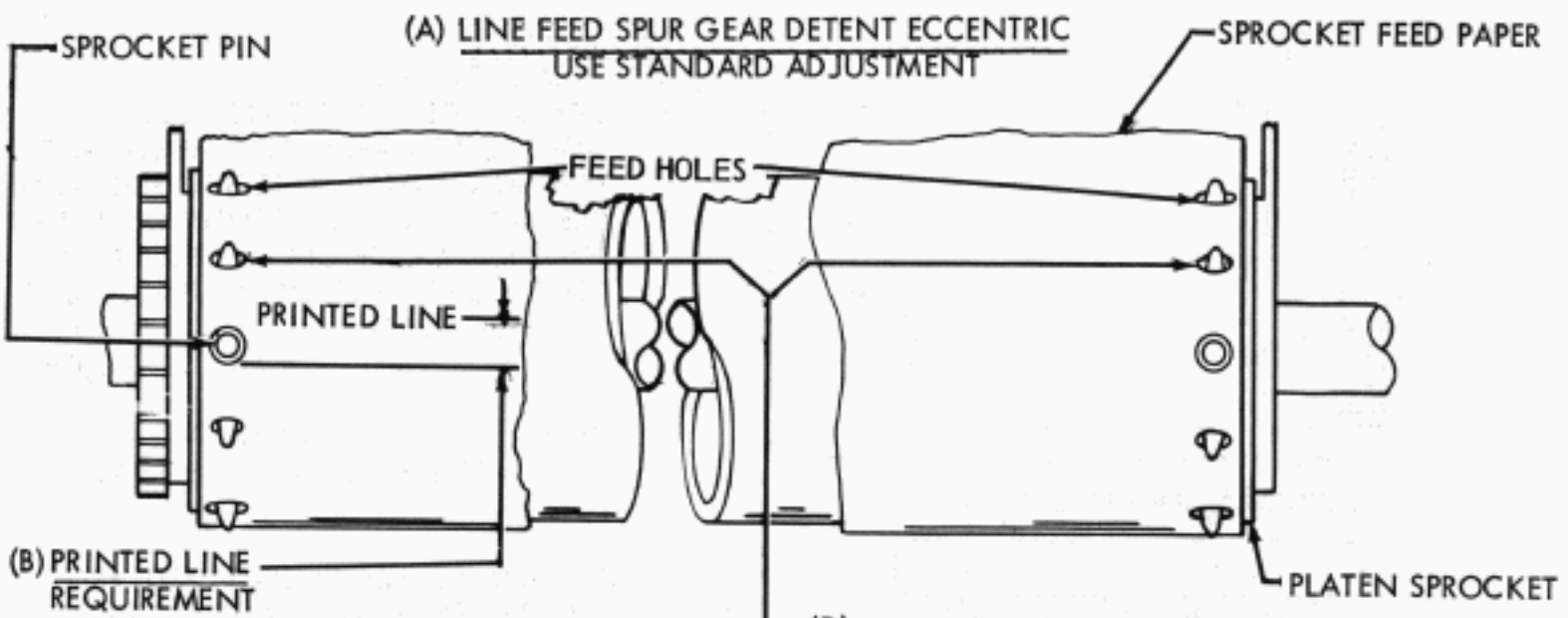

(B) PRINTED LINE REQUIREMENT

THE BOTTOM OF THE PRINTED LINE SHOULD BE 1/32 INCH ±1/64 INCH (PLUS A MULTIPLE OF 1/6 INCH IF REQUIRED) ABOVE A HORIZONTAL LINE DRAWN EVEN WITH THE BOTTOM EDGE OF ANY SPROCKET HOLE.

TO ADJUST

LOOSEN SCREWS AND POSITION LEFT SPROCKET

NOTE: SPUR GEAR AND LEFT PLATEN RETAINER MUST BE REMOVED TO MAKE PRINTED LINE ADJUSTMENT.

(D) SPROCKET PIN SEPARATION

(1) REQUIREMENT

WITH SINGLE SHEET OF SPROCKET FEED PAPER PLACED ON THE PLATEN THE SPROCKET PINS SHOULD BE CENTRALLY LOCATED IN THE FEED HOLES OF THE PAPER

(2) REQUIREMENT

PRINTED LINE SHOULD BE PARALLEL TO A LINE DRAWN PERPENDICULAR TO EDGE OF PAPER WITHIN PLUS OR MINUS 1/32 INCH

TO ADJUST

POSITION RIGHT SPROCKET WITH CLAMP SCREW LOOSENED.

(C) PLATEN END PLAY

REQUIREMENT

LINE FEED PAWLS DISENGAGED. PLATEN SHAFT SHOULD HAVE SOME END PLAY MAX. 0.010 INCH

TO ADJUST

POSITION PLATEN SPUR GEAR WITH CLAMP SCREW LOOSENED.

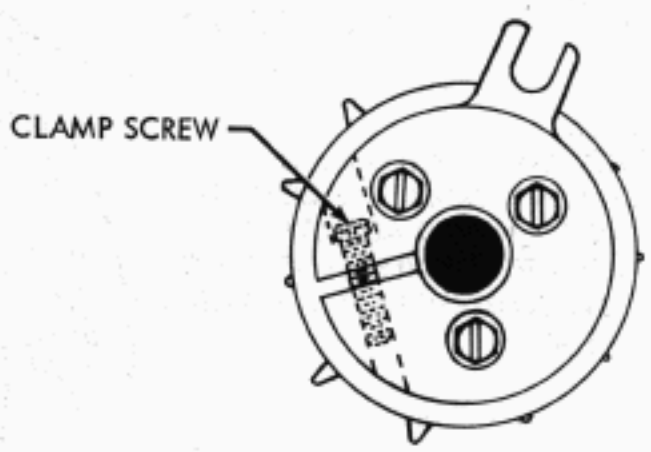

(RIGHT SIDE SPROCKET)

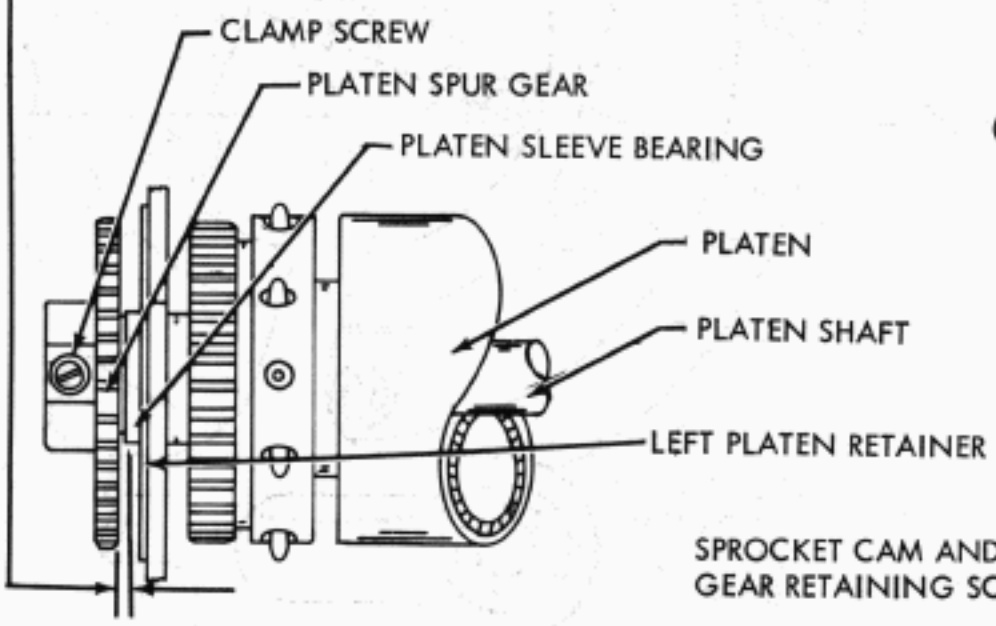

(FRONT VIEW)

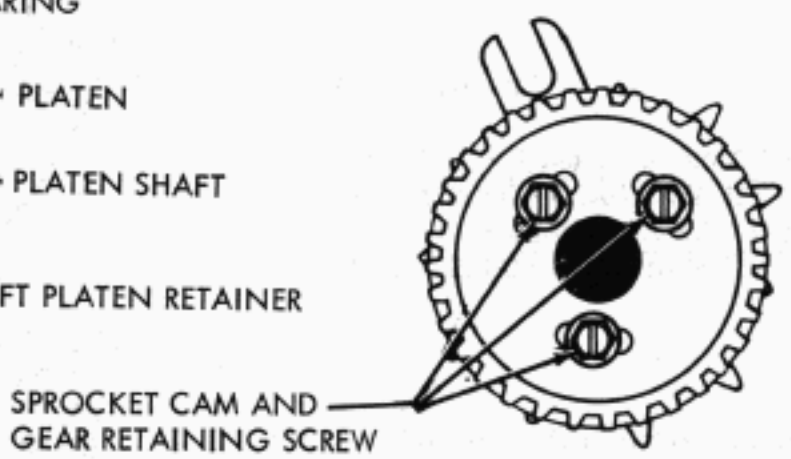

(LEFT SIDE SPROCKET)

FIGURE 2-10. TYPING UNIT, SPROCKET FEED PLATEN

5. SPROCKET FEED MECHANISM

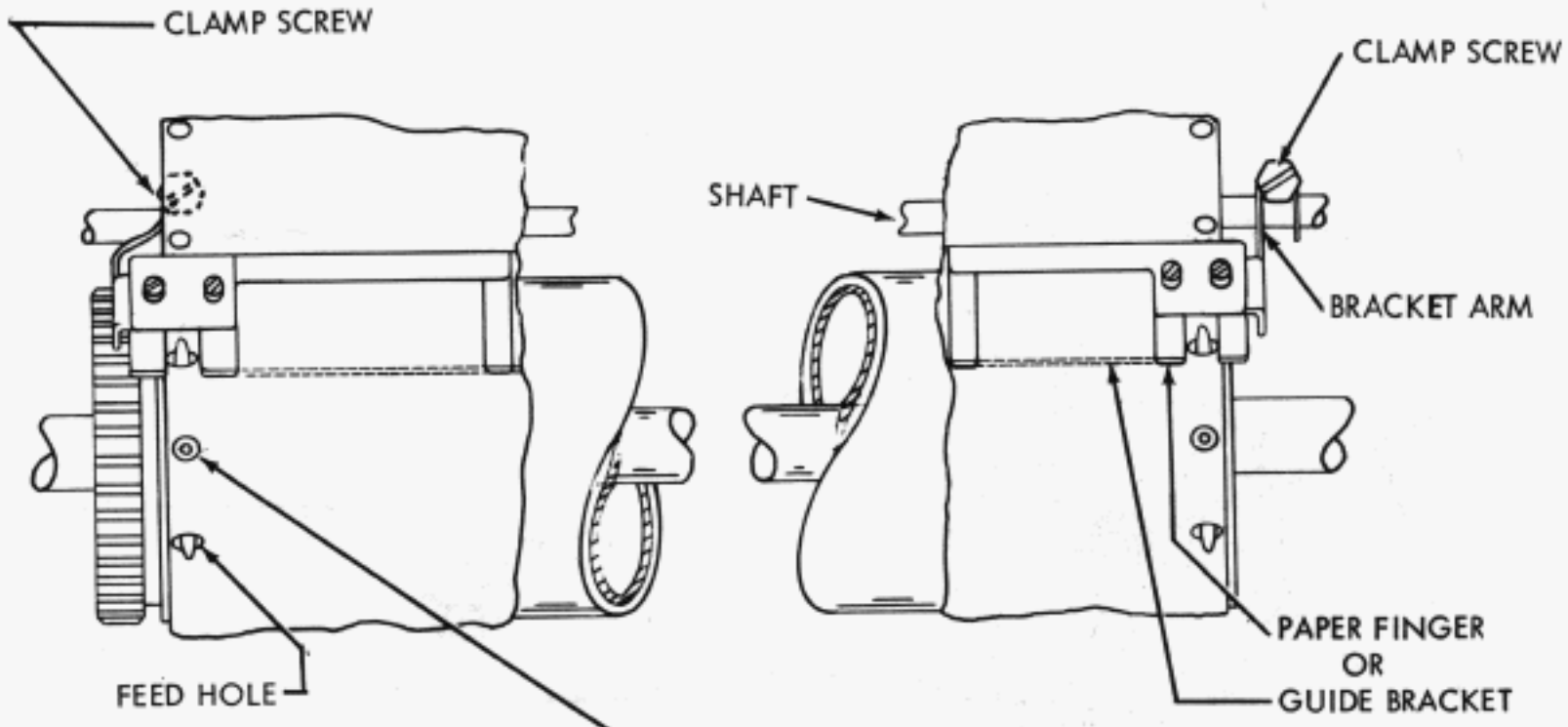

(1) REQUIREMENT

SPROCKET PIN SHOULD BE CENTRALLY LOCATED IN THE PAPER FINGER OR GUIDE BRACKET SLOT.

(2) REQUIREMENT *

THE GAP BETWEEN THE PLATEN AND THE PAPER FINGER OR GUIDE BRACKET SHOULD BE

	STAPLED MULTIPLE COPY	SINGLE COPY OR UNSTAPLED MULTIPLE COPY
MIN.	0.050 INCH	0.020 INCH
MAX.	0.105 INCH	0.060 INCH

TO ADJUST

WITH PAPER FINGER OR GUIDE BRACKET ASSEMBLY IN LATCHED POSITION, LOOSEN BOTH CLAMP SCREWS, POSITION ASSEMBLY HORIZONTALLY TO MEET REQUIREMENT (1). ROTATE ASSEMBLY TO MEET REQUIREMENT (2).

(3) REQUIREMENT (NOT ILLUSTRATED)

MIN. 0.035 INCH

BETWEEN LEADING EDGE OF PAPER FINGER OR GUIDE BRACKET AND RIBBON GUIDE. BOTH RIGHT AND LEFT PAPER FINGERS MUST BE PARALLEL TO THE SAME PRINTED LINE AS GAUGED BY EYE.

TO ADJUST

SELECT LETTERS COMBINATION AND ROTATE TYPE BOX CLUTCH 1/2 REVOLUTION. POSITION PAPER FINGERS BY MEANS OF ELONGATED MOUNTING HOLES. AFTER TIGHTENING THE SCREWS RECHECK THESE REQUIREMENTS.

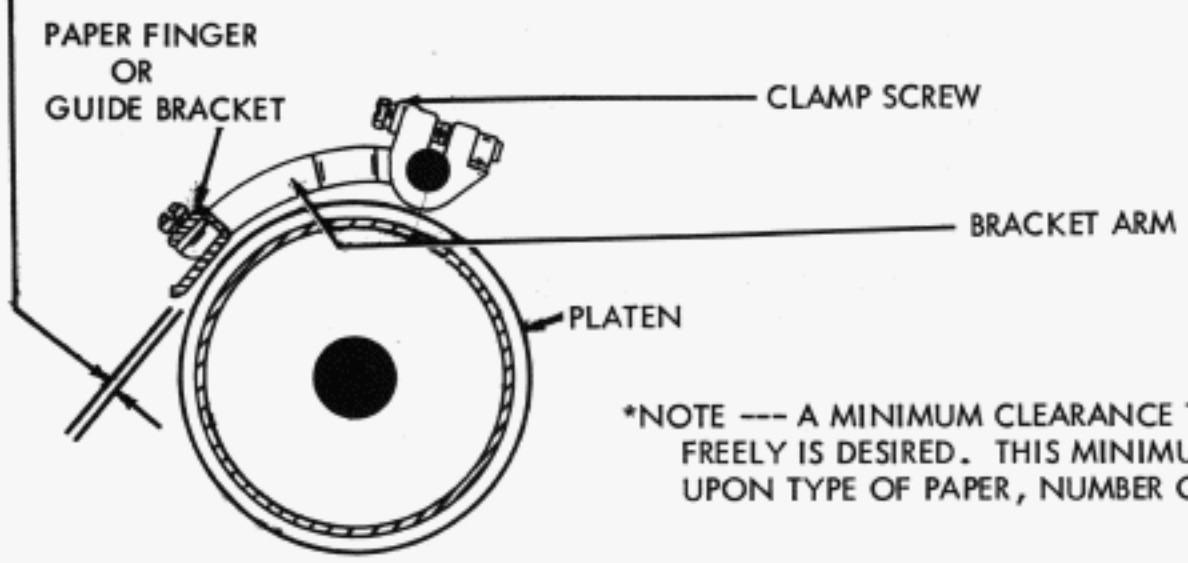

*NOTE --- A MINIMUM CLEARANCE THAT WILL PASS STATIONERY FREELY IS DESIRED. THIS MINIMUM VALUE IS DEPENDENT UPON TYPE OF PAPER, NUMBER OF COPIES, STAPLING ETC.

FIGURE 2-11 TYPING UNIT, PLATEN MECHANISM

5. SPROCKET FEED MECHANISM

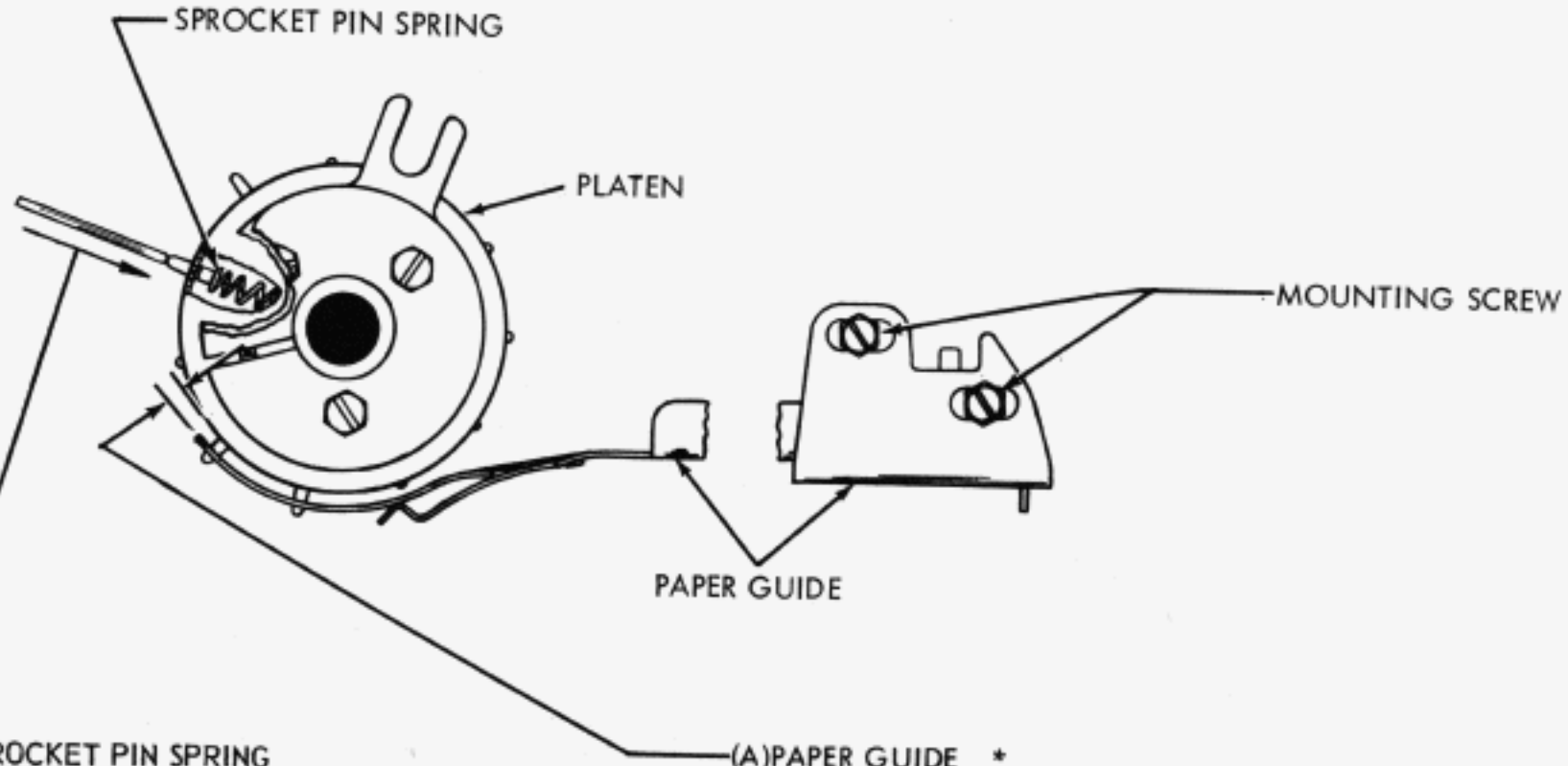

*NOTE --- A MINIMUM CLEARANCE THAT WILL PASS STATIONERY FREELY IS DESIRED. THIS MINIMUM VALUE IS DEPENDENT UPON TYPE OF PAPER, NUMBER OF COPIES, STAPLING ETC.

(C)RIBBON REVERSE SPUR GEAR
USE STANDARD ADJUSTMENT

(D)RIBBON REVERSE DETENT
USE STANDARD ADJUSTMENT

(E) LINE FEED BAR BELL CRANK SPRING
USE STANDARD ADJUSTMENT EXCEPT
MIN. 28 OZS.
MAX. 38 OZS.
TO START BAR MOVING.

FIGURE 2-12 TYPING UNIT, PLATEN AND PAPER TRAY

5. SPROCKET FEED MECHANISM

FRONT FORM GUIDE (CABINET)

REQUIREMENT

WITH TYPING UNIT IN CABINET AND LARGE AND SMALL DOORS LATCHED, CLEARANCE BETWEEN THE LOWER EDGE OF THE FRONT FORM GUIDE AND THE PLATEN SHOULD BE

MIN. 3/64 INCH

MAX. 5/64 INCH

TO ADJUST

LOOSEN THE FORM GUIDE MOUNTING SCREWS. PRESS THE PAPER GUIDE AGAINST THE PLATEN, THEN RAISE THE FORM GUIDE PARALLEL TO THE PLATEN.

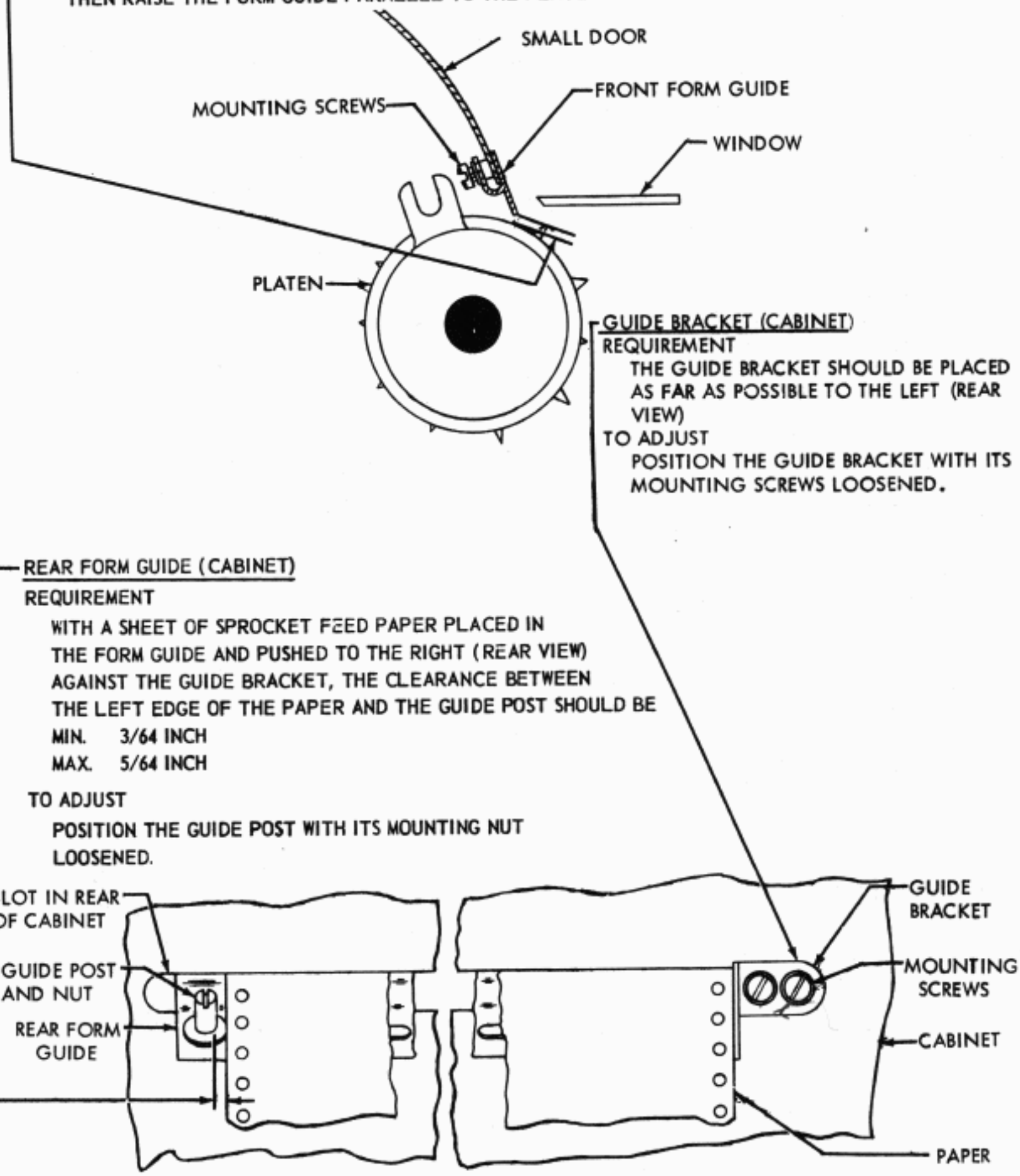

FIGURE 2-13 CABINET, FRONT AND REAR FORM GUIDES

5. SPROCKET FEED MECHANISM

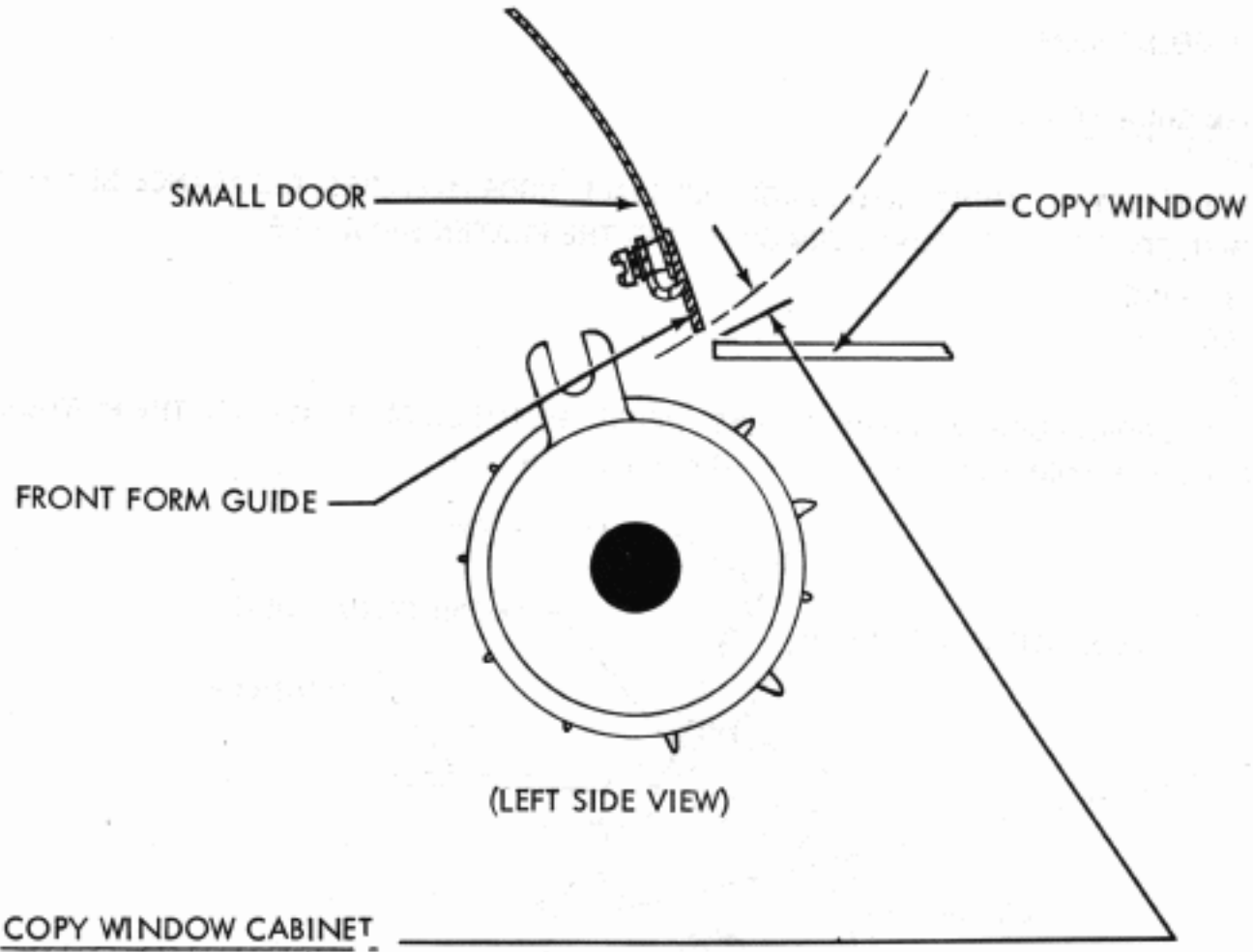

REQUIREMENT

SMALL DOOR OPEN AND POSITIONED SO THAT CLEARANCE BETWEEN FRONT FORM GUIDE AND WINDOW IS AT MINIMUM CLEARANCE.
MIN. 0.060 INCH
MAX. 0.080 INCH

TO ADJUST

POSITION WINDOW WITH FOUR WINDOW RETAINER MOUNTING SCREWS LOOSENED.

NOTE

IF STAPLED PAPER IS USED, STAPLES SHOULD PASS FREELY THROUGH SLOT. IF THEY DO NOT, INCREASE CLEARANCE AS REQUIRED.

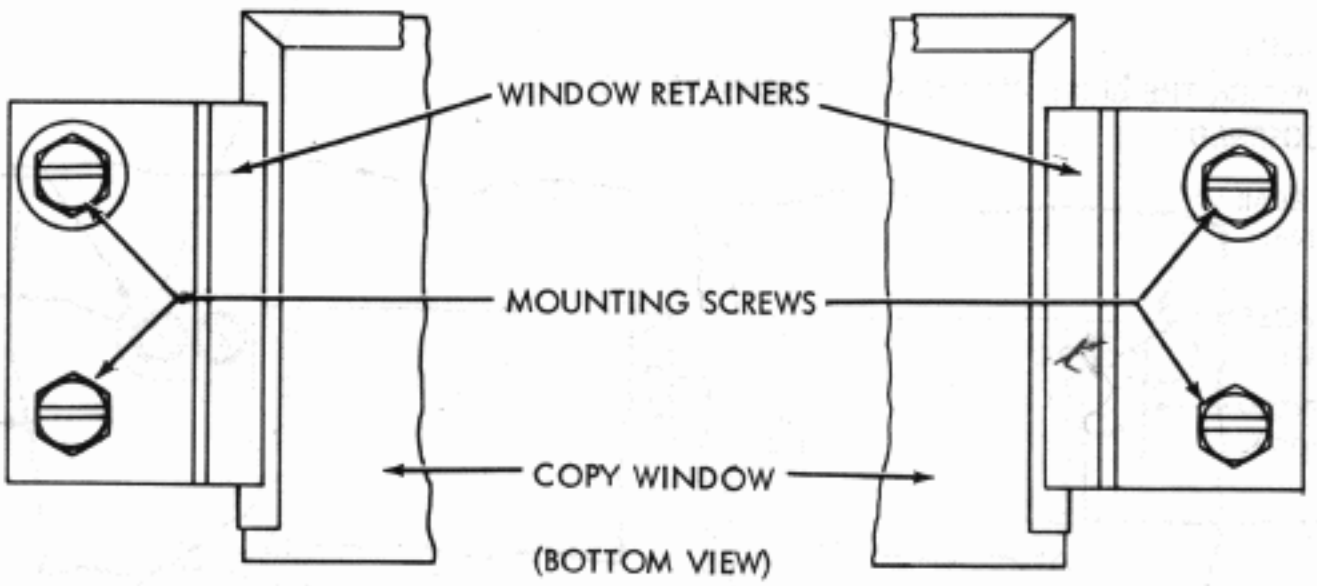

FIGURE 2-14. CABINET, FORM GUIDE AND COPY WINDOW

5. SPROCKET FEED MECHANISM

(A) PAPER FINGER OR GUIDE BRACKET SHAFT SPRING
REQUIREMENT
MIN. 6 OZS.
MAX. 10 OZS.
TO MOVE PAPER FINGER OR GUIDE BRACKET AGAINST THE PLATEN.

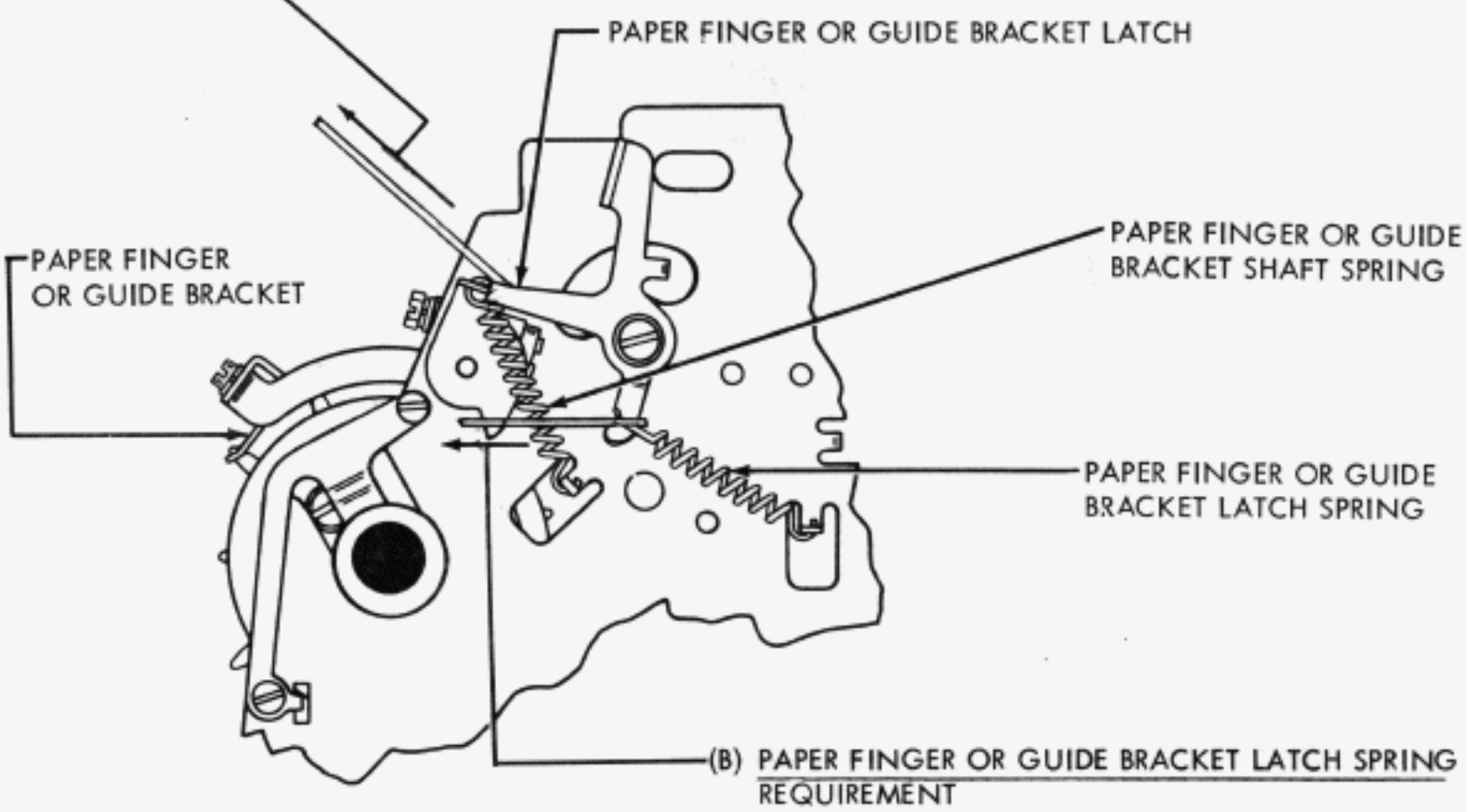

(B) PAPER FINGER OR GUIDE BRACKET LATCH SPRING
REQUIREMENT
PAPER FINGER OR GUIDE BRACKET AGAINST PLATEN
MIN. 8 OZS.
MAX. 12 OZS.
TO START LATCH MOVING.

NOTE
SPROCKET FEED MECHANISM WITH RETRACTABLE PINS

PAPER FINGER LOCKING ARM SPRING
REQUIREMENT --- IT SHALL REQUIRE
MIN 1 OZ --- MAX 1-1/2 OZS
TO MOVE ARM AWAY FROM PLATEN

PLATEN DETENT BAIL SPRING TENSION
USE STANDARD ADJUSTMENT (FIGURE 1-67)

FIGURE 2-15. TYPING UNIT, SPROCKET FEED MECHANISM

6. HORIZONTAL TABULATOR MECHANISM (NEW DESIGN)

NOTE: FOR EARLIER DESIGN SEE FIGURES 4-48 THROUGH 4-53.

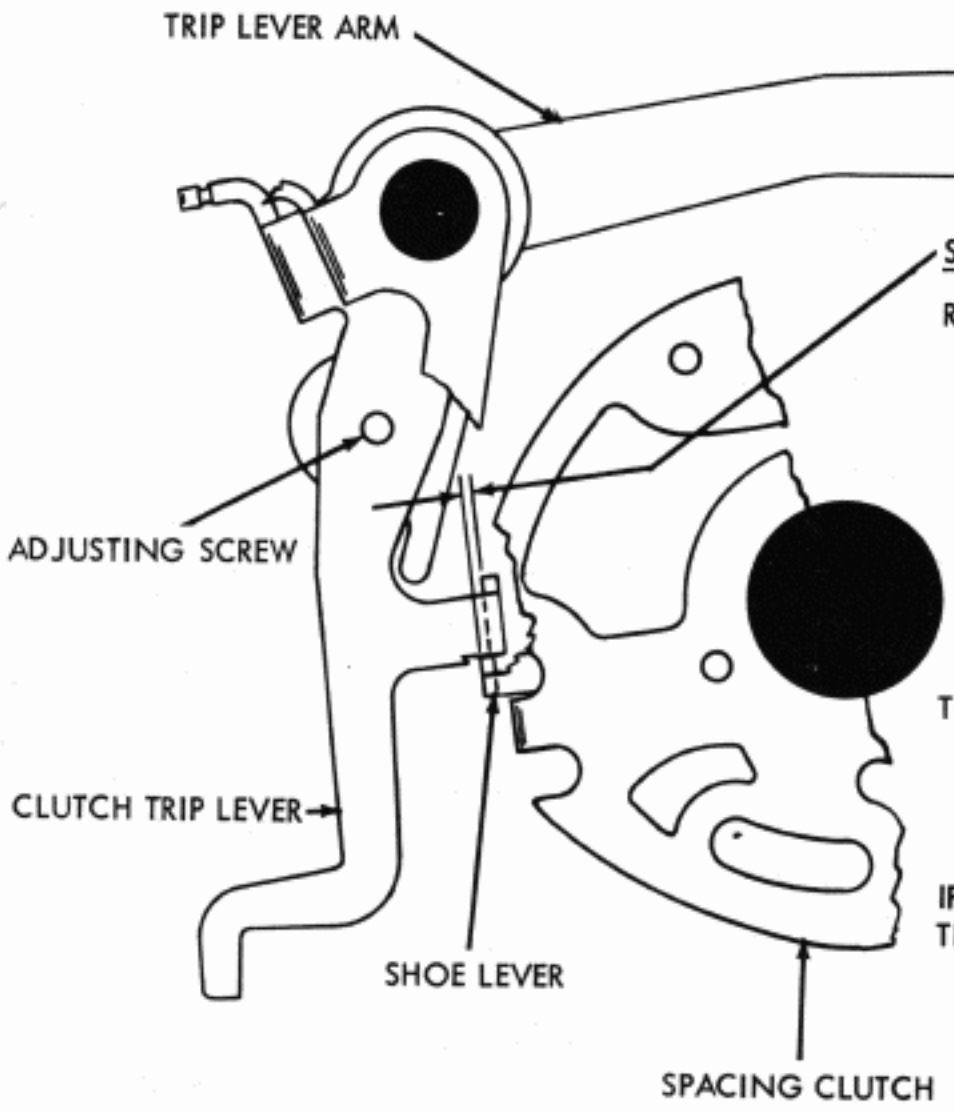

SPACING CLUTCH TRIP LEVER

REQUIREMENT

SPACING CLUTCH DISENGAGED. TRIP LEVER ARM AND INTERMEDIATE BAIL IN THEIR UPWARD POSITION. THE OUTER SURFACE OF THE TRIP LEVER SHOULD BE FLUSH WITH THE OUTER SURFACE OF THE SHOE LEVER OR UNDER FLUSH TO .010 INCH. CHECK AT STOP LUG WITH LEAST BITE.

TO ADJUST

USE ADJUSTING SCREW TO POSITION SPACING CLUTCH TRIP LEVER.

NOTE

IF THIS ADJUSTMENT IS CHANGED, CHECK THE LATCH BAIL ADJUSTING PLATE - FIG. 2-18

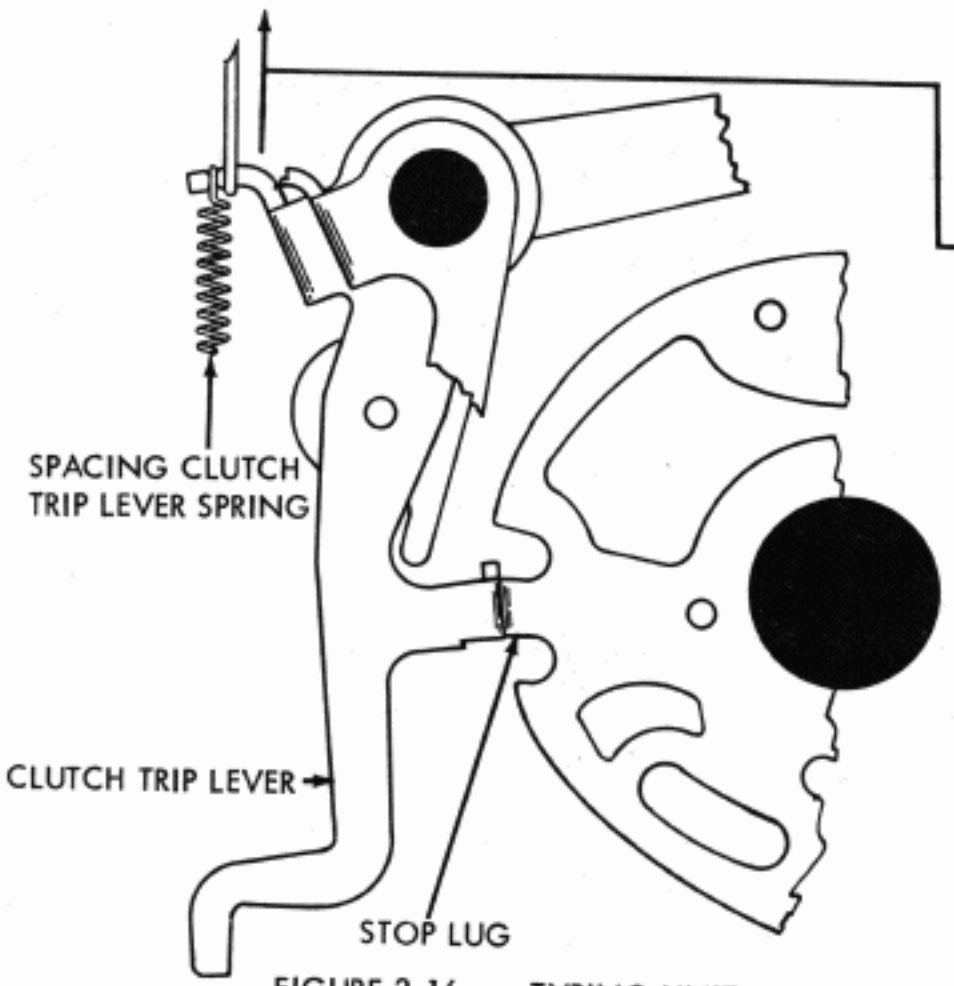

CLUTCH TRIP LEVER SPRING TENSION

REQUIREMENT

SPACING CLUTCH ENGAGED. ROTATE CLUTCH UNTIL TRIP LEVER RESTS ON STOP LUG.

MIN. 11 OZS.
MAX. 16 OZS.

TO MOVE TRIP LEVER AWAY FROM STOP LUG.

FIGURE 2-16. TYPING UNIT, HORIZONTAL TABULATING MECHANISM, LEFT VIEW

6. HORIZONTAL TABULATOR MECHANISM

OPERATING LEVER SLIDE ARM

NOTE
PRIOR TO THIS ADJUSTMENT CHECK THE FUNCTION RESET BAIL BLADE ADJUSTMENT.

REQUIREMENT
ON UNITS WITH TWO-STOP FUNCTION CLUTCHES. FUNCTION CLUTCH DISENGAGED. TYPE BOX CLUTCH ROTATED 1/2 REVOLUTION PAST STOP POSITION. ON UNITS WITH ONE-STOP FUNCTION CLUTCH, ROTATE FUNCTION CLUTCH UNTIL FUNCTION PAWL STRIPPER BLADE IS IN ITS LOWER POSITION AND THE FUNCTION RESET BAIL ROLLER IS ON THE HIGH PART OF ITS CAM. HORIZONTAL TABULATOR FUNCTION PAWL PULLED TO REAR UNTIL LATCHED ON ITS FUNCTION BAR. CLEARANCE BETWEEN FRONT END OF OPERATING LEVER SLIDE ARM AND BLOCKING SURFACE OF BLOCKING LEVER

MIN. 0.015 INCH
MAX. 0.035 INCH

TO ADJUST
POSITION SLIDE ARM ON OPERATING LEVER WITH MOUNTING STUD FRICTION TIGHT.

NOTE
WHEN PULLING FUNCTION PAWL TO THE REAR, IF THE OPERATING LEVER CAM ARM SHOULD BE STRIPPED OFF THE TABULATOR SLIDE ARM BEFORE THE FUNCTION PAWL IS LATCHED ON THE FUNCTION BAR, TEMPORARILY DISABLE THE STRIPPER BAIL ARM BY LOOSENING ITS ADJUSTING SCREW.

OPERATING LEVER SLIDE ARM SPRING

REQUIREMENT
TRIP LEVER ARM LATCH BAIL SPRING UNHOOKED. OPERATING LEVER IN OPERATED POSITION WITH SLIDE ARM AGAINST BLOCKING LEVER.

MIN. 8-3/4 OZS.
MAX. 10-3/4 OZS.
TO START LINK MOVING.

NOTE
ON UNITS EQUIPPED WITH TRANSMITTER CONTROL CONTACT, HOLD CONTACT SPRING AWAY FROM STUD WHEN MEASURING TENSION.

OPERATING LEVER ADJUSTING PLATE

REQUIREMENT
OPERATING LEVER IN UNOPERATED POSITION. TAKE UP PLAY IN SLIDE ARM AND BLOCKING LEVER TO MINIMIZE CLEARANCE. CLEARANCE BETWEEN FRONT END OF SLIDE ARM AND LOWER PROJECTION OF BLOCKING LEVER

MIN. 0.020 INCH
MAX. 0.045 INCH

TO ADJUST
POSITION ADJUSTING PLATE ON BRACKET WITH MOUNTING SCREWS LOOSENED.

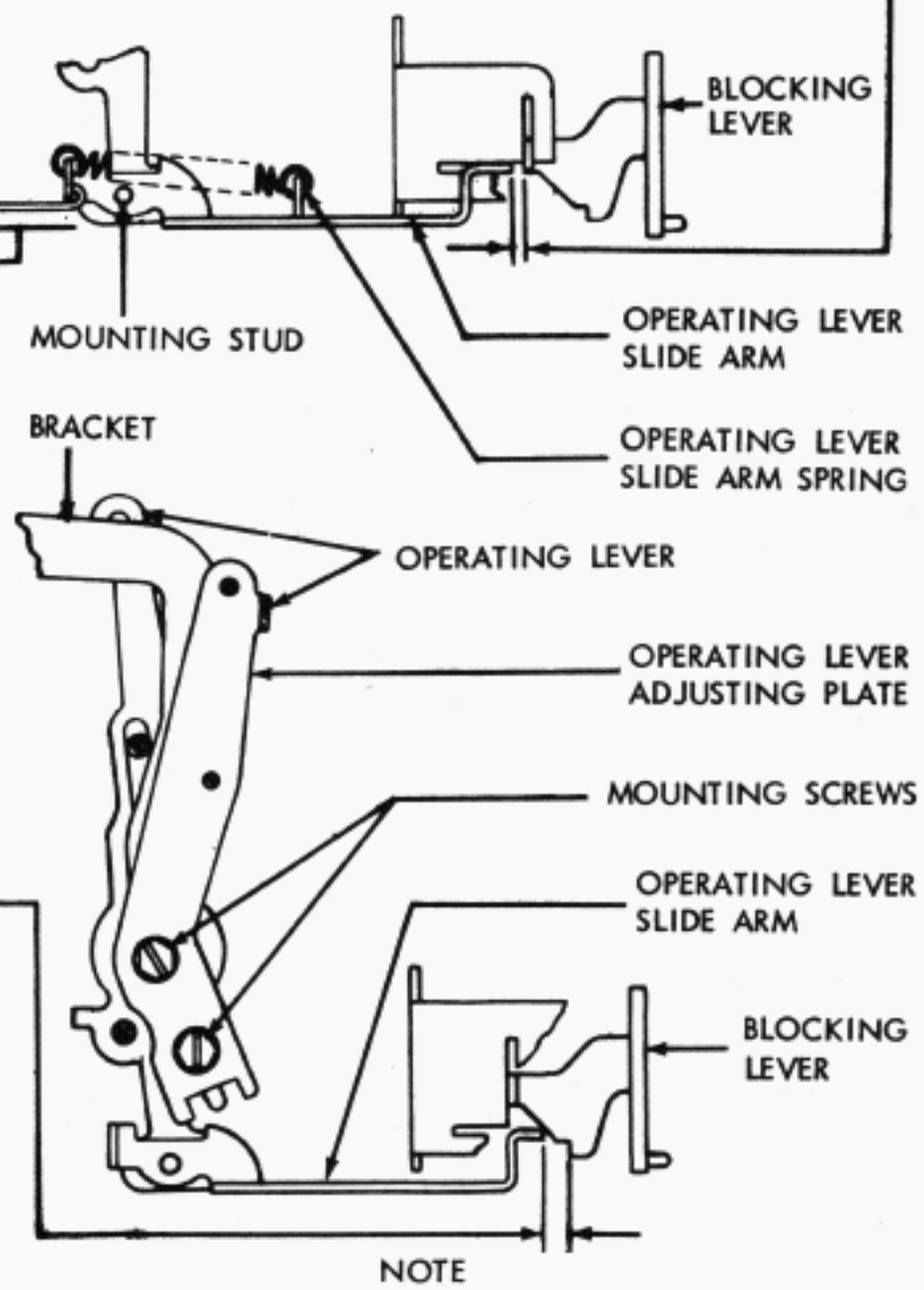

NOTE
IF OPERATING LEVER SLIDE ARM OR OPERATING LEVER ADJUSTING PLATE ADJUSTMENT IS CHANGED ON UNITS EQUIPPED WITH TRANSMITTER CONTROL CONTACT, CHECK CONTROL CONTACT GAP AND REMAKE IF NECESSARY.

FIGURE 2-17. TYPING UNIT, HORIZONTAL TABULATOR MECHANISM, LEFT VIEW

6. HORIZONTAL TABULATOR MECHANISM

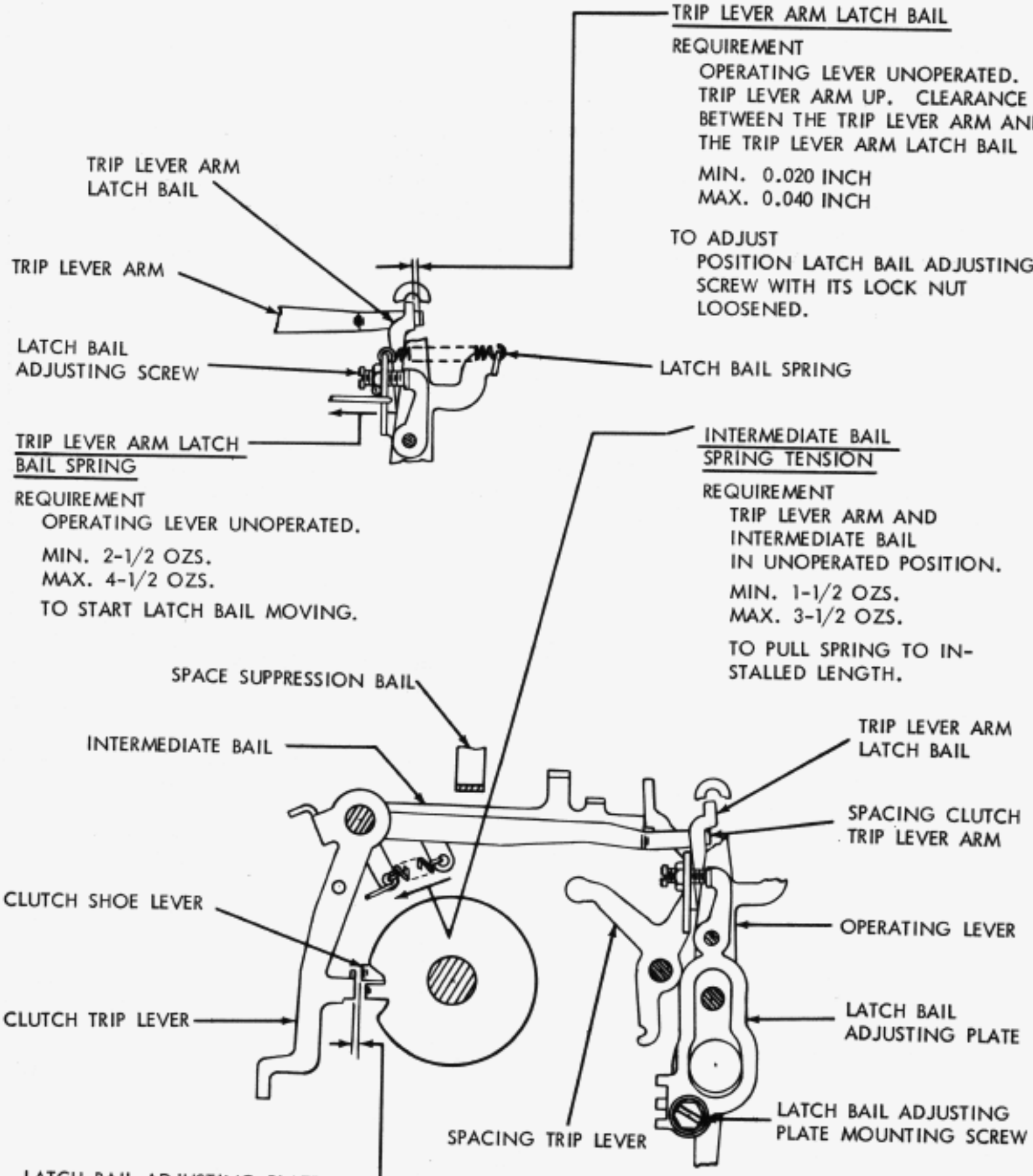

TRIP LEVER ARM LATCH BAIL

REQUIREMENT
OPERATING LEVER UNOPERATED. TRIP LEVER ARM UP. CLEARANCE BETWEEN THE TRIP LEVER ARM AND THE TRIP LEVER ARM LATCH BAIL

MIN. 0.020 INCH
MAX. 0.040 INCH

TO ADJUST
POSITION LATCH BAIL ADJUSTING SCREW WITH ITS LOCK NUT LOOSENED.

TRIP LEVER ARM LATCH BAIL SPRING

REQUIREMENT
OPERATING LEVER UNOPERATED.

MIN. 2-1/2 OZS.
MAX. 4-1/2 OZS.

TO START LATCH BAIL MOVING.

INTERMEDIATE BAIL SPRING TENSION

REQUIREMENT
TRIP LEVER ARM AND INTERMEDIATE BAIL IN UNOPERATED POSITION.

MIN. 1-1/2 OZS.
MAX. 3-1/2 OZS.

TO PULL SPRING TO INSTALLED LENGTH.

LATCH BAIL ADJUSTING PLATE

REQUIREMENT
OPERATING LEVER SLIDE ARM POSITIONED TO REAR AND LATCHED ON BLOCKING LEVER. TRIP LEVER ARM LATCH BAIL IN FULLY LATCHED POSITION. SPACING TRIP LEVER DISENGAGED FROM INTERMEDIATE BAIL BY PUSHING FORWARD ON SPACE SUPPRESSION BAIL. CLEARANCE BETWEEN CLUTCH TRIP LEVER AND CLUTCH SHOE LEVER

MIN. SOME
MAX. 0.008 INCH

TO ADJUST
POSITION LATCH BAIL ADJUSTING PLATE WITH MOUNTING SCREWS LOOSENED. CHECK AT THE CLUTCH SHOE LEVER WITH THE LEAST CLEARANCE.

FIGURE 2-18. TYPING UNIT, HORIZONTAL TABULATOR MECHANISM (LEFT VIEW)

6. HORIZONTAL TABULATOR MECHANISM

HORIZONTAL TABULATOR SLIDE ARM SPRING

REQUIREMENT
OPERATING LEVER IN OPERATED POSITION. SLIDE ARM IN UNOPERATED POSITION.

MIN. 1 OZ.
MAX. 4 OZS.

TO START SLIDE ARM MOVING.

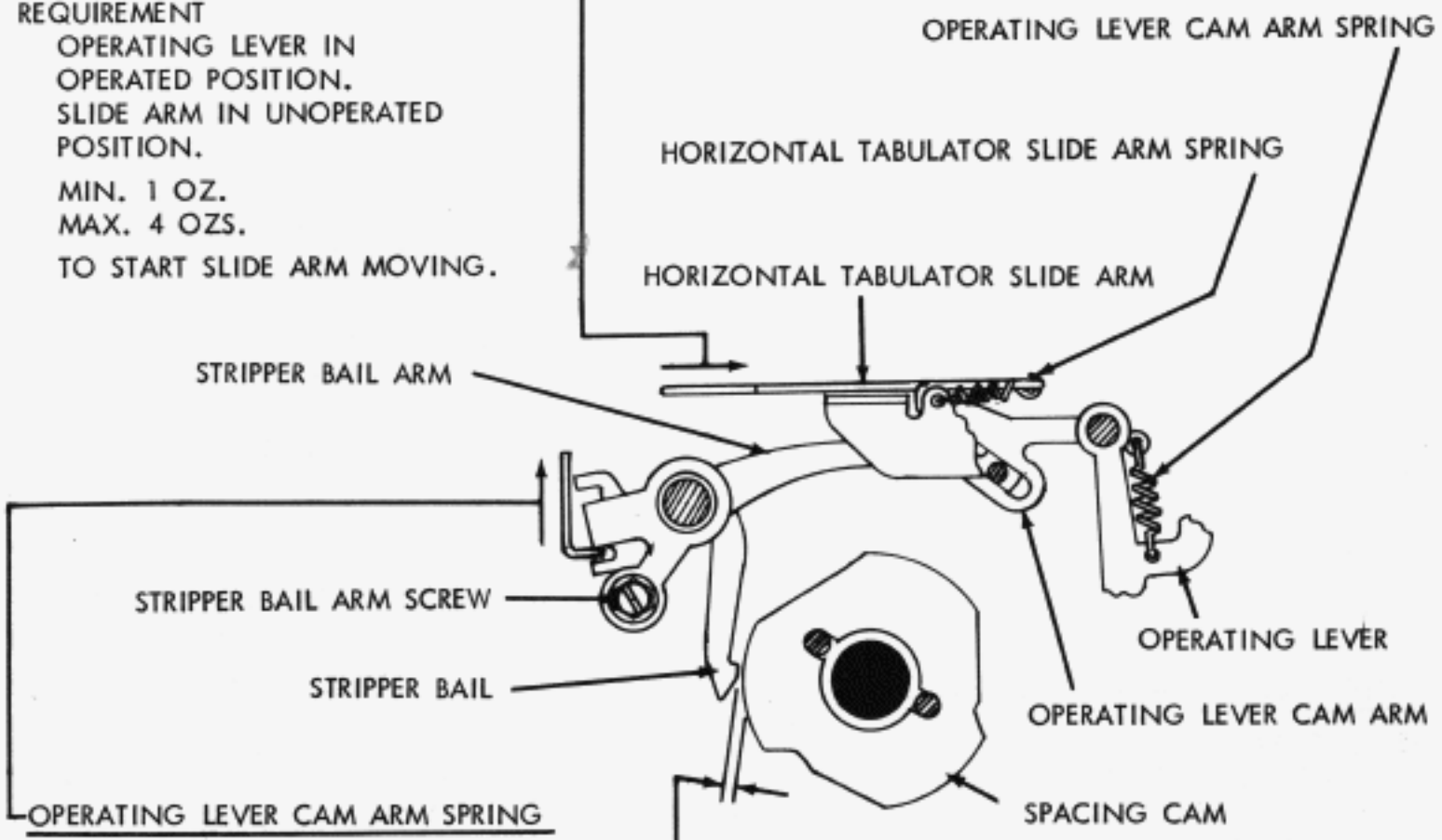

(LEFT SIDE VIEW)

OPERATING LEVER CAM ARM SPRING

REQUIREMENT
OPERATING LEVER IN UNOPERATED POSITION. HORIZONTAL TABULATOR FUNCTION PAWL UNLATCHED.

MIN. 4 OZS.
MAX. 9 OZS.

TO START STRIPPER BAIL MOVING.

CAM ARM STRIPPER BAIL

REQUIREMENT
OPERATING LEVER AND TABULATOR SLIDE ARM IN UNOPERATED POSITIONS. SPACING CLUTCH ROTATED UNTIL HIGH PART OF SPACING CAM IS OPPOSITE STRIPPER BAIL. CLEARANCE BETWEEN SPACING CAM AND STRIPPER BAIL

MIN. 0.010 INCH
MAX. 0.025 INCH

TO ADJUST
POSITION STRIPPER BAIL ARM ON STRIPPER BAIL WITH STRIPPER BAIL ARM SCREW FRICTION TIGHT.

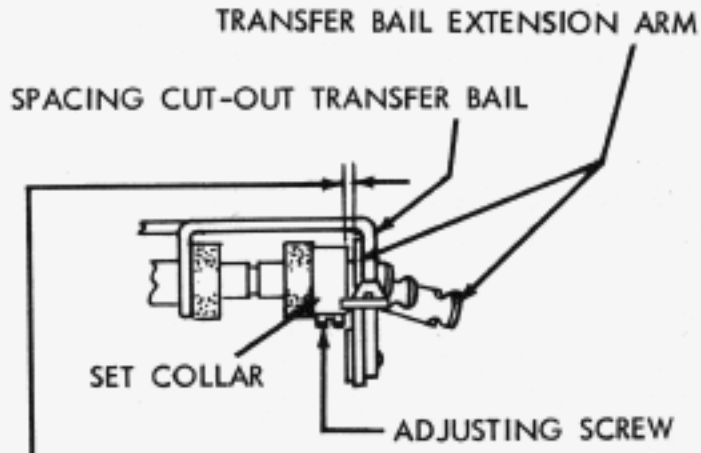

(BOTTOM VIEW)

SPACING CUT-OUT TRANSFER BAIL SET COLLAR

REQUIREMENT
TRANSFER BAIL SHOULD HAVE SOME END PLAY.

MAX. 0.008 INCH

TO ADJUST
POSITION SET COLLAR WITH ADJUSTING SCREW LOOSENED.

FIGURE 2-19. TYPING UNIT, HORIZONTAL TABULATOR MECHANISM

6. HORIZONTAL TABULATOR MECHANISM

SPACE SUPPRESSION BY-PASS SPRING

REQUIREMENT
MIN. 20 OZS.
MAX. 26 OZS.
TO START BAIL EXTENSION MOVING

RIGHT MARGIN

REQUIREMENT
CLEARANCE BETWEEN SPACING CUT-OUT LEVER ON SPACING DRUM AND BAIL EXTENSION ARM
MIN. 0.006 INCH
MAX. 0.025 INCH

TO CHECK
PLACE TYPE BOX IN POSITION TO PRINT CHARACTER ON WHICH SPACING CUT-OUT IS DESIRED. PULL FORWARD ON PART OF TRANSFER BAIL EXTENDING BELOW MOUNTING SHAFT UNTIL BAIL IS IN FULLY OPERATED POSITION. GAGE CLEARANCE.

TO ADJUST
POSITION CUT-OUT LEVER WITH CLAMP SCREW LOOSENED.

NOTE
FOUR SCREWS MUST BE LOOSENED TO ADJUST CIRCULAR CUT-OUT LEVERS. DO NOT LOOSEN HEX. HEAD SCREW THAT CLAMPS FRONT RING.

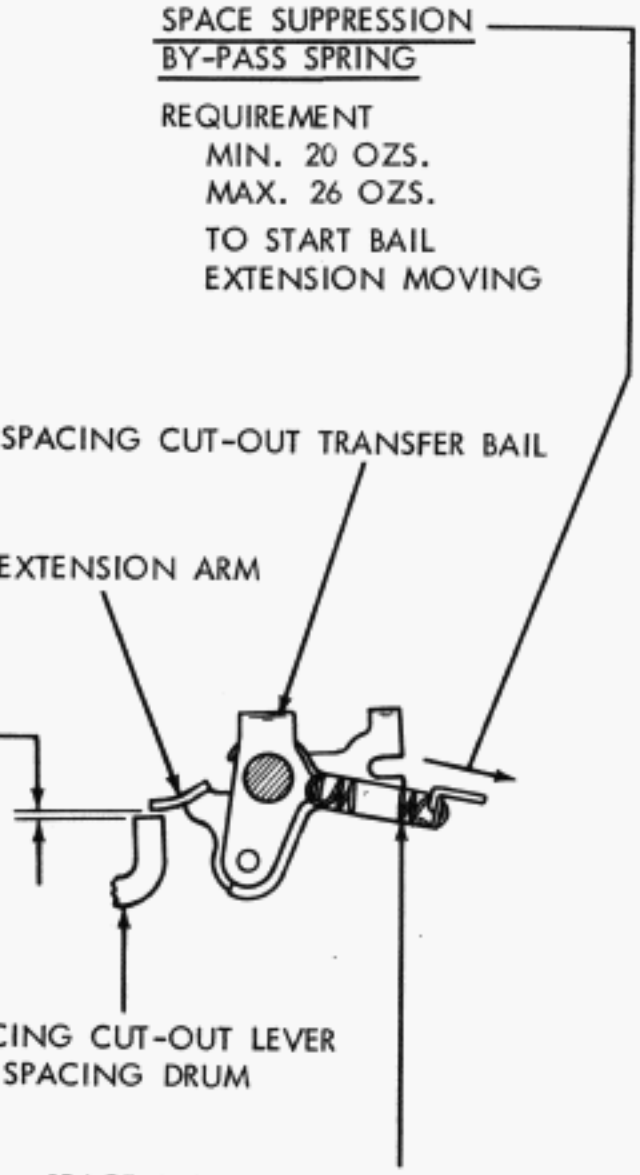

(RIGHT SIDE VIEW)

FIGURE 2-20 TYPING UNIT, HORIZONTAL TABULATOR MECHANISM

6. HORIZONTAL TABULATOR MECHANISM

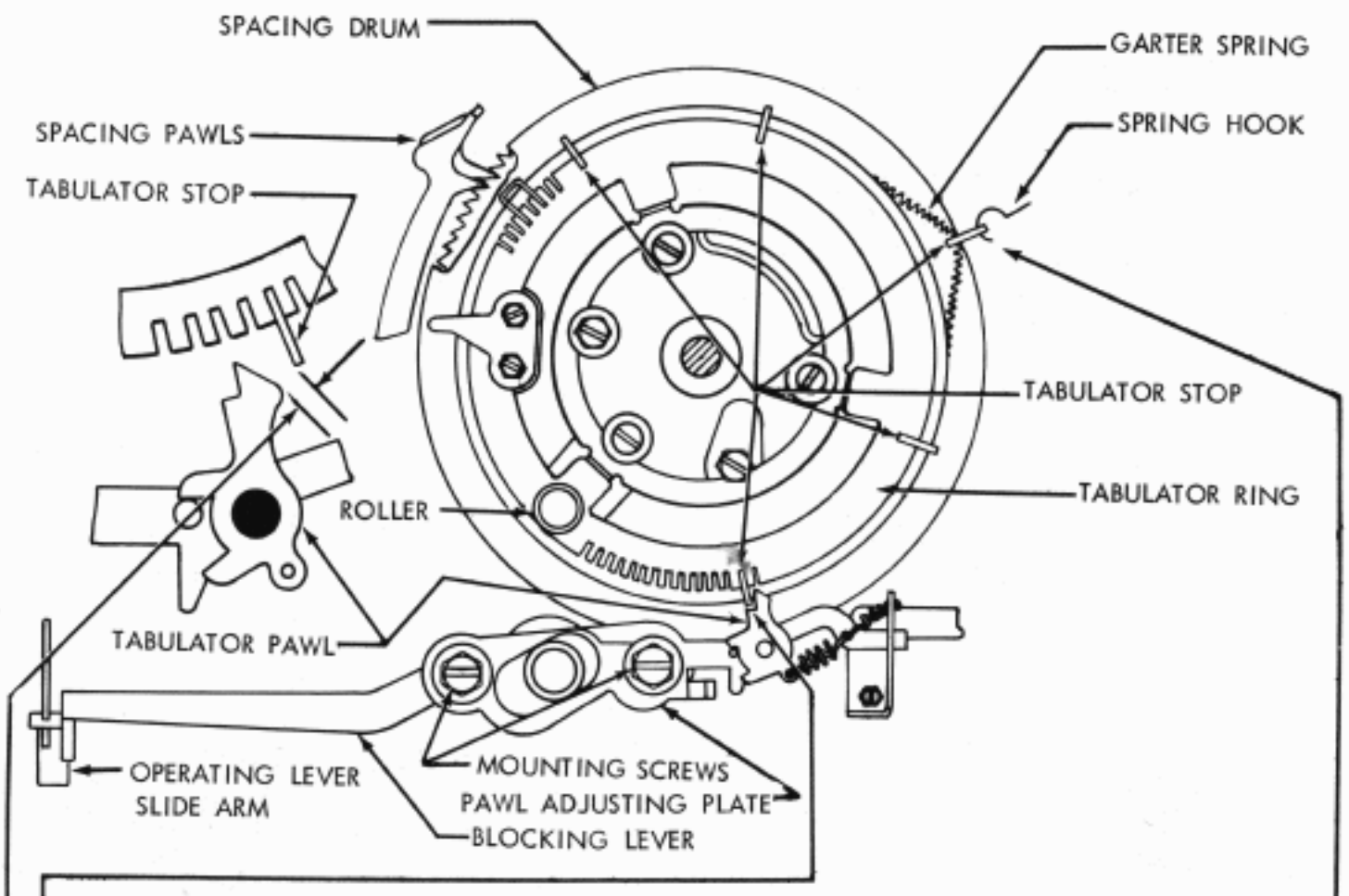

TABULATOR PAWL (PRELIMINARY)

NOTE:
BEFORE MAKING THIS ADJUSTMENT, CHECK LEFT MARGIN AND SPACING GEAR PHASING ADJUSTMENTS.

PURPOSE
TO SELECT TABULATOR STOP TO BE USED AS REFERENCE IN MAKING FINAL TABULATOR PAWL HORIZONTAL AND VERTICAL ADJUSTMENTS.

PROCEDURE

(1) BEGINNING WITH 15TH SLOT COUNTERCLOCKWISE FROM ROLLER ON TABULATOR RING, PLACE TABULATOR STOPS APPROXIMATELY AN EQUAL NUMBER OF SLOTS APART AROUND REMAINING SLOTTED PERIPHERY OF RING CORRESPONDING TO LENGTH OF PRINTED LINE.

(2) TO MOVE STOPS, HOOK SMALL SPRING HOOK IN HOLE AND PULL OUT RADIALLY FROM DRUM. HOLDING STOP AWAY FROM DRUM, SLIDE IT ON GARTER SPRING TO DESIRED LOCATION AND INSERT IN SLOT. SPACING DRUM MAY HAVE TO BE ROTATED TO MAKE SOME SLOTS ACCESSIBLE. CAUTION: MAKE SURE ALL STOPS ARE FIRMLY SEATED AND NOT TURNED SIDEWAYS.

(3) DISENGAGE ALL CLUTCHES SO FRONT SPACING FEED PAWL IS IN LOWER POSITION. PLACE PAWL ADJUSTING PLATE AT CENTER OF HORIZONTAL AND VERTICAL ADJUSTMENT: TO ADJUST VERTICALLY, LOOSEN BOTH MOUNTING SCREWS; TO ADJUST HORIZONTALLY, LOOSEN ONLY LEFT SCREW. HORIZONTAL ADJUSTMENT SHOULD BE MADE AFTER VERTICAL. DISENGAGE SPACING FEED PAWLS AND ALLOW DRUM TO ROTATE TO EXTREME COUNTERCLOCKWISE POSITION. KEEPING SPACING CLUTCH DISENGAGED, MANUALLY ADVANCE DRUM UNTIL FIRST STOP IS IMMEDIATELY TO LEFT OF PAWL. POSITION ADJUSTING PLATE HORIZONTALLY SO THAT STOP IS ALIGNED WITH LEFT EDGE OF PAWL SHOULDER.

(4) PLACE BLOCKING LEVER AND OPERATING LEVER SLIDE ARM IN UNBLOCKED POSITION. DISENGAGE FEED PAWLS AND LET DRUM ROTATE TWO SPACES COUNTERCLOCKWISE. BOTH FEED PAWLS SHOULD BE FULLY ENGAGED. BLOCK SLIDE ARM WITH BLOCKING LEVER. GAGE AND NOTE CLEARANCE BETWEEN STOP AND SLOPE ON PAWL.

(5) ROTATE DRUM CLOCKWISE UNTIL NEXT STOP IS JUST TO LEFT OF PAWL. REPEAT PROCEDURE DESCRIBED IN PARAGRAPH (4) FOR THIS STOP. REPEAT PROCEDURE FOR REMAINING STOPS, NOTING EACH CLEARANCE.

(6) STOP WITH MAXIMUM CLEARANCE SHOULD BE USED AS REFERENCE IN MAKING FINAL HORIZONTAL AND VERTICAL PAWL ADJUSTMENTS.

FIGURE 2-21 TYPING UNIT, HORIZONTAL TABULATOR MECHANISM, FRONT VIEW

6. HORIZONTAL TABULATOR MECHANISM

TABULATOR PAWL - VERTICAL (FINAL)

TO CHECK

POSITION SPACING DRUM SUCH THAT REFERENCE TABULATOR STOP, AS DETERMINED BY PRELIMINARY TABULATOR PAWL ADJUSTMENT (FIG. 2-21), IS OPPOSITE SHOULDER ON PAWL. BLOCK OPERATING LEVER SLIDE ARM WITH BLOCKING LEVER.

REQUIREMENT

CLEARANCE BETWEEN PAWL AND STOP:
MIN. 0.055 INCH MAX. 0.075 INCH

TO ADJUST

POSITION PAWL ADJUSTING PLATE WITH BOTH MOUNTING SCREWS LOOSENED. TIGHTEN RIGHT SCREW ONLY, USING WRENCH TO PREVENT BUSHING FROM TURNING.

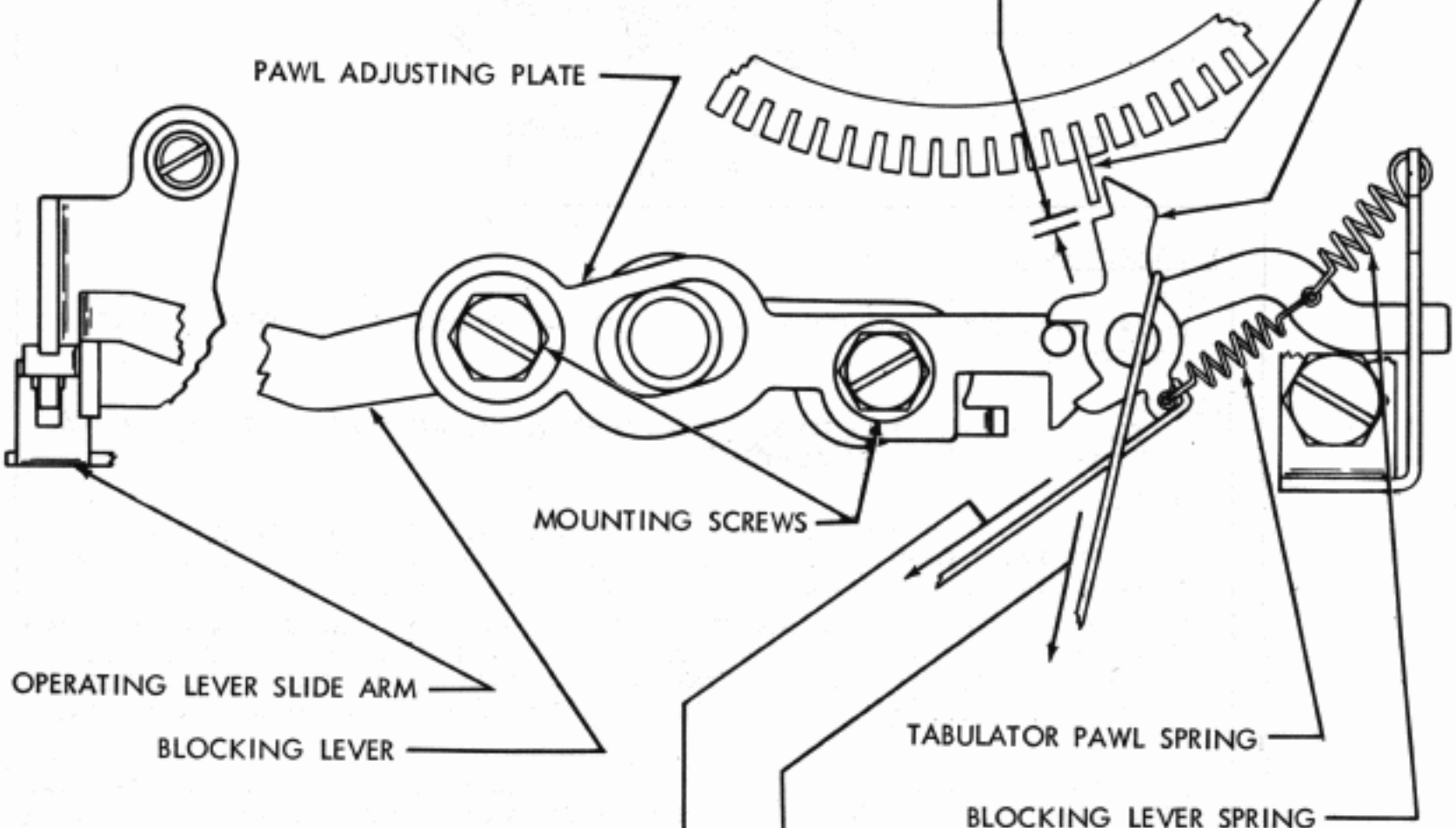

TABULATOR PAWL SPRING

REQUIREMENT

MIN. 3 OZS. MAX. 5 OZS.
TO START PAWL MOVING.

BLOCKING LEVER SPRING

TO CHECK

HOLD OPERATING LEVER SLIDE ARM TO THE REAR.

REQUIREMENT

MIN. 2 1/2 OZS. MAX. 4 1/2 OZS.
TO START BLOCKING LEVER MOVING.

FIGURE 2-22 TYPING UNIT, HORIZONTAL TABULATOR MECHANISM, FRONT VIEW

6. HORIZONTAL TABULATOR MECHANISM

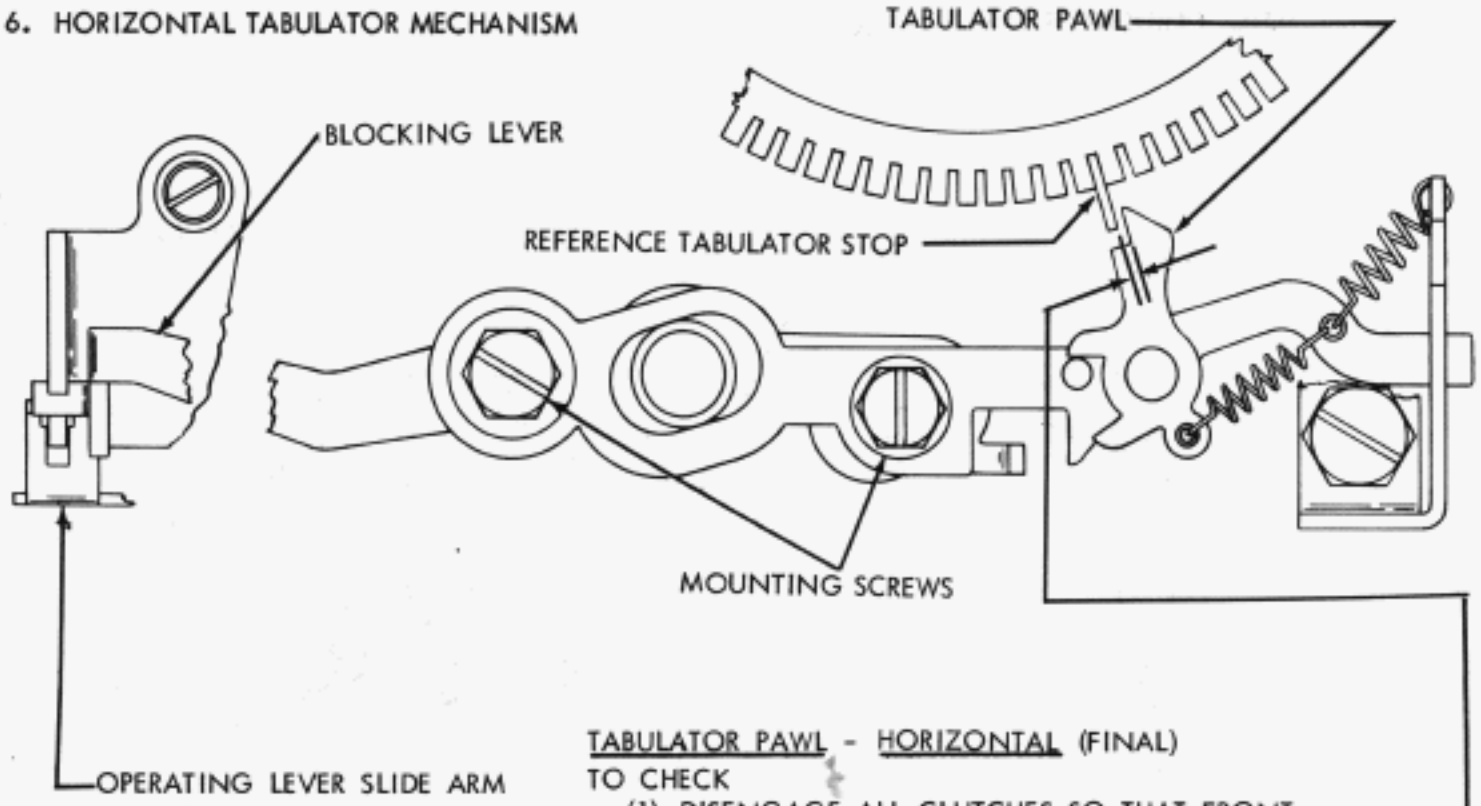

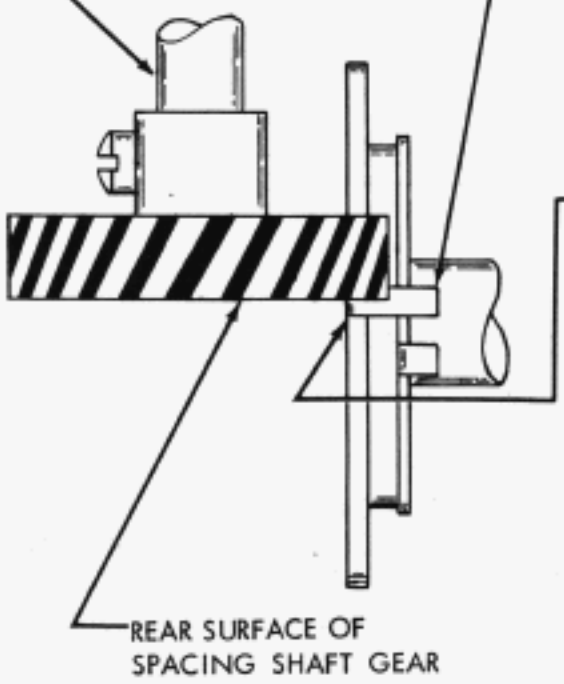

(BOTTOM VIEW)

TABULATOR PAWL - HORIZONTAL (FINAL)

TO CHECK

(1) DISENGAGE ALL CLUTCHES SO THAT FRONT SPACING FEED PAWL IS IN LOWER POSITION (AS SHOWN IN FIG. 2-21). POSITION SPACING DRUM SO THAT REFERENCE TABULATOR STOP, AS DETERMINED IN PRELIMINARY TABULATOR PAWL ADJUSTMENT (FIG. 2-21), IS IMMEDIATELY TO LEFT OF PAWL. OPERATING LEVER SLIDE ARM SHOULD BE FORWARD IN UNBLOCKED POSITION. DISENGAGE FEED PAWLS AND ALLOW DRUM TO ROTATE ONE SPACE COUNTER-CLOCKWISE. BOTH FEED PAWLS SHOULD BE FULLY ENGAGED. MOVE SLIDE ARM TO REAR TO BLOCKED POSITION.

(2) TRIP SPACING CLUTCH STOP LEVER AND SLOWLY ROTATE MAIN SHAFT UNTIL BLOCKING LEVER IS JUST TRIPPED. TAKE UP PLAY IN SPACING SHAFT TOWARD REAR.

REQUIREMENT

SOME PORTION OF CLUTCH DISK STOP LUG SHOULD BE ALIGNED WITH REAR SURFACE OF SPACING SHAFT GEAR.

TO ADJUST

REPEAT PROCEDURE SET FORTH IN PARAGRAPH (1) ABOVE. TRIP SPACING CLUTCH AND ROTATE SHAFT UNTIL MIDDLE OF STOP LUG IS IN LINE WITH REAR SURFACE OF GEAR. IF BLOCKING LEVER TRIPPED TOO SOON, WITH LEFT MOUNTING SCREW LOOSENED, POSITION PAWL ADJUSTING PLATE TO LEFT UNTIL SLIDE ARM CAN BE BLOCKED. SLOWLY MOVE PLATE TO RIGHT UNTIL BLOCKING LEVER JUST TRIPS. WHEN ADJUSTING TRIP-OFF POINT, CARE SHOULD BE TAKEN THAT BLOCKING LEVER IS CAMMED DOWN BY STOP AND NOT MANUALLY MOVED OUT OF BLOCKED POSITION BY ACCIDENT. RECHECK REQUIREMENT.

NOTE:

AFTER OBTAINING TRIP-OFF POINT, CONTINUE ROTATING MAIN SHAFT UNTIL SPACING CLUTCH IS DISENGAGED. PAWL SHOULD BE TO RIGHT OF STOP. WHEN SLIDE ARM IS MOVED TO REAR, BLOCKING LEVER SHOULD MOVE TO BLOCKED POSITION. IF TIP OF PAWL SHOULD REST ON END OF STOP, READJUST PLATE TO RIGHT SO THAT CLEARANCE BETWEEN PAWL AND STOP IS:

MIN. 0.003 MAX. 0.008

FIGURE 2-23 TYPING UNIT, HORIZONTAL TABULATOR MECHANISM, FRONT VIEW

6. HORIZONTAL TABULATOR MECHANISM

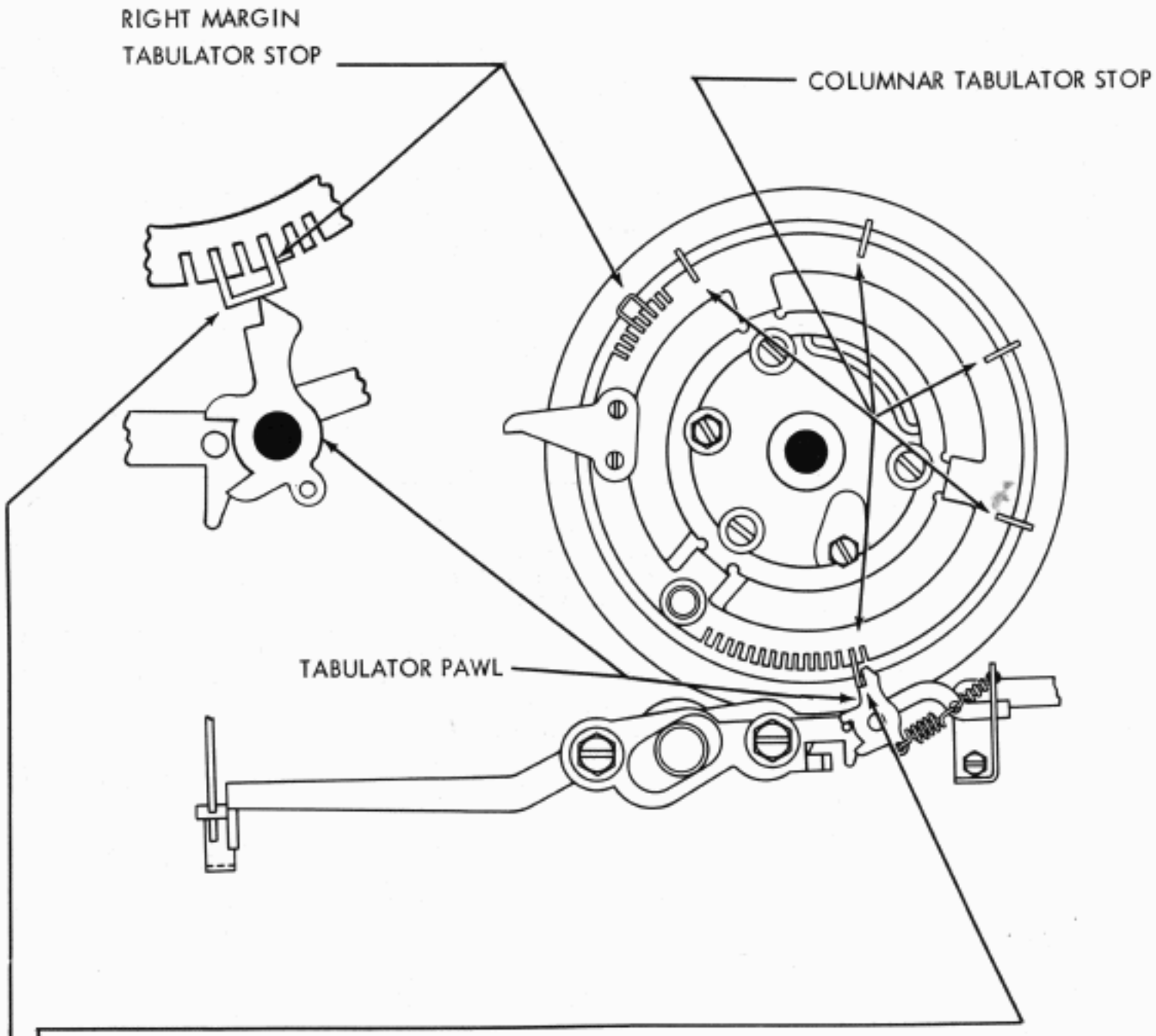

TABULATOR STOP SETTINGS

NOTE:
FOR INSTRUCTIONS ON HOW TO MOVE TABULATOR STOPS, SEE TABULATOR PAWL PRELIMINARY ADJUSTMENT. FIGURE 2-21, PARAGRAPH 2

(1) COLUMNAR TABULATOR STOPS

PLACE CARRIAGE IN POSITION TO PRINT FIRST CHARACTER IN COLUMN. PLACE STOP IN SLOT IMMEDIATELY TO LEFT OF PAWL. TO FACILITATE INSERTING STOPS, MARK DESIRED SLOT AND ROTATE DRUM TO MORE ACCESSIBLE POSITION. FOR SETTINGS NEAR LEFT MARGIN, COUNT NUMBER OF SPACING OPERATIONS FROM LEFT MARGIN AND PLACE STOP CORRESPONDING NUMBER OF SLOTS COUNTERCLOCKWISE FROM ROLLER.

NOTE: WHEN PRINTING FORMS, CHECK STOP SETTINGS IN RELATION TO COLUMNS. CORRESPONDING STOPS ON ALL MACHINES ON A CIRCUIT MUST BE THE SAME NUMBER OF SLOTS FROM LEFT MARGIN.

(2) RIGHT MARGIN TABULATOR STOP (WITH WIDE SHELF)

NOTE: BEFORE MAKING THIS ADJUSTMENT, CHECK RIGHT MARGIN AND TABULATOR PAWL ADJUSTMENTS.

POSITION PRINTING CARRIAGE AT RIGHT MARGIN (SPACING CUTOUT OPERATED). INSERT STOP WITH WIDE SHELF IN SLOT IMMEDIATELY TO LEFT OF PAWL. SHELF SHOULD EXTEND TO RIGHT SO THAT PAWL RESTS ON IT.

FIGURE 2-24. TYPING UNIT, HORIZONTAL TABULATOR MECHANISM FRONT VIEW

6. HORIZONTAL TABULATOR MECHANISM

NOTE

THE FOLLOWING TWO HORIZONTAL TABULATOR MECHANISM ADJUSTMENTS SHOULD BE CHECKED BEFORE MAKING THE TRANSMITTER CONTROL ADJUSTMENTS SHOWN BELOW.

1. OPERATING LEVER SLIDE ARM (FIGURE 2-17)
2. OPERATING LEVER ADJUSTING PLATE (FIGURE 2-17)

IF EITHER OF THE ABOVE ADJUSTMENTS ARE CHANGED, THE TRANSMITTER CONTROL ADJUSTMENTS SHOULD BE RECHECKED.

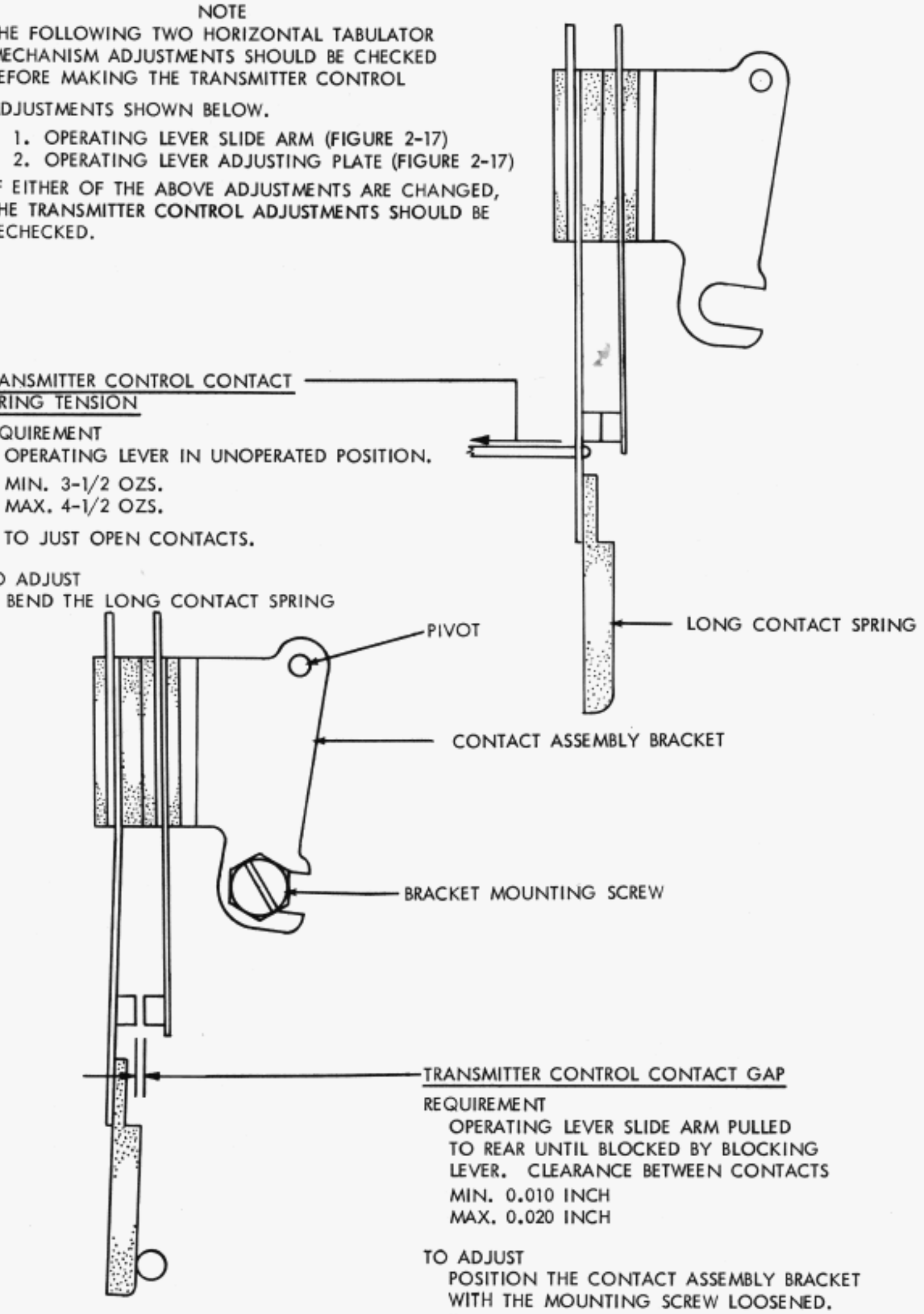

FIGURE 2-25 TYPING UNIT, HORIZONTAL TABULATOR MECHANISM

7. PAGE FEED-OUT MECHANISM

(A) PAGE FEED-OUT GEAR PLAY
REQUIREMENT
BARELY PERCEPTIBLE BACKLASH.
TO ADJUST
POSITION GEAR PIVOT POST WITH NUT LOOSENED.

(D) INDEXING DISK
REQUIREMENT
CLEARANCE BETWEEN HIGHEST NUMBERED INDEX PLATE AND BAIL
MIN. 0.020 INCH
MAX. 0.040 INCH
TO CHECK
LINE FEED CLUTCH DISENGAGED. INDEX PLATE ADJACENT TO BAIL. TAKE UP PLAY BETWEEN GEARS TO MAKE CLEARANCE MINIMUM.
TO ADJUST
DISENGAGE GEAR FROM IDLER. TURN HANDWHEEL CLOCKWISE UNTIL INDEX PLATE JUST OPERATES BAIL. ENGAGE FIRST TOOTH ON IDLER. POSITION INDEXING DISK WITH THREE MOUNTING SCREWS LOOSENED
NOTE: IF PAGE FEED OUT GEAR HAS UNEVEN NUMBER OF TEETH, ROTATE PLATEN UNTIL HEAD OF SCREW IN PLATEN SPUR GEAR IS UP AND PLATEN IS DETENTED, THEN PROCEED WITH ADJUSTMENT.

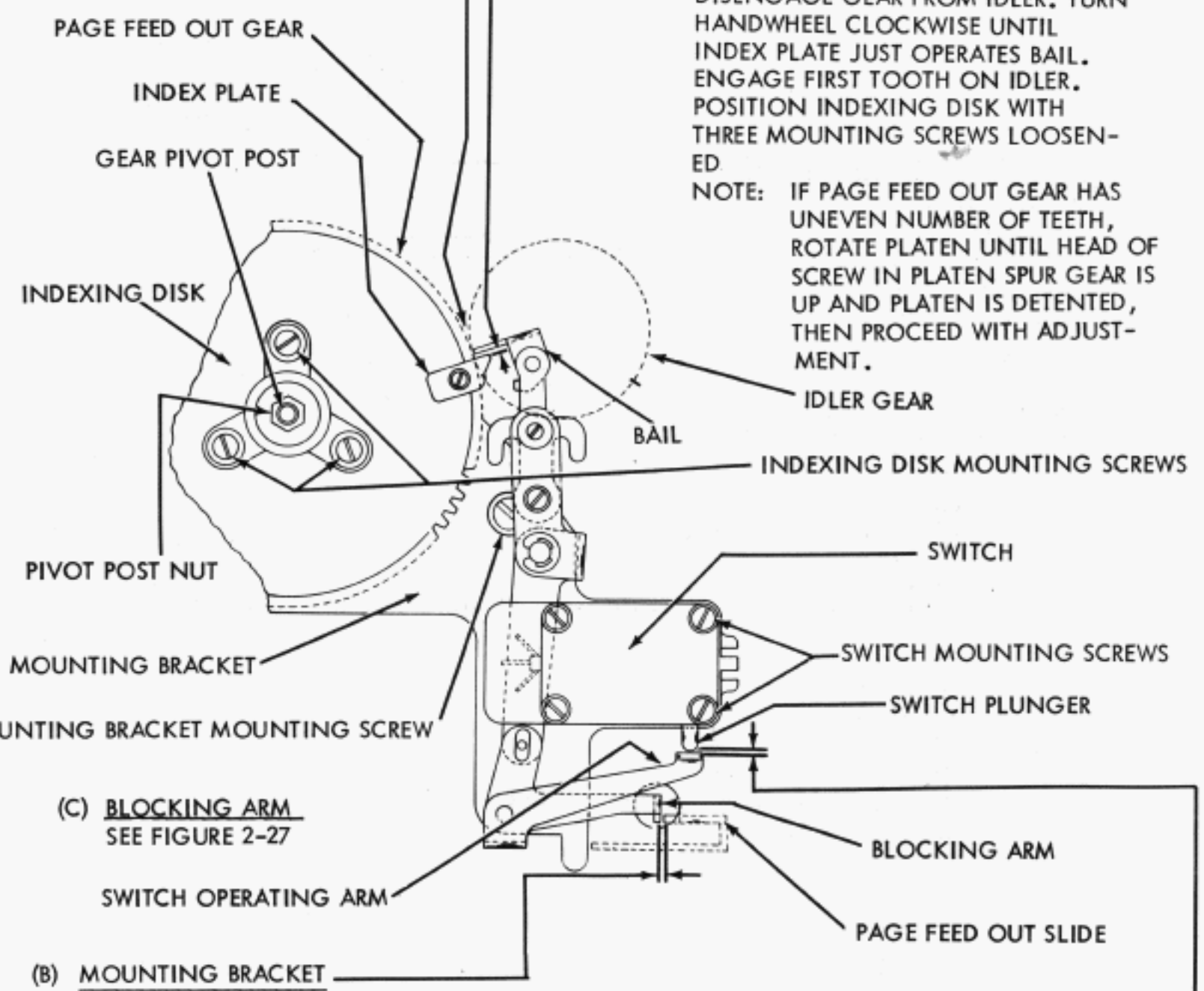

(C) BLOCKING ARM
SEE FIGURE 2-27

(B) MOUNTING BRACKET
REQUIREMENT
CLEARANCE BETWEEN BLOCKING ARM AND PAGE FEED-OUT SLIDE.
MIN. 0.002 INCH
MAX. 0.015 INCH
TO CHECK
SELECT FEED-OUT SEQUENCE CODE BAR CLUTCH DISENGAGED. TAKE UP PLAY IN BLOCKING ARM AND FEED OUT SLIDE TO MAKE CLEARANCE MINIMUM.
TO ADJUST
POSITION LOWER PORTION OF MOUNTING BRACKET WITH MOUNTING SCREWS LOOSENED.

(E) SWITCH OPERATING ARM (USED ONLY WITH TRANSMITTER CONTROL)
REQUIREMENT
BLOCKING ARM IN POSITION TO BLOCK SLIDE. CLEARANCE
MIN. SOME
MAX. 0.005 INCH
TO ADJUST
POSITION SWITCH WITH TWO MOUNTING SCREWS LOOSENED.

FIGURE 2-26. TYPING UNIT, PAGE FEED-OUT MECHANISM

7. PAGE FEED-OUT MECHANISM

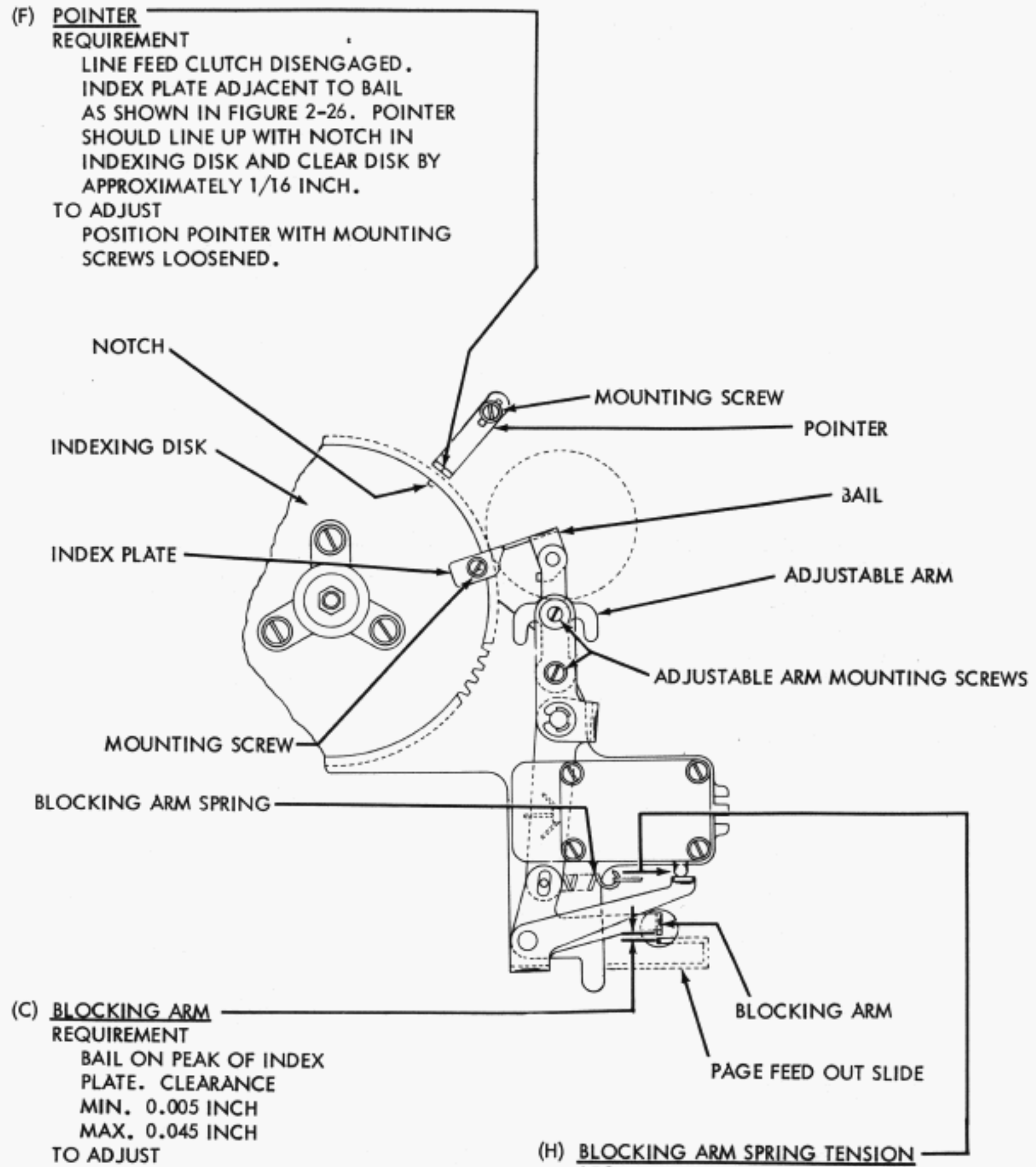

FIGURE 2-27. TYPING UNIT, PAGE FEED-OUT MECHANISM

8. SELECTIVE CALLING MECHANISM

TYPE BOX CLUTCH TRIP LEVER
(SELECTIVE - CALLING UNITS WITH OR WITHOUT OFF-LINE SHIFT SOLENOID)
CLEARANCE BETWEEN TYPE BOX CLUTCH TRIP LEVER AND CLUTCH DISK STOP LUG SHOULD BE MIN. 0.040 INCH --- MAX. 0.055 INCH
SEE FIG. 1-33

PRINT SUPPRESSOR CODE BAR SPRING
REQUIREMENT
SUPPRESSOR CODE BAR TO LEFT. MIN. 4-1/2 OZS. --- MAX. 7-1/2 OZS. TO START CODE BAR MOVING. CODE BAR SHOULD BE FREE OF BINDS.

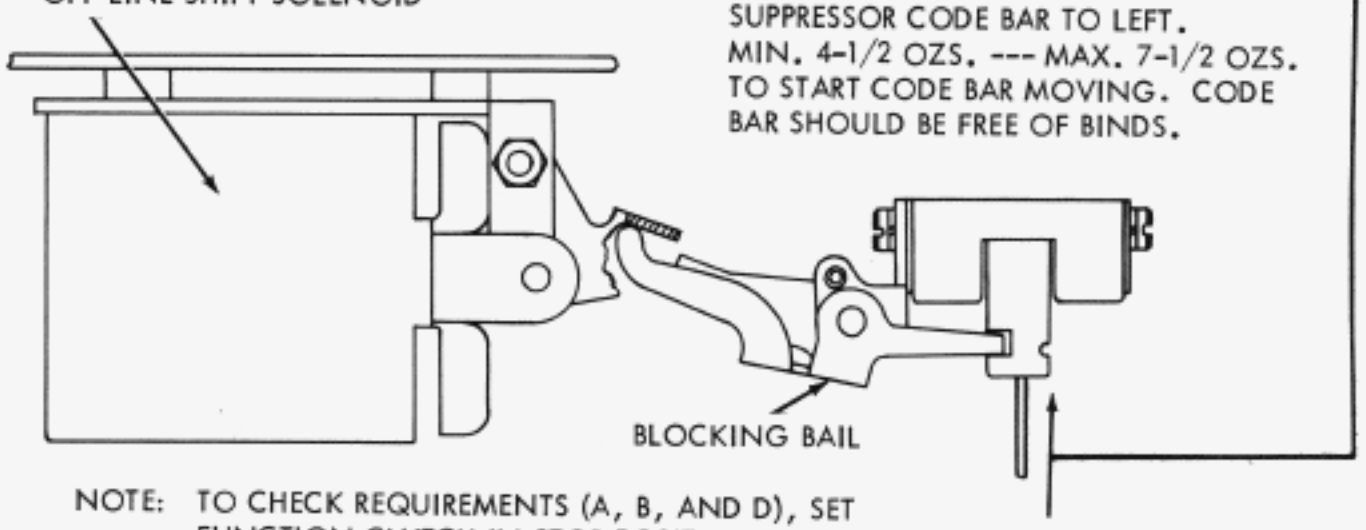

NOTE: TO CHECK REQUIREMENTS (A, B, AND D), SET FUNCTION CLUTCH IN STOP POSITION AND ALL CODE BARS TO THE RIGHT.

(A) CODE BAR SHIFT MECHANISM
REQUIREMENTS
1. WITH FUNCTION CLUTCH IN STOP POSITION, LATCH FUNCTION LEVER (SHIFT MECH.) ON ITS LOWER RELEASING LATCH. NOTCH IN SUPP. CODE BAR SHOULD ALIGN WITH NOTCHES IN OTHER CODE BARS WHEN ALL CODE BARS ARE SHIFTED TO THE RIGHT.

TO ADJUST
POSITION UPPER OR LOWER GUIDE PLATE (FIG. 1-43) WITH ITS CLAMP NUTS LOOSENED.

2. REPEAT FOR EACH STUNT CASE CODE BAR SHIFT MECHANISM.

NOTE --- POSITION THE ASSOCIATED GUIDE PLATE SO THAT THE MOVEMENT OF THE FORK IS NOT RESTRICTED WITHIN THE RANGE OF ADJUSTMENT.

(D) OFF LINE SHIFT SOLENOID BRACKET ASSEMBLY (OFF LINE ONLY)
REQUIREMENT
NOTCH IN SUPPRESSION CODE BAR SHOULD ALIGN WITH NOTCHES IN OTHER CODE BARS WHEN ALL CODE BARS ARE SHIFTED TO THE RIGHT.

TO ADJUST
POSITION THE SOLENOID BRACKET ASSEMBLY WITH ITS MOUNTING SCREWS LOOSENED.

(C) TYPE BOX CLUTCH SUPPRESSION ARM
SEE PAGE 2-29

(B) CONDITION CODE (ZERO) CODE BAR SHIFT MECHANISM
REQUIREMENT
WITH FUNCTION CLUTCH IN STOP POSITION, LATCH FUNCTION LEVER (SHIFT MECH.). THE NOTCH IN CONDITION CODE (ZERO) CODE BAR SHOULD ALIGN WITH NOTCHES IN OTHER CODE BARS WHEN ALL CODE BARS ARE SHIFTED TO THE RIGHT.

TO ADJUST
POSITION THE UPPER OR LOWER GUIDE PLATE (FIG. 1-43) WITH ITS CLAMP NUTS LOOSENED.

NOTE --- POSITION THE ASSOCIATED GUIDE PLATE SO THAT THE MOVEMENT OF THE FORK IS NOT RESTRICTED.

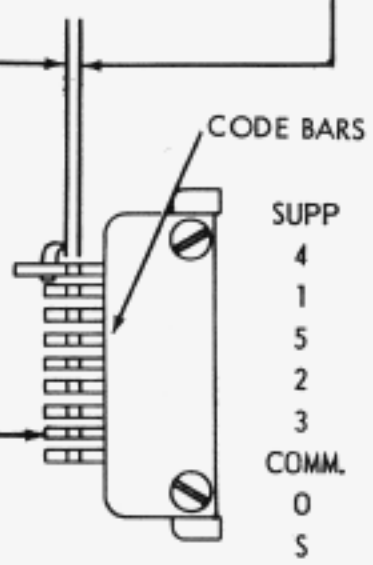

FIGURE 2-28. TYPING UNIT, CODE BAR SHIFT MECHANISM

8. SELECTIVE CALLING MECHANISM

(C) TYPE BOX CLUTCH SUPPRESSION ARM (WITH OR WITHOUT SOLENOID SHIFT)

REQUIREMENT

SUPPRESSION ARM IN BLOCKING POSITION. SHAFT ROTATED UNTIL THE FUNCTION CLUTCH SHOE LEVER IS OPPOSITE THE FUNCTION CLUTCH TRIP LEVER.

1. AT LEAST 0.003 INCH CLEARANCE BETWEEN TRIP ARM EXTENSION AND CLUTCH TRIP LEVER.
2. AT LEAST 0.006 INCH CLEARANCE BETWEEN THE FUNCTION CLUTCH SHOE LEVER AND FUNCTION CLUTCH TRIP LEVER.

TO ADJUST

POSITION SUPPRESSION ARM WITH ITS MOUNTING SCREWS LOOSENED.

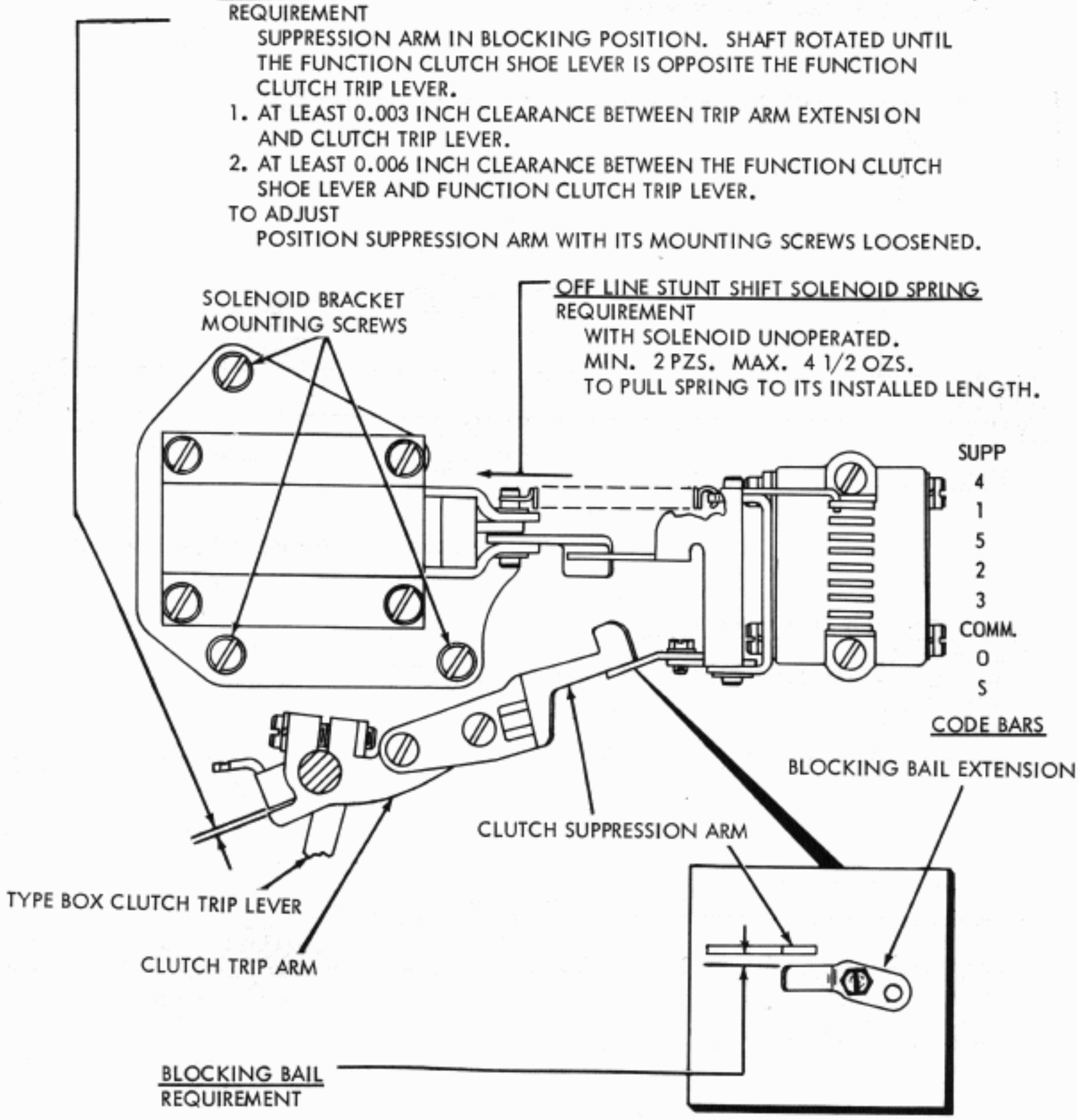

1. LATCH FUNCTION LEVER OF ANY STUNT CASE CODE BAR SHIFT MECHANISM AND ROTATE MAIN SHAFT UNTIL LOWER SURFACE OF THE SUPPRESSION ARM IS ALIGNED(APPROX.)WITH BOTTOM SURFACE OF BLOCKING BAIL EXTENSION. CLEARANCE BETWEEN SUPPRESSION ARM AND BLOCKING BAIL EXTENSION, WITH PLAY TAKEN UP TO PRODUCE MINIMUM CLEARANCE.

   MIN. 0.008 INCH ——————————— MAX. 0.055 INCH

TO ADJUST

POSITION EXTENSION WITH ITS MOUNTING SCREW LOOSENED. REFINE THE ADJUSTMENT IF NECESSARY, AND RECHECK EACH SHIFT MECHANISM.

2. REFINE THE STUNT CASE CODE BAR SHIFT MECHANISM ADJUSTMENT OF ANY SHIFT MECHANISM THAT DOES NOT MEET THE ABOVE REQUIREMENT.

FIGURE 2-29. TYPING UNIT, OFF LINE STUNT SHIFT SOLENOID MECHANISM

8. SELECTIVE CALLING MECHANISM

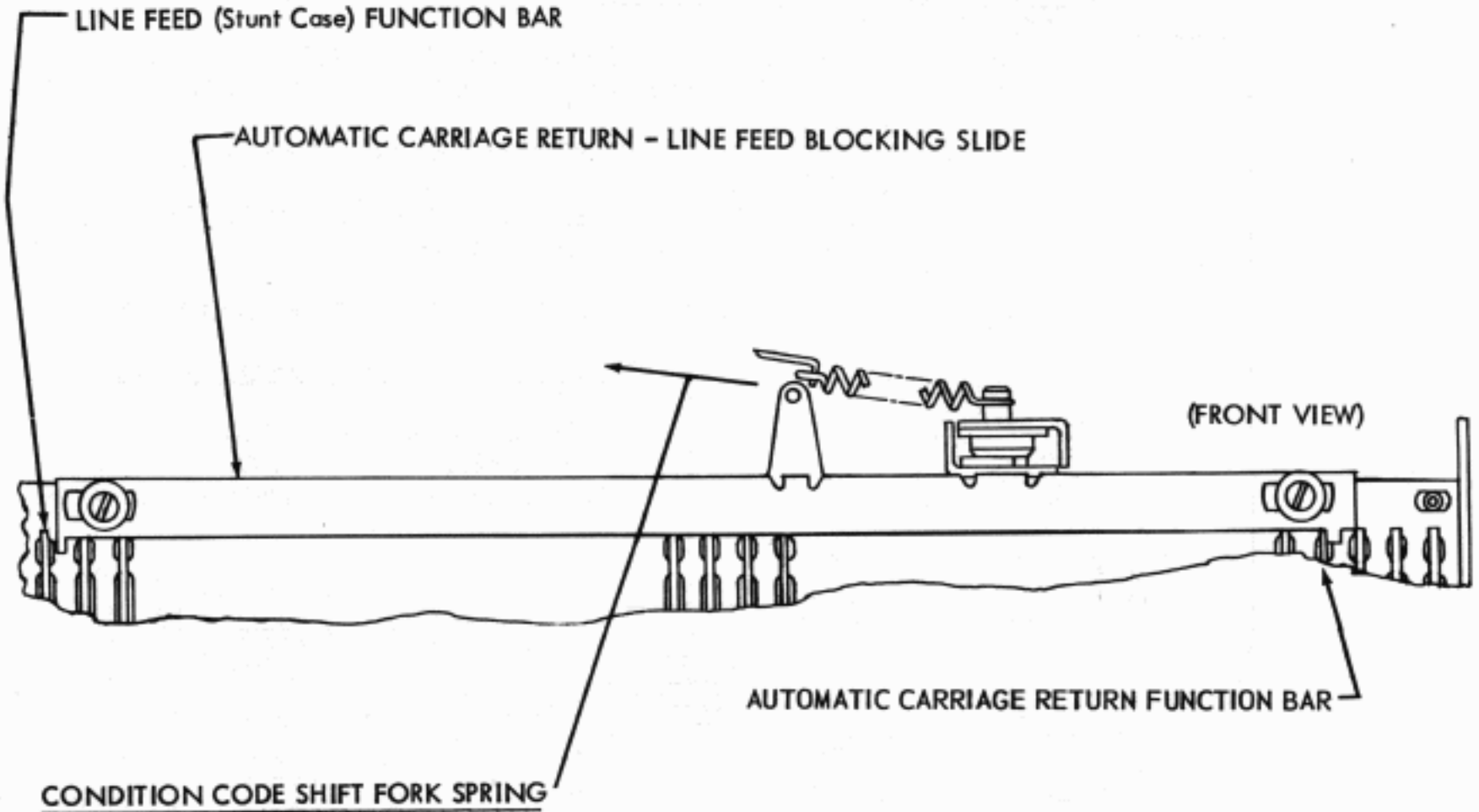

CONDITION CODE SHIFT FORK SPRING

REQUIREMENT

WITH CONDITION CODE SHIFT IN ITS UNOPERATED POSITION.
MIN. 1 OZ.
MAX. 3 OZS.
TO PULL SPRING TO ITS INSTALLED POSITION.

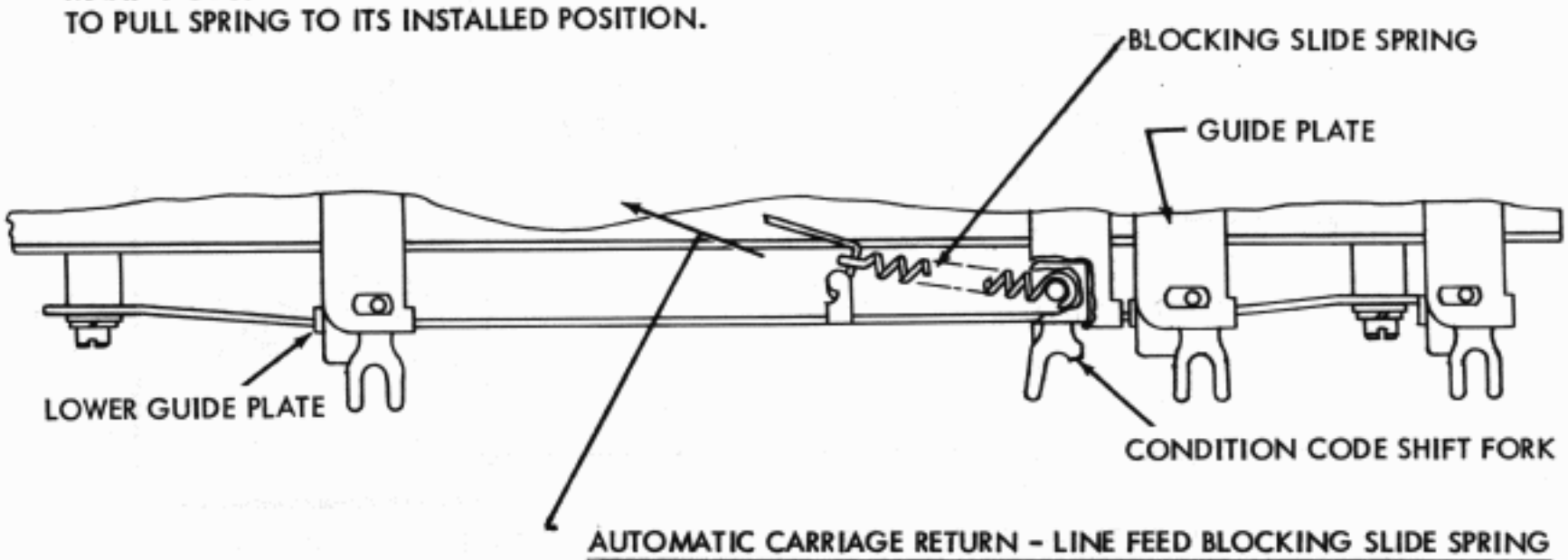

(TOP VIEW)

AUTOMATIC CARRIAGE RETURN - LINE FEED BLOCKING SLIDE SPRING

REQUIREMENT

WITH CONDITION CODE SHIFT FORK IN ITS UNOPERATED POSITION.
MIN. 1 OZ.
MAX. 3 OZS.
TO PULL SPRING TO ITS INSTALLED LENGTH.

FIGURE 2-30 TYPING UNIT, STUNT BOX MECHANISM

9. LOCAL BACK SPACE MECHANISM

NOTE: FOR EARLIER DESIGN SEE FIGURE 4-46.

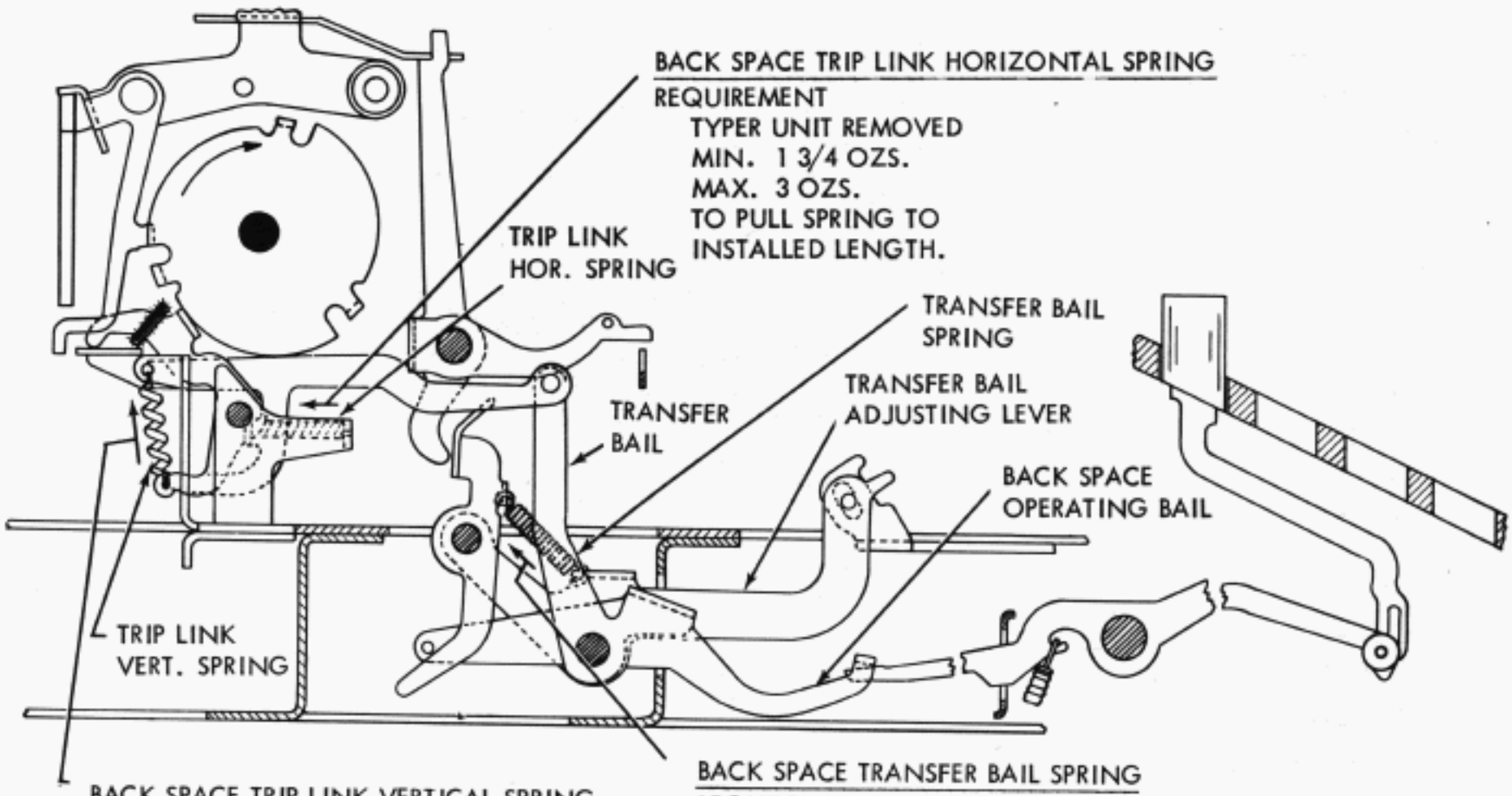

FIGURE 2-31. KEYBOARD, BACK SPACE MECHANISM

9. LOCAL BACK SPACE MECHANISM

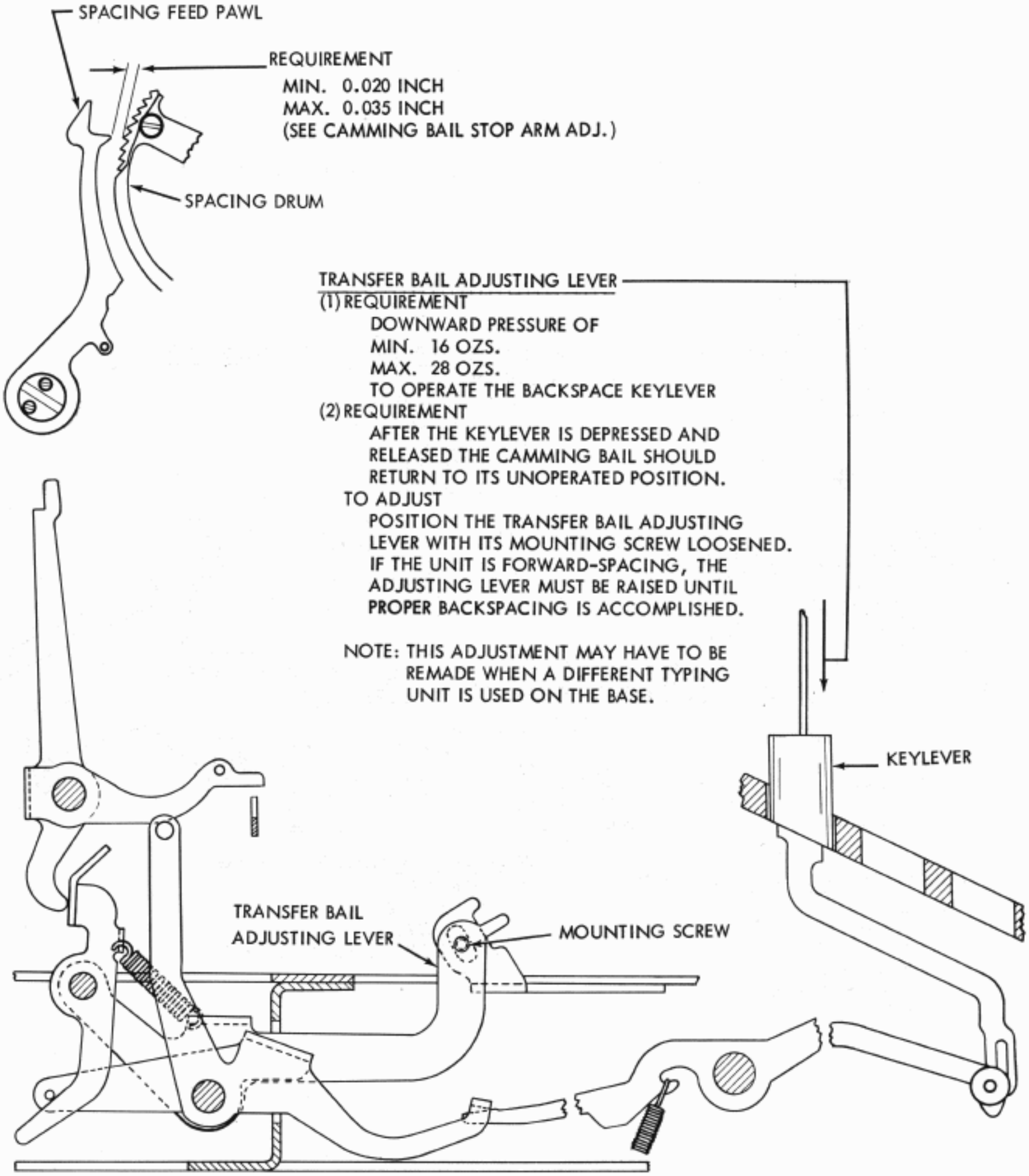

NOTE: FOR EARLIER DESIGN SEE FIGURE 4-47.

FIGURE 2-32. KEYBOARD, BACK SPACE MECHANISM

9. LOCAL BACK SPACE MECHANISM

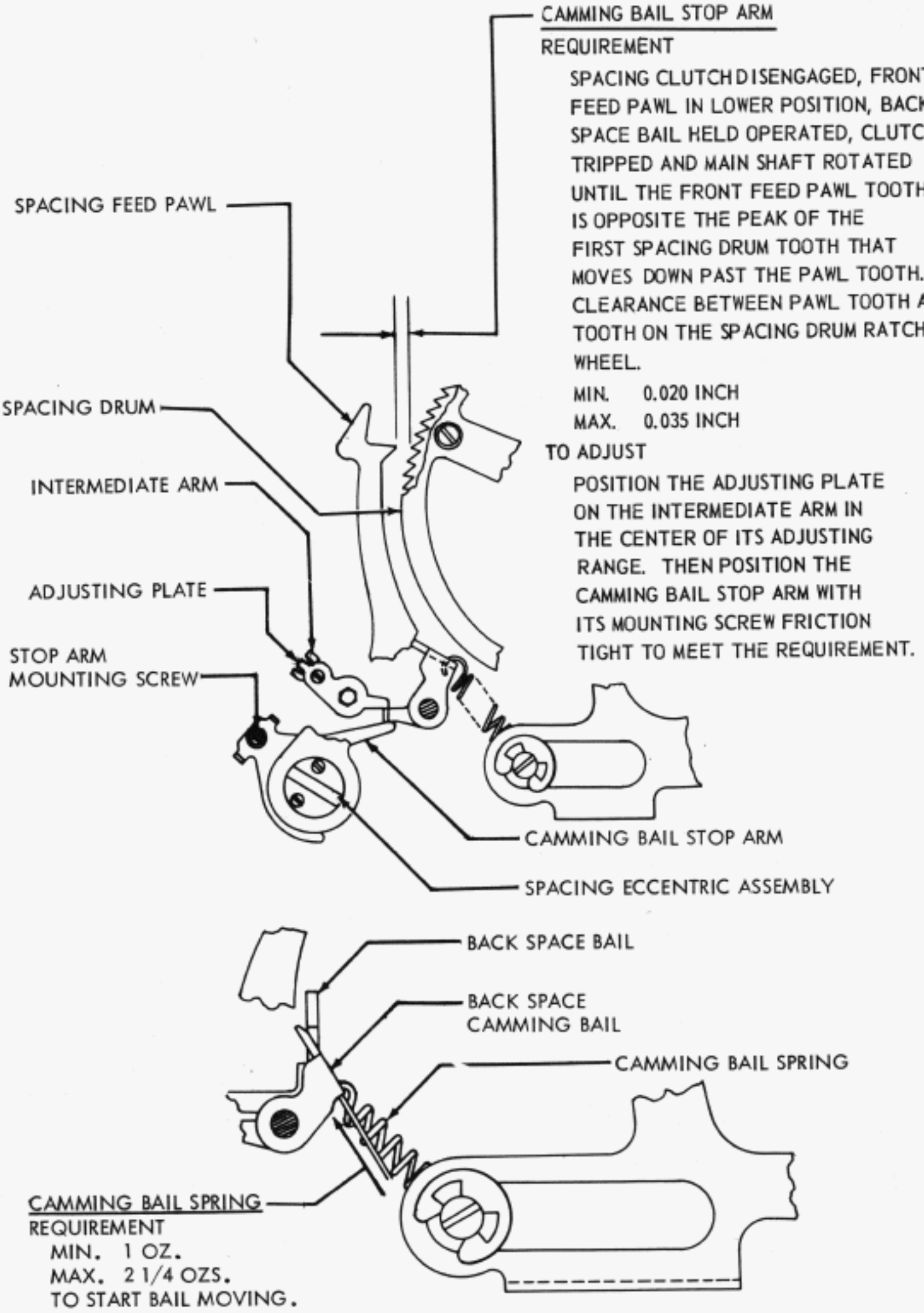

FIGURE 2-33. TYPING UNIT, BACK SPACE MECHANISM

10. REVERSE LINE FEED MECHANISM

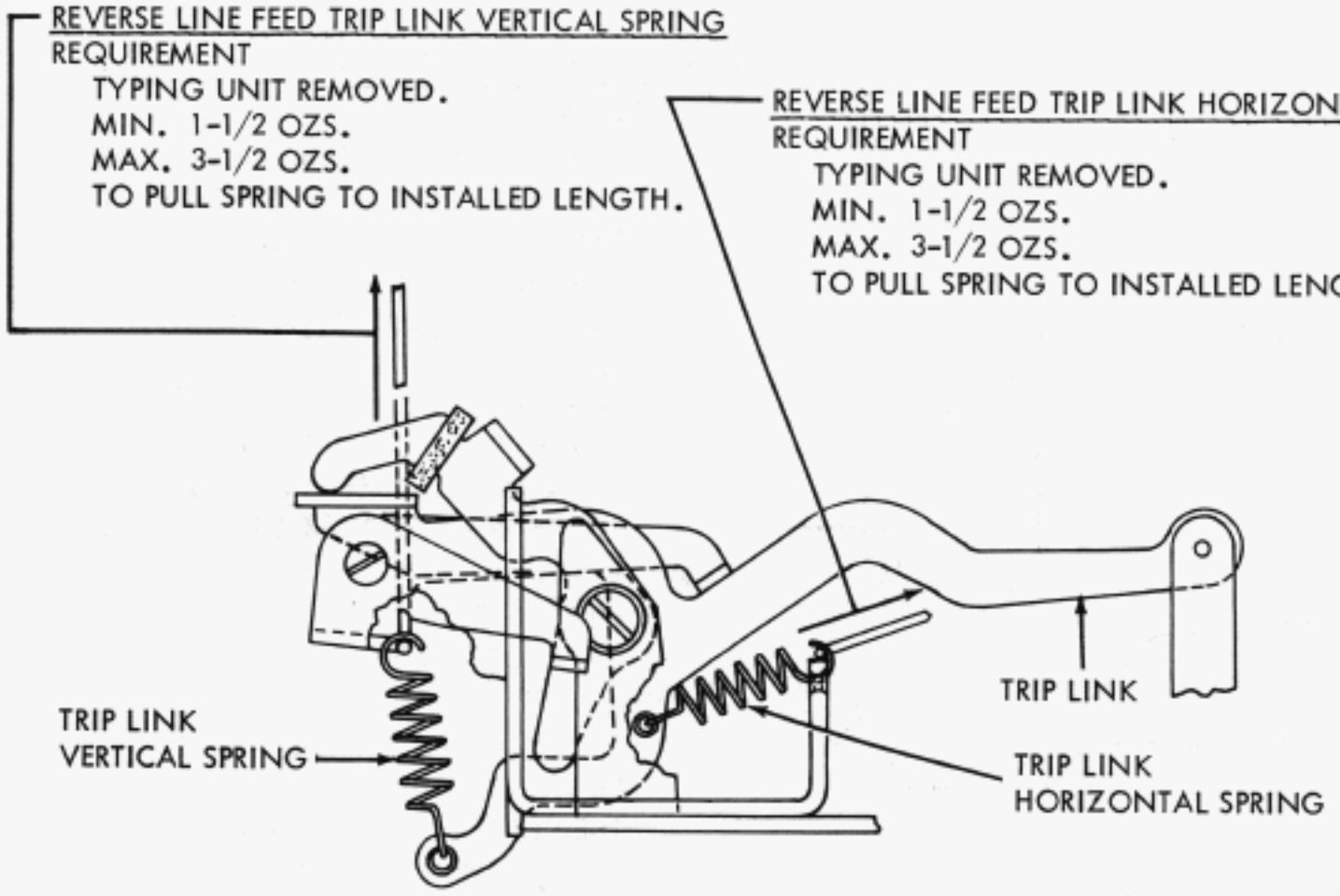

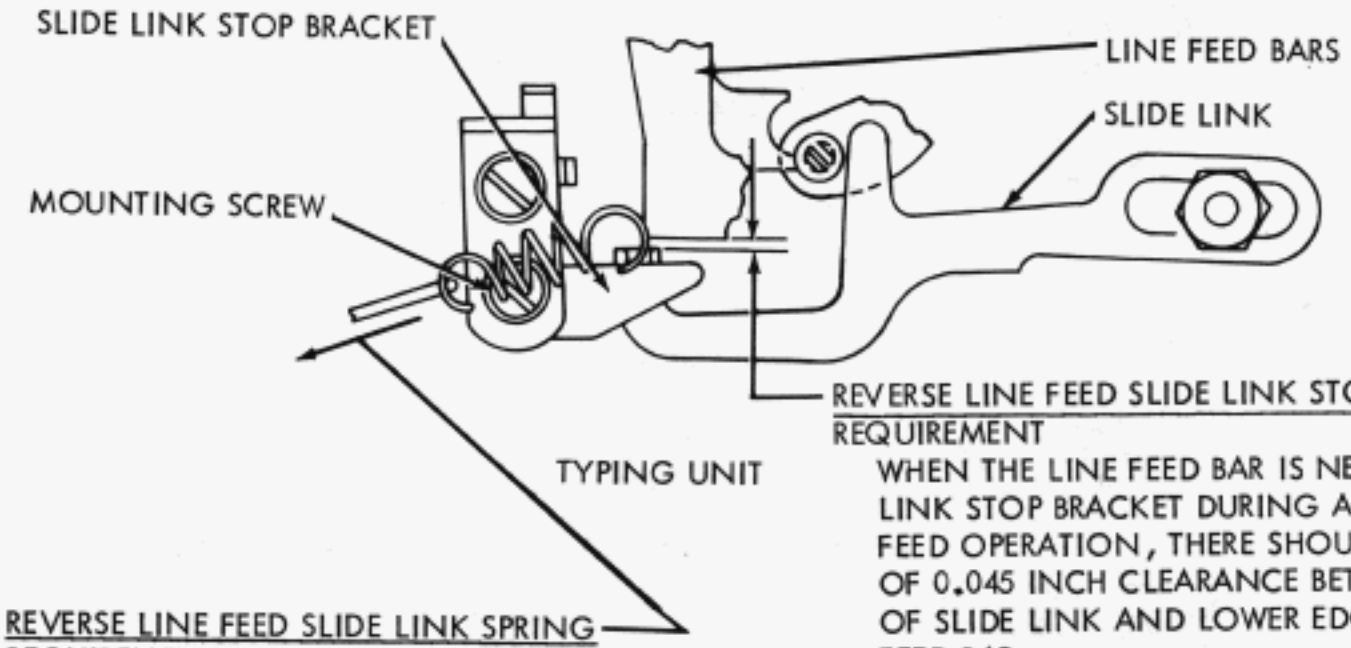

FIGURE 2-34. LOCAL REVERSE LINE FEED MECHANISM, LEFT VIEW

10. REVERSE LINE FEED MECHANISM

LINE FEED CLUTCH SPUR GEAR

REQUIREMENT

LINE FEED CLUTCH DISENGAGED. SLIDE LINK RAISED UPWARD SO AS TO FULLY ENGAGE THE END OF THE LOWER LINE FEED BAR, SLIDE HELD FORWARD BY ITS SPRING CLEARANCE BETWEEN SLIDE LINK AND LOWER LINE FEED BAR.

MIN. 0.005 INCH
MAX. 0.040 INCH

TO ADJUST

SET LINE FEED CLUTCH SPUR GEAR AT CENTER OF ADJUSTING RANGE DISENGAGE LINE FEED CLUTCH, LOOSEN ECCENTRIC ASSEMBLY BEARING POST. MESH THE TWO GEARS SO THAT THE FORWARD EDGES OF THE LOWER ENDS OF THE LINE FEED BARS ARE IN LINE WITH EACH OTHER WITHIN 0.040 INCH. ROTATE THE LINE FEED CLUTCH SPUR GEAR RELATIVE TO ITS MOUNTING PLATE WITH THE GEAR MOUNTING SCREWS LOOSENED. CHECK BOTH BARS FOR THE REQUIRED CLEARANCE AT EACH STOP POSITION OF THE CLUTCH

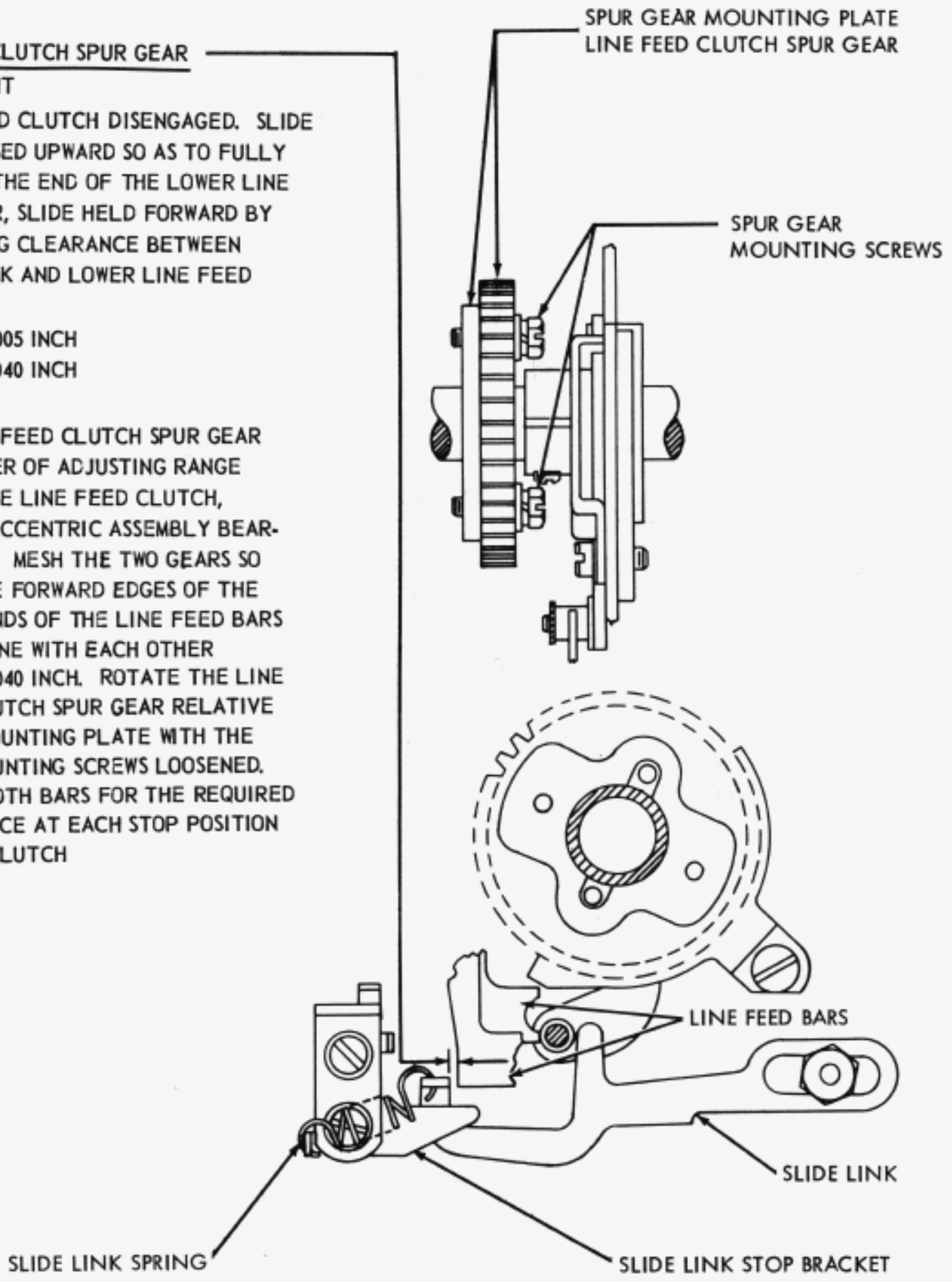

FIGURE 2-35. TYPING UNIT, LINE FEED MECHANISM, LEFT SIDE VIEW

10. REVERSE LINE FEED MECHANISM

(B)
PLATEN DETENT BAIL SPRING TENSION
REQUIREMENT
DETENT SEATED BETWEEN TWO TEETH ON LINE FEED SPUR GEAR.
MIN. 16 OZS.
MAX. 32 OZS.
TO START DETENT BAIL MOVING.

(C)
LINE FEED BAR RELEASE LEVER SPRING TENSION
REQUIREMENT
MIN. 3 OZS.
MAX. 8 OZS.
TO START LEVER MOVING.

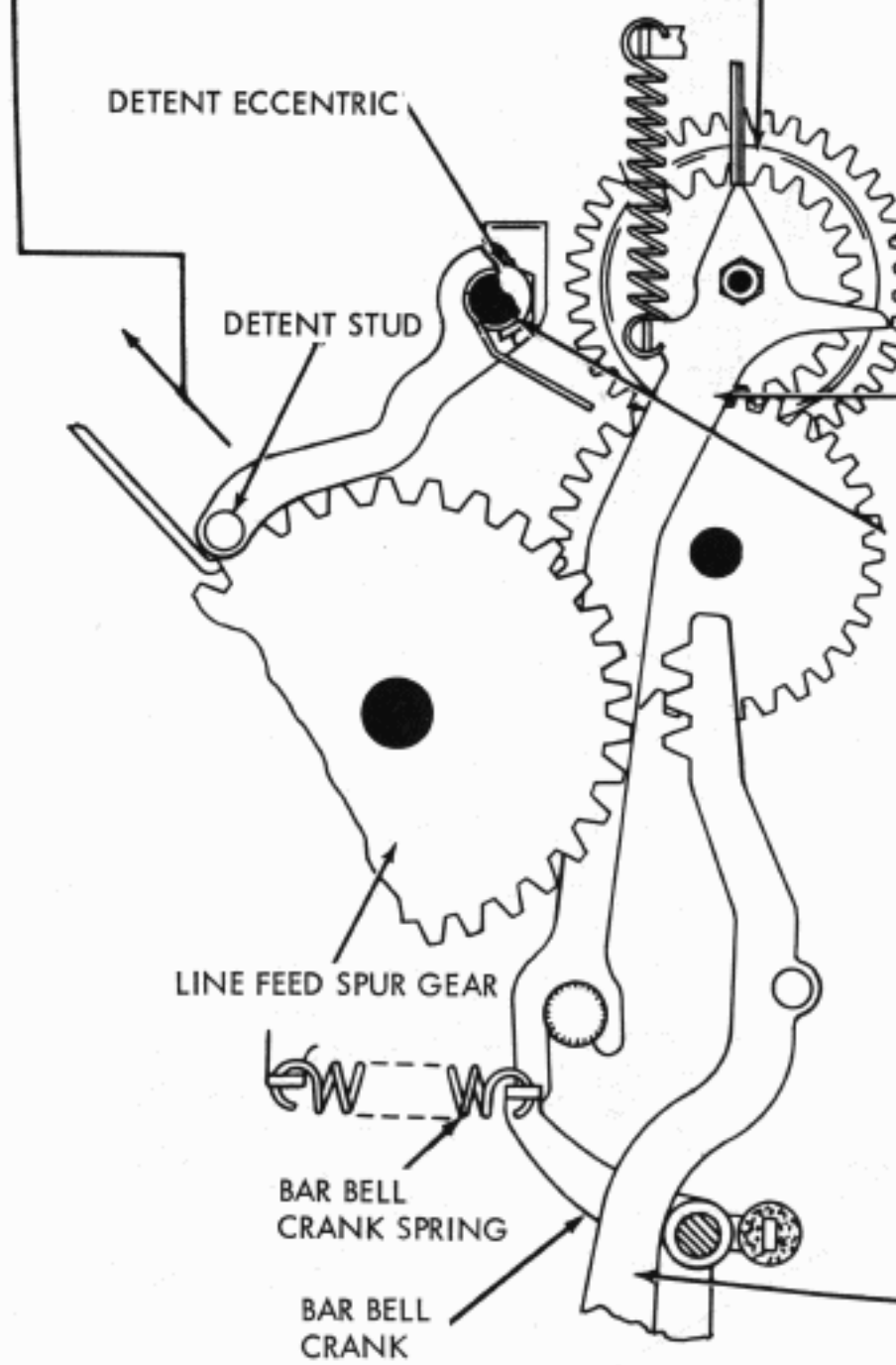

(A)
LINE FEED SPUR GEAR DETENT ECCENTRIC
REQUIREMENT
LINE FEED CLUTCH DISENGAGED. PLATEN ROTATED UNTIL DETENT STUD IS SEATED BETWEEN TWO TEETH ON LINE FEED SPUR GEAR. WHEN HAND WHEEL IS RELEASED, MANUALLY SET THE TEETH ON THE FEED BARS INTO ENGAGEMENT WITH THE TEETH ON THE LINE FEED SPUR GEAR. THE DETENT STUD SHOULD CONTACT ONE GEAR TOOTH AND BE NOT MORE THAN 0.006 INCH FROM THE OTHER TOOTH

TO ADJUST
ROTATE THE DETENT ECCENTRIC WITH ITS MOUNTING SCREWS LOOSENED. KEEP HIGH PART OF ECCENTRIC UPWARD.

FIGURE 2-35. TYPING UNIT, LINE FEED MECHANISM, RIGHT SIDE VIEW

10. REVERSE LINE FEED MECHANISM

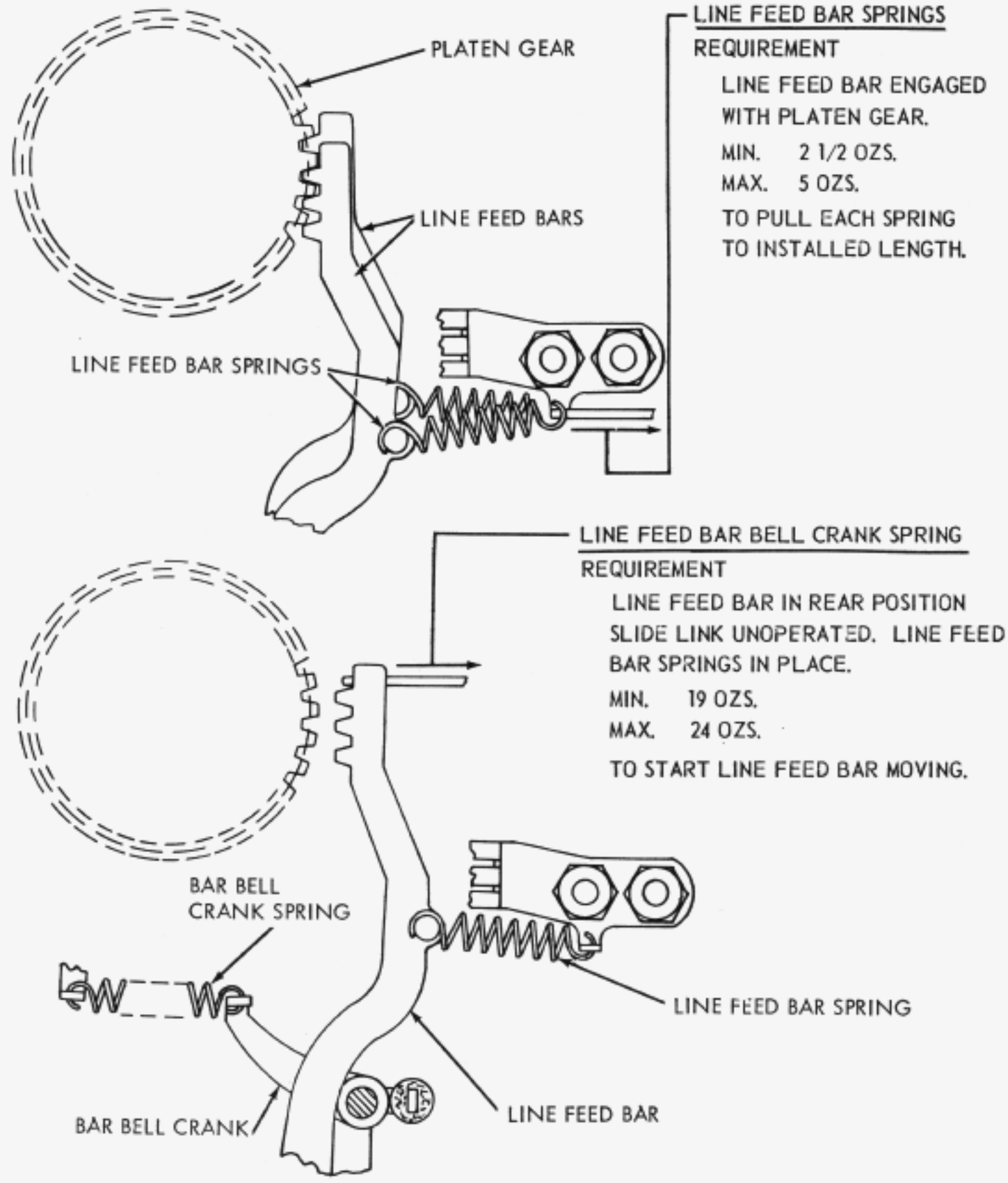

FIGURE 2-37. TYPING UNIT, LINE FEED MECHANISM, RIGHT SIDE VIEW

11. MOTOR CONTROL RELAY MECHANISM

(D)

SWITCH POSITION (IF UNIT IS SO EQUIPPED)

REQUIREMENT

WHEN THE SOLENOID PLUNGER IS DEPRESSED SLOWLY, THE SWITCH SHOULD OPERATE WHEN THE PLUNGER IS WITHIN MAX. 0.005 INCH FROM THE END OF ITS TRAVEL

TO ADJUST

LOOSEN THE SWITCH MOUNTING SCREWS. HOLD THE PLUNGER DOWNWARD AND MOVE THE SWITCH TOWARD THE PLUNGER UNTIL IT OPERATES. TIGHTEN THE SCREWS.

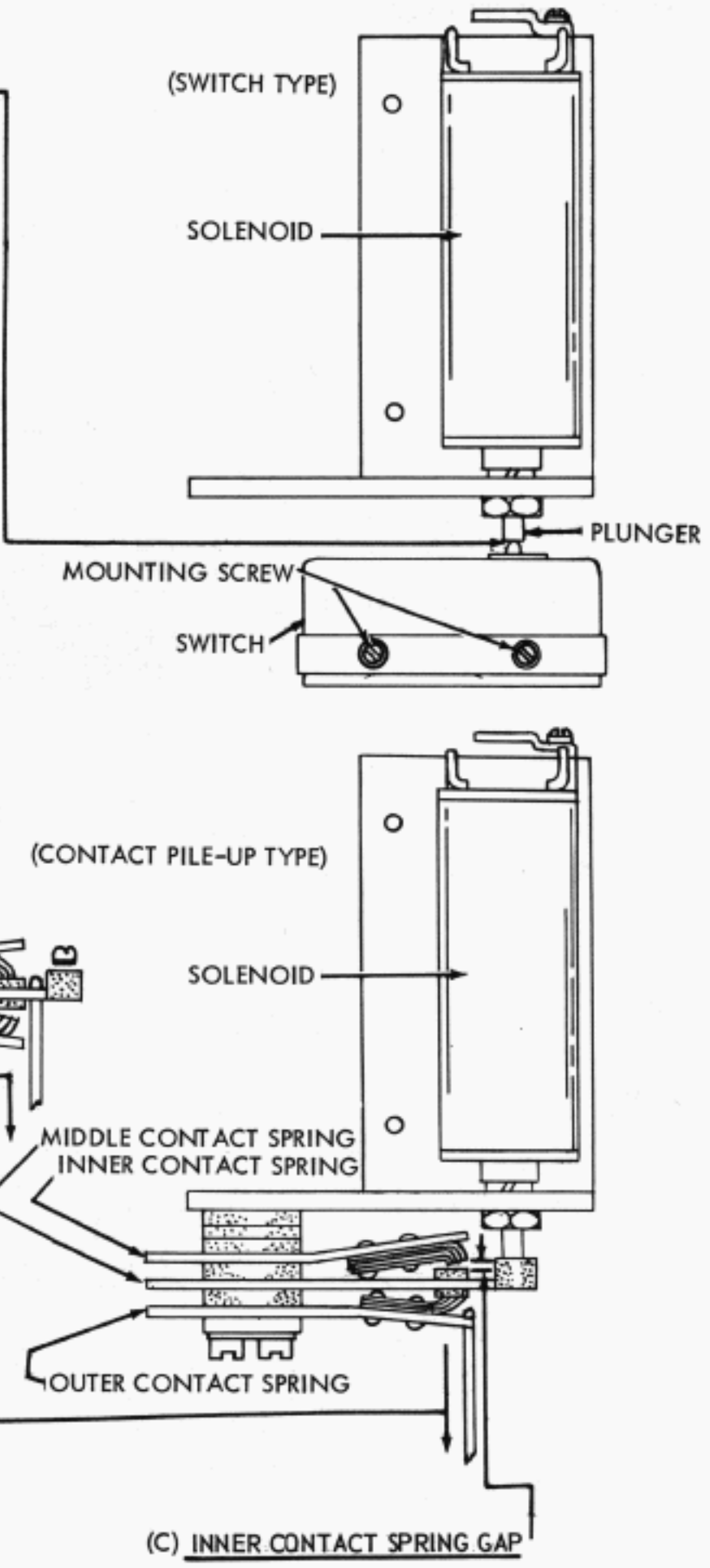

(A)

MIDDLE CONTACT SPRING TENSION

REQUIREMENT

WITH SOLENOID PLUNGER UNOPERATED
MIN. 2 OZS.
MAX. 3 OZS.
TO BREAK CONTACT WITH INNER CONTACT

TO ADJUST

BEND MIDDLE CONTACT SPRING

(B)

OUTER CONTACT SPRING TENSION

REQUIREMENT

HOLD SOLENOID PLUNGER OPERATED
MIN. 12 OZS.
MAX. 16 OZS.
TO BREAK CONTACT WITH THE MIDDLE CONTACT SPRING.

TO ADJUST

BEND OUTER CONTACT SPRING.

(C) INNER CONTACT SPRING GAP

REQUIREMENT

HOLD SOLENOID PLUNGER OPERATED
CLEARANCE BETWEEN INNER AND MIDDLE CONTACT SPRING CONTACT SURFACE
MIN. 0.025 INCH
MAX. 0.030 INCH

TO ADJUST

BEND THE INNER CONTACT SPRING.

FIGURE 2-38. ELECTRICAL SERVICE UNIT, MOTOR CONTROL RELAY

12. END-OF-FORM ALARM MECHANISM AND LOW-PAPER AND PAPER-OUT SWITCH ASSEMBLY

END-OF-FORM LEVER
REQUIREMENT
END-OF-FORM LEVER SHOULD MOVE FREELY BETWEEN TYPING UNIT AND PAPER GUIDE ON THE CABINET. CHECK WITH DOME CLOSED AND SMALL DOOR OPEN.

TO ADJUST
POSITION END-OF-FORM LEVER FORWARD OR BACKWARD WITH ITS CLAMP SCREWS LOOSENED AND UP OR DOWN WITH END-OF-FORM ASSEMBLY MOUNTING SCREWS LOOSENED.

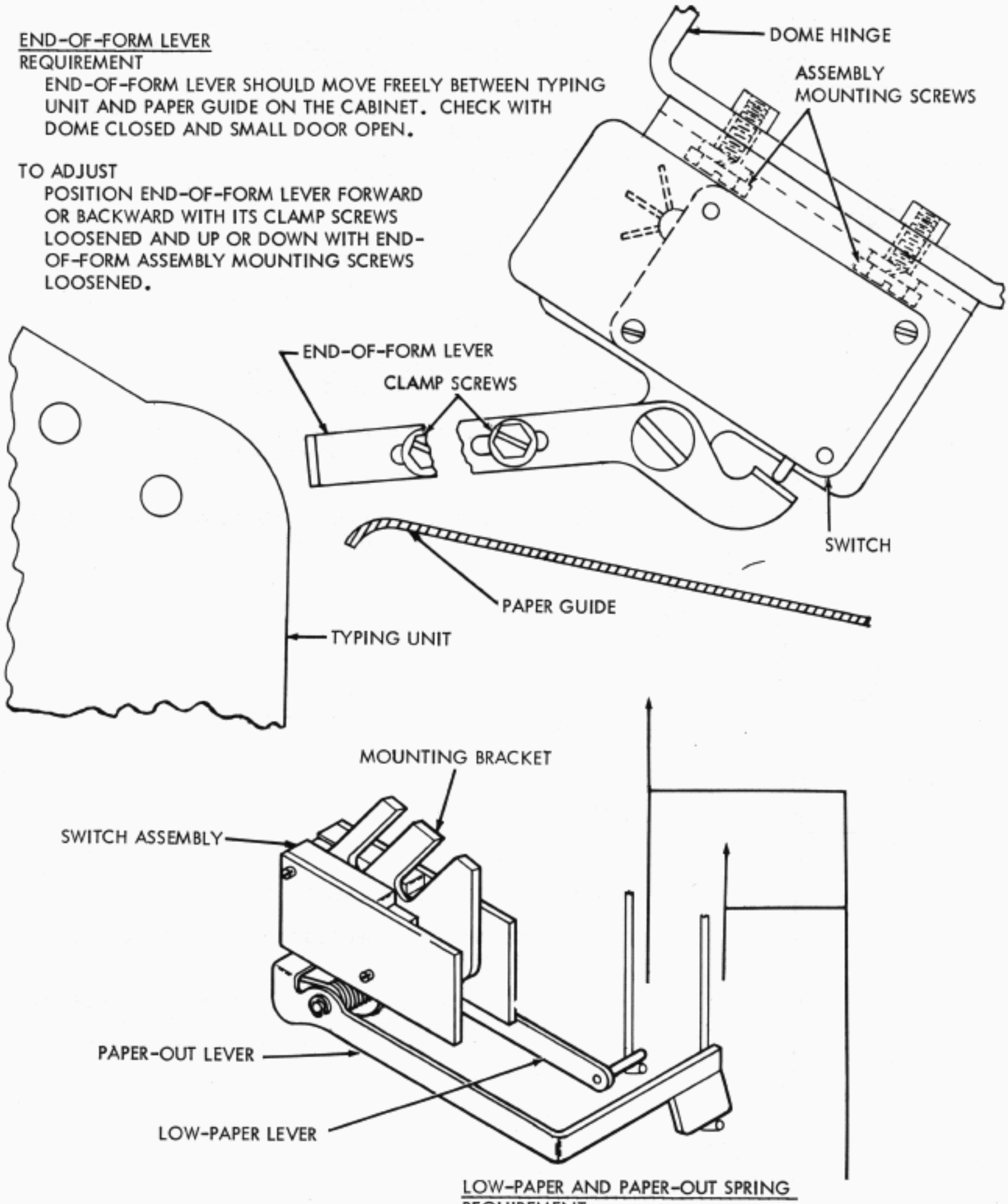

LOW-PAPER AND PAPER-OUT SPRING
REQUIREMENT
MIN. 1/4 OZ.
MAX. 1-1/2 OZS.
TO PULL THE LOW-PAPER AND PAPER-OUT LEVERS UP TO POINT WHERE SWITCHES OPERATE.

FIGURE 2-39. CABINET, END-OF-FORM ALARM MECHANISM AND LOW-PAPER AND PAPER-OUT SWITCH ASSEMBLY

13. OFF-SET COPYHOLDER

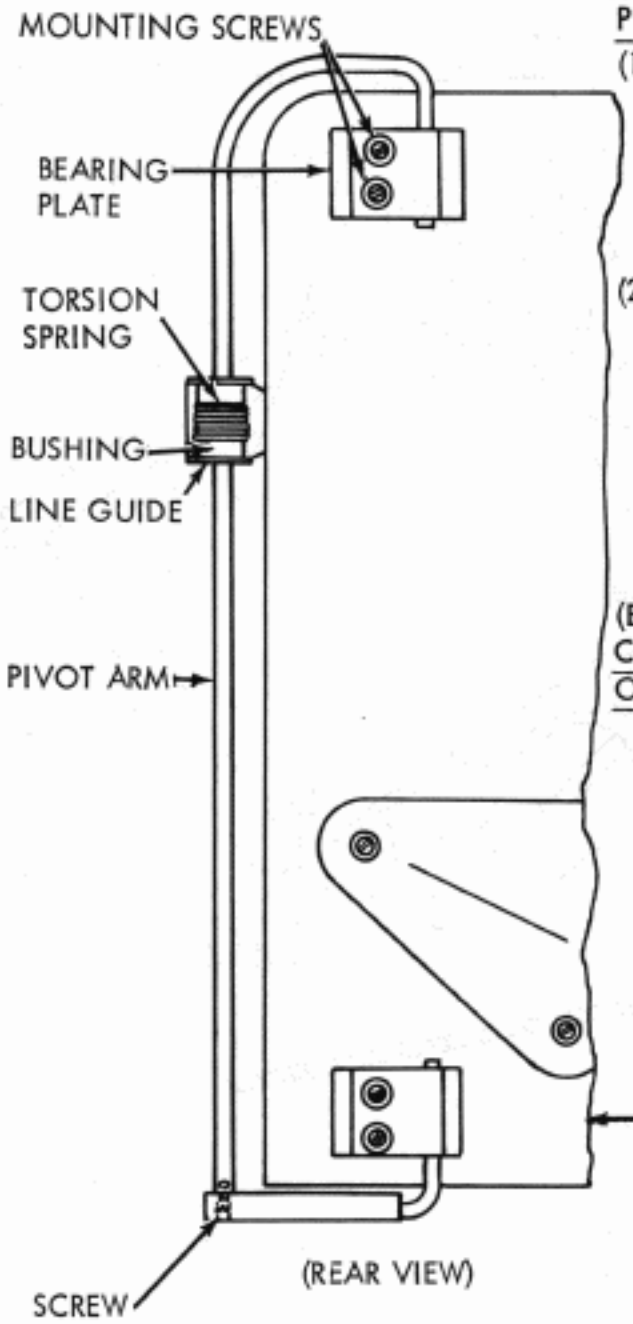

(A)
PIVOT ARM AND LINE GUIDE

(1) REQUIREMENT
THERE SHOULD BE SUFFICIENT TENSION ON THE PIVOT ARM TO HOLD IT IN THE DESIRED POSITION.
TO ADJUST
TIGHTEN THE BEARING PLATE MOUNTING SCREWS. (REMOVE SHIMS, IF PRESENT)

(2) REQUIREMENT
THERE SHOULD BE SUFFICIENT TENSION ON THE LINE GUIDE TO PREVENT IT FROM SLIPPING DOWN ITS PIVOT ARM.
TO ADJUST
REMOVE THE LOWER BEARING PLATE. REMOVE THE SCREW FROM THE BOTTOM OF THE PIVOT ARM. SLIP THE LINE GUIDE OFF THE PIVOT ARM. ROTATE THE BUSHING IN THE LINE GUIDE TO INCREASE THE TENSION OF THE TORSION SPRING. REASSEMBLE

(B)
COPY HOLDER BRACKET AND TOP BRACKET ALIGNMENT ON TABLE MOUNTED CABINET (NOT ILLUSTRATED)

REQUIREMENT
WITH LOWER BRACKET IN FORWARD POSITION, THE HOLE IN THE TOP BRACKET SHOULD ALIGN WITH THE TOP HOLE IN COPYHOLDER BRACKET.
TO ADJUST
POSITION LOWER BRACKET ALONG ITS ELONGATED MOUNTING HOLES BY MEANS OF ITS TWO NUTS.

FIGURE 2-40. CABINET, OFF SET COPYHOLDER

14. DIRECTORY HOLDER (TWX)

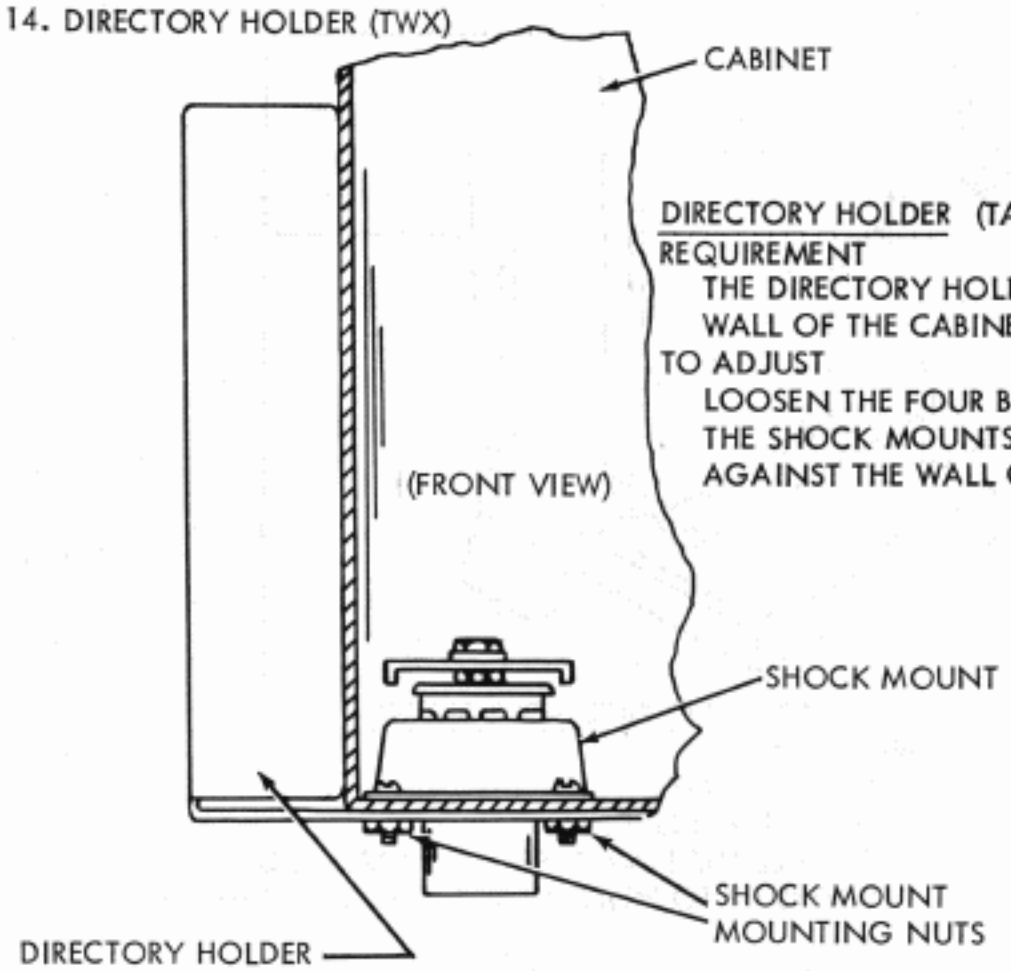

DIRECTORY HOLDER (TABLE CABINET)

REQUIREMENT
THE DIRECTORY HOLDER SHOULD FIT SNUGLY AGAINST THE WALL OF THE CABINET.
TO ADJUST
LOOSEN THE FOUR BOTTOM INNER SET OF NUTS WHICH SECURE THE SHOCK MOUNTS AND THE HOLDER. PUSH THE HOLDER AGAINST THE WALL OF THE CABINET AND TIGHTEN THE NUTS.

FIGURE 2-41. CABINET, DIRECTORY HOLDER

15. PRINT SUPPRESSION DURING SELECTION

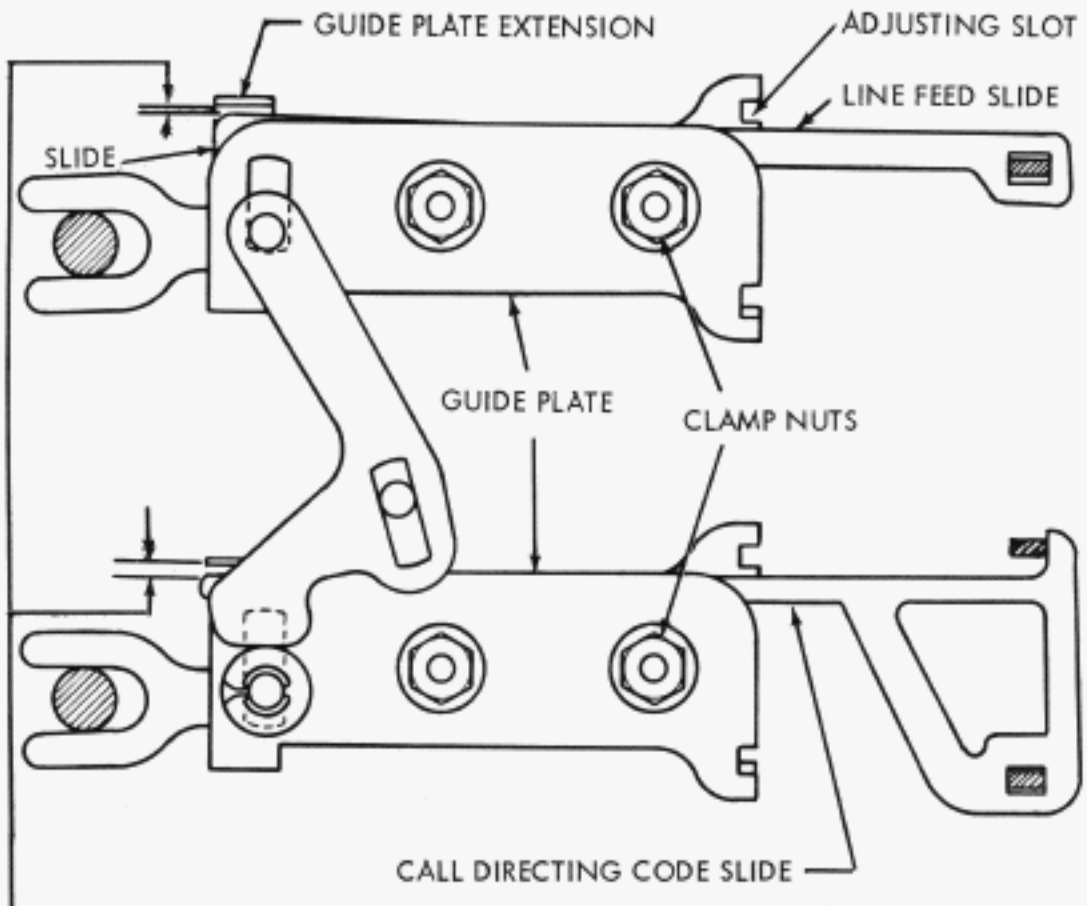

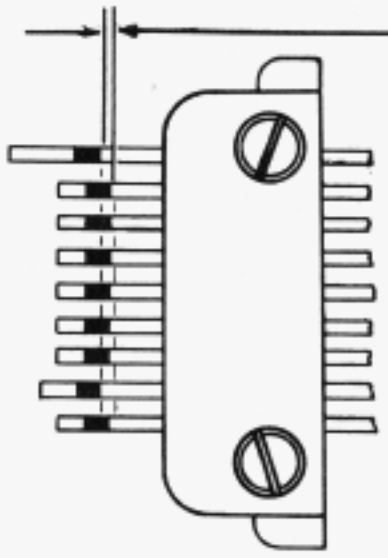

ZERO CODE BAR SHIFT MECHANISM

(1) REQUIREMENT
FUNCTION CLUTCH ROTATED UNTIL FUNCTION BARS ARE IN EXTREME REAR POSITION. LINE FEED FUNCTION PAWL HOOKED OVER ITS FUNCTION BAR AND THEN STRIPPED. THE NOTCH IN THE ZERO CODE BAR SHOULD LINE UP VERTICALLY WITH THE NOTCHES IN THE 4, 1, 5, 2, 3 CODE BARS BUT MAY BE OUT OF ALIGNMENT
MAX. 0.010 INCH
IN THE MARKING DIRECTION.

(2) REQUIREMENT
MAX. 0.002 INCH
CLEARANCE BETWEEN GUIDE PLATE EXTENSION AND SLIDE.
TO ADJUST
POSITION THE GUIDE PLATE BY ITS LOWER ADJUSTING SLOT WITH ITS CLAMP NUTS LOOSENED.

SUPPRESSION CODE BAR MECHANISM

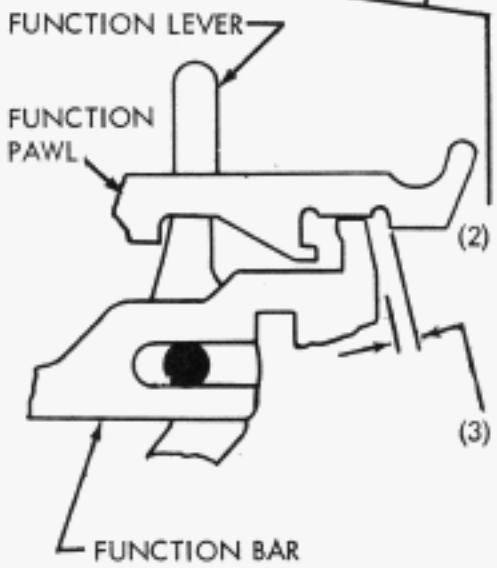

(1) REQUIREMENT
FUNCTION BARS IN REAR POSITION. CALL DIRECTING FUNCTION PAWL HOOKED OVER ITS FUNCTION BAR AND STRIPPED. NOTCH IN SUPPRESSION CODE BAR SHOULD LINE UP VERTICALLY WITH NOTCHES IN 4, 1, 5, 2, 3 CODE BARS BUT MAY BE OUT OF ALIGNMENT
MAX. 0.010 INCH
IN THE MARKING DIRECTION

(2) REQUIREMENT
MAX. 0.002 INCH
CLEARANCE BETWEEN GUIDE PLATE EXTENSION AND SLIDE.
TO ADJUST
POSITION THE GUIDE PLATE BY ITS LOWER ADJUSTING SLOT WITH ITS CLAMP NUTS LOOSENED.

(3) REQUIREMENT
THERE SHOULD BE SOME CLEARANCE BETWEEN THE REAR END OF THE FUNCTION BAR AND THE FACE OF THE NOTCH ON THE FUNCTION PAWL WHEN THE LINE FEED FUNCTION PAWL AND CALL DIRECTING FUNCTION PAWL ARE ALTERNATELY HOOKED OVER THEIR RESPECTIVE FUNCTION BAR.

REFINE THE TWO ADJUSTMENTS ABOVE IF NECESSARY.

FIGURE 2-42. TYPING UNIT, PRINT SUPPRESSION MECHANISM

16. CONTINUOUS SPACING

SOLENOID PLUNGER SPRING
REQUIREMENT
SOLENOID DE-ENERGIZED, SPRING UNHOOKED
MIN. 1 1/2 OZS.
MAX. 3 OZS.
TO PULL SPRING TO POSITION LENGTH.

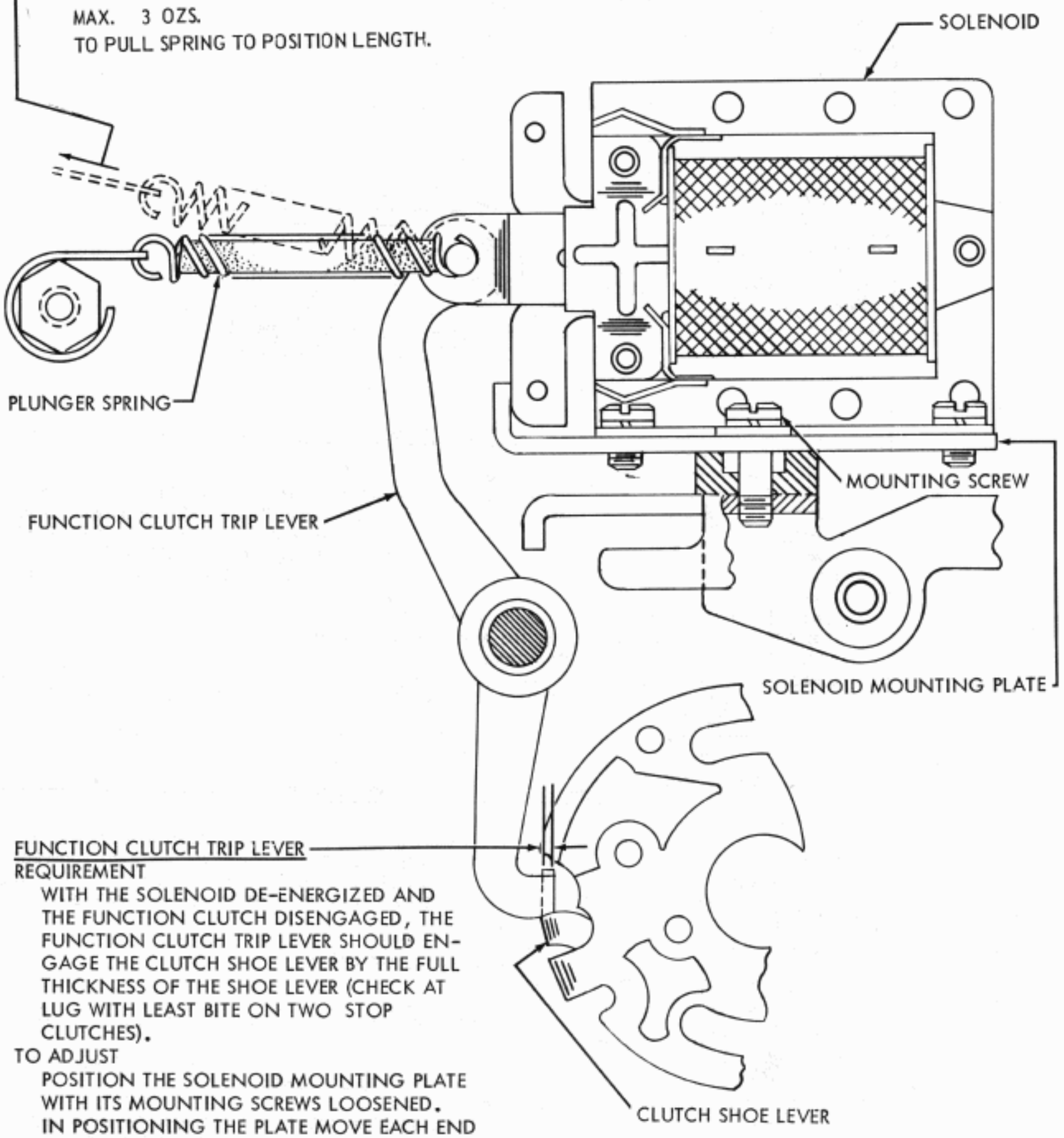

FUNCTION CLUTCH TRIP LEVER
REQUIREMENT
WITH THE SOLENOID DE-ENERGIZED AND THE FUNCTION CLUTCH DISENGAGED, THE FUNCTION CLUTCH TRIP LEVER SHOULD ENGAGE THE CLUTCH SHOE LEVER BY THE FULL THICKNESS OF THE SHOE LEVER (CHECK AT LUG WITH LEAST BITE ON TWO STOP CLUTCHES).
TO ADJUST
POSITION THE SOLENOID MOUNTING PLATE WITH ITS MOUNTING SCREWS LOOSENED. IN POSITIONING THE PLATE MOVE EACH END EQUALLY TO AVOID BINDS IN THE SOLENOID PLUNGER AND FUNCTION CLUTCH TRIP LEVER.

FIGURE 2-43. TYPING UNIT, CONTINUOUS SPACING AND TRIPLE LINE FEED MECHANISM

16. CONTINUOUS SPACING

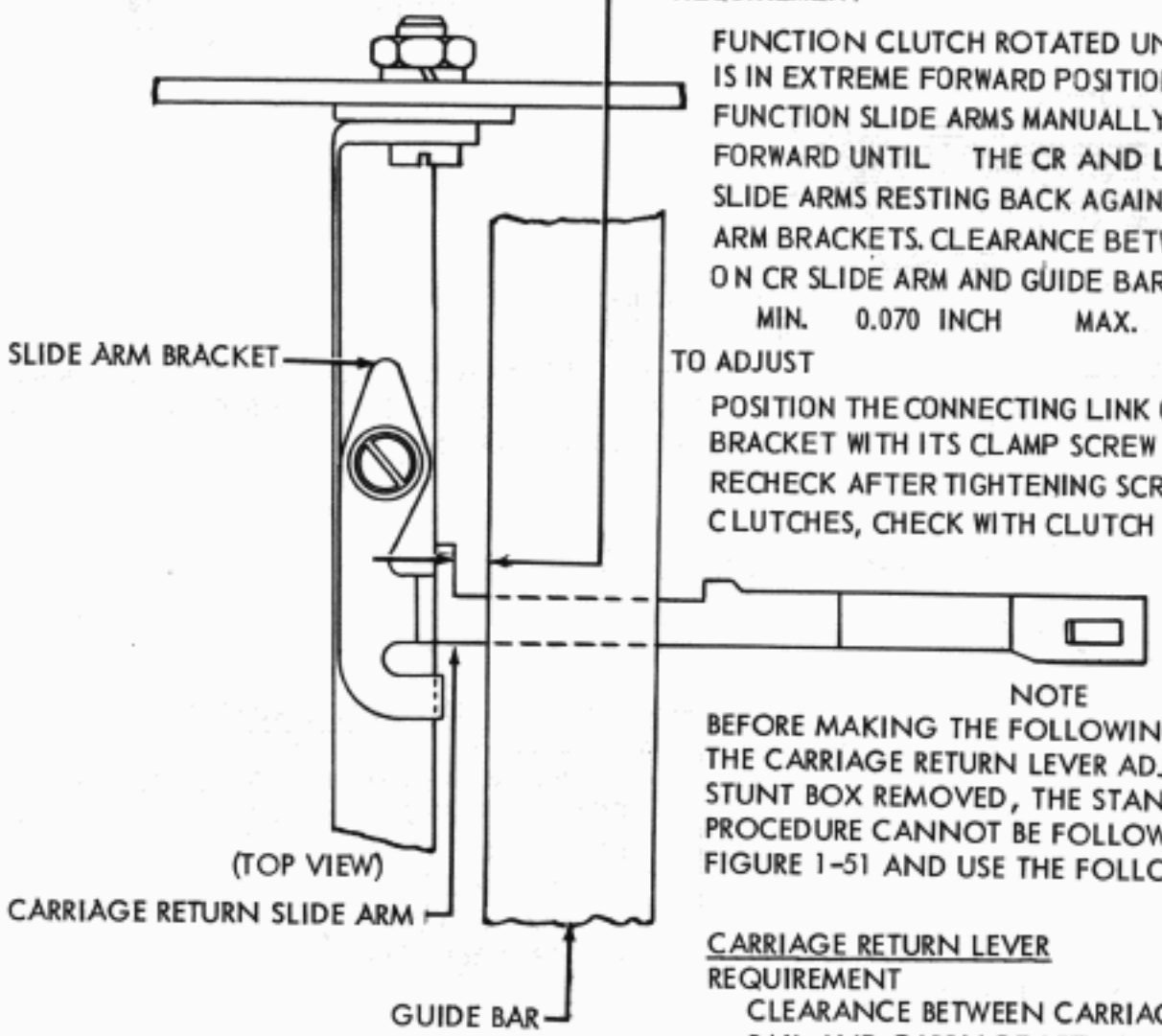

SUPPRESSION BAIL ADJUSTING BRACKET

REQUIREMENT

FUNCTION CLUTCH ROTATED UNTIL SUPPRESSION BAIL IS IN EXTREME FORWARD POSITION. CR AND LF FUNCTION SLIDE ARMS MANUALLY PUSHED FORWARD UNTIL THE CR AND LF LEVERS ARE TRIPPED SLIDE ARMS RESTING BACK AGAINST THEIR SLIDE ARM BRACKETS. CLEARANCE BETWEEN PROJECTION ON CR SLIDE ARM AND GUIDE BAR

MIN. 0.070 INCH MAX. 0.095 INCH

TO ADJUST

POSITION THE CONNECTING LINK ON THE ADJUSTING BRACKET WITH ITS CLAMP SCREW LOOSENED. RECHECK AFTER TIGHTENING SCREW. ON TWO-STOP CLUTCHES, CHECK WITH CLUTCH IN EACH POSITION.

NOTE

BEFORE MAKING THE FOLLOWING ADJUSTMENT CHECK THE CARRIAGE RETURN LEVER ADJUSTMENT. WITH THE STUNT BOX REMOVED, THE STANDARD ADJUSTING PROCEDURE CANNOT BE FOLLOWED. REFER TO FIGURE 1-51 AND USE THE FOLLOWING PROCEDURE.

CARRIAGE RETURN LEVER

REQUIREMENT

CLEARANCE BETWEEN CARRIAGE RETURN LATCH BAIL AND CARRIAGE RETURN LEVER (FIGURE 1-51) SHOULD BE

MIN. 0.006 INCH --- MAX. 0.040 INCH

TO CHECK

PRINTING CARRIAGE IN RETURNED POSITION. TRIP FUNCTION CLUTCH AND ROTATE MAIN SHAFT UNTIL SUPPRESSION BAIL IS IN EXTREME FORWARD POSITION. LOCATE SPACING DRUM SO THAT CARRIAGE RETURN LATCH BAIL RESTS AGAINST CARRIAGE RETURN LEVER EXTENSION.

TO ADJUST

POSITION CR LEVER ON CR LATCH BAIL WITH CLAMP SCREW LOOSENED.

RESET BAIL OPERATING SPRING

REQUIREMENT

FUNCTION RESET BAIL IN FORWARD POSITION

MIN. 2 1/4 LBS.

MAX. 3 1/2 LBS.

TO START BAIL MOVING.

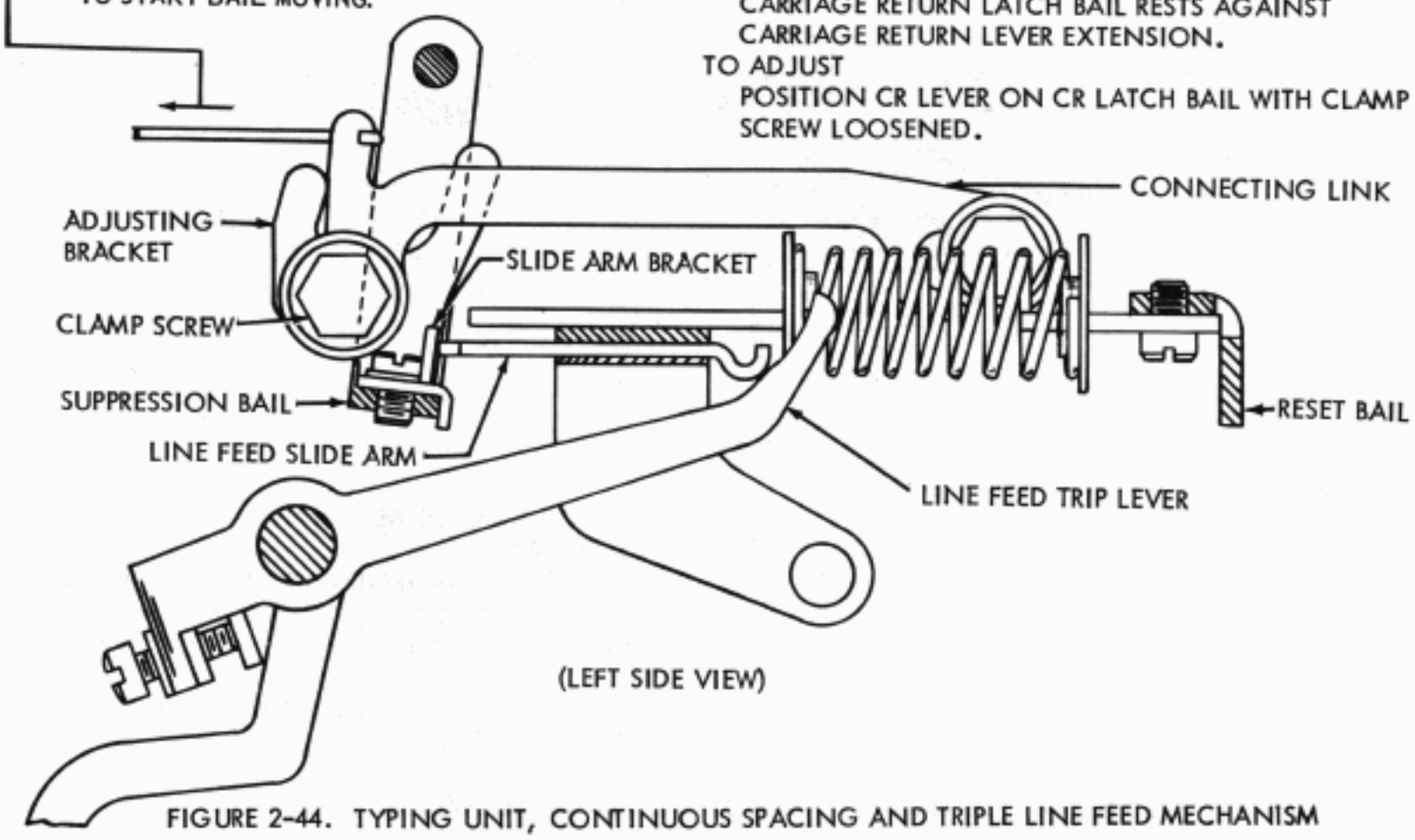

FIGURE 2-44. TYPING UNIT, CONTINUOUS SPACING AND TRIPLE LINE FEED MECHANISM

17. LINE TEST KEY

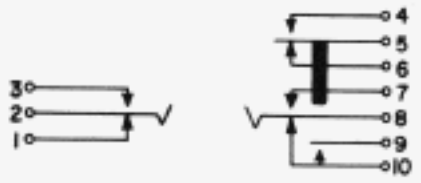

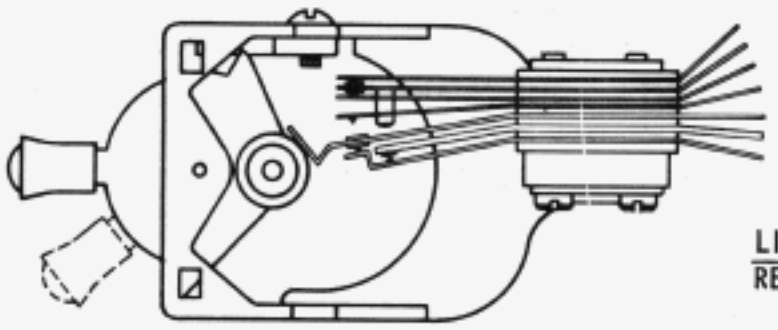

LINE TEST KEY
REQUIREMENT
WHEN KNOB IS MOVED TO DOWNWARD POSITION CONTACTS 9 - 10 SHOULD CLOSE BEFORE CONTACTS 8 - 10 AND 5 - 6 OPEN.

FIGURE 2-45. LINE TEST KEY

18. PAPER-OUT ALARM

LATER DESIGN
SEE FIGURE 2-46A

BELL CRANK FOLLOWER SPRING
REQUIREMENT
SPRING SCALE APPLIED TO BELL CRANK FOLLOWER WHERE IT MAKES CONTACT WITH PAPER ROLL
MIN. 2 OZS.
MAX. 3 OZS.
TO START BELL CRANK MOVING.

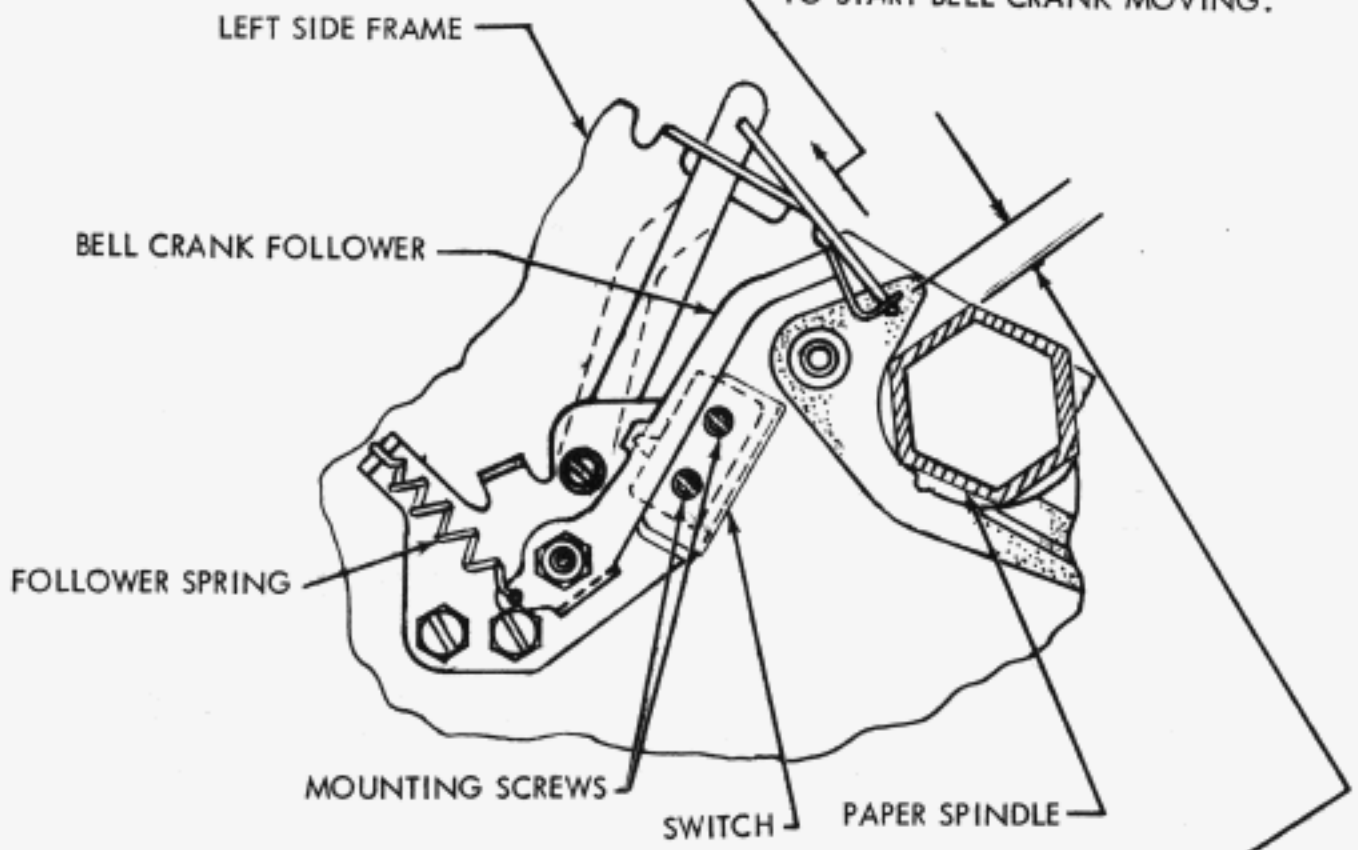

BELL CRANK FOLLOWER
REQUIREMENT
THE BELL CRANK FOLLOWER SHOULD BE APPROXIMATELY 1/4 INCH FROM A FLAT SIDE OF THE PAPER SPINDLE.
TO ADJUST
POSITION THE SWITCH WITH ITS MOUNTING SCREWS LOOSENED.

FIGURE 2-46. TYPING UNIT, PAPER-OUT ALARM MECHANISM

18. PAPER-OUT ALARM (LATER DESIGN).

(A) SWITCH POSITION

REQUIREMENT --- HORIZONTAL AXIS OF SWITCH SHALL LIE IN A PLANE PARALLEL TO THE SWITCH BRACKET WHEN THE SWITCH IS MOVED TOWARD UPPER LIMIT OF ITS TRAVEL IN THE MOUNTING HOLES.

TO ADJUST --- WITH ITS MOUNTING SCREWS (2) LOOSENED, POSITION AND ALIGN THE SWITCH.

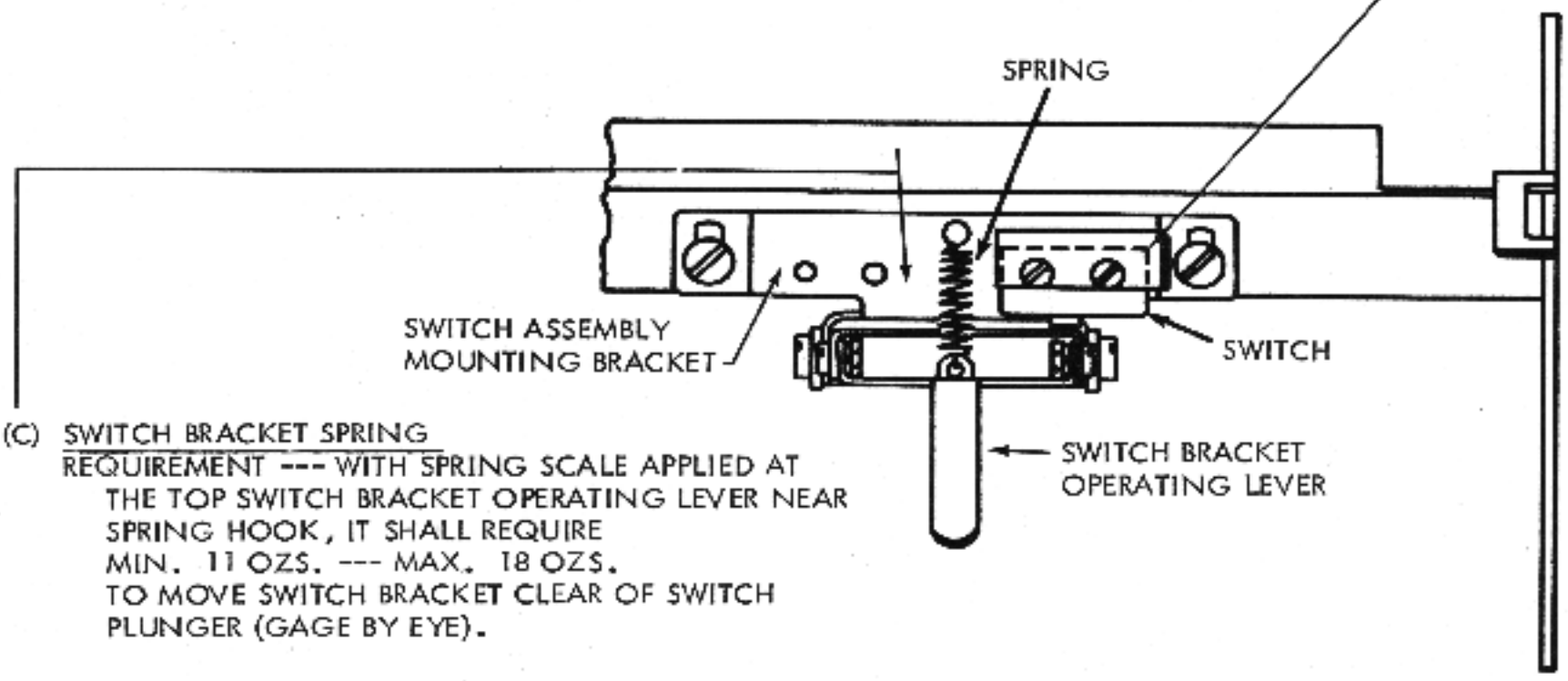

(C) SWITCH BRACKET SPRING

REQUIREMENT --- WITH SPRING SCALE APPLIED AT THE TOP SWITCH BRACKET OPERATING LEVER NEAR SPRING HOOK, IT SHALL REQUIRE MIN. 11 OZS. --- MAX. 18 OZS. TO MOVE SWITCH BRACKET CLEAR OF SWITCH PLUNGER (GAGE BY EYE).

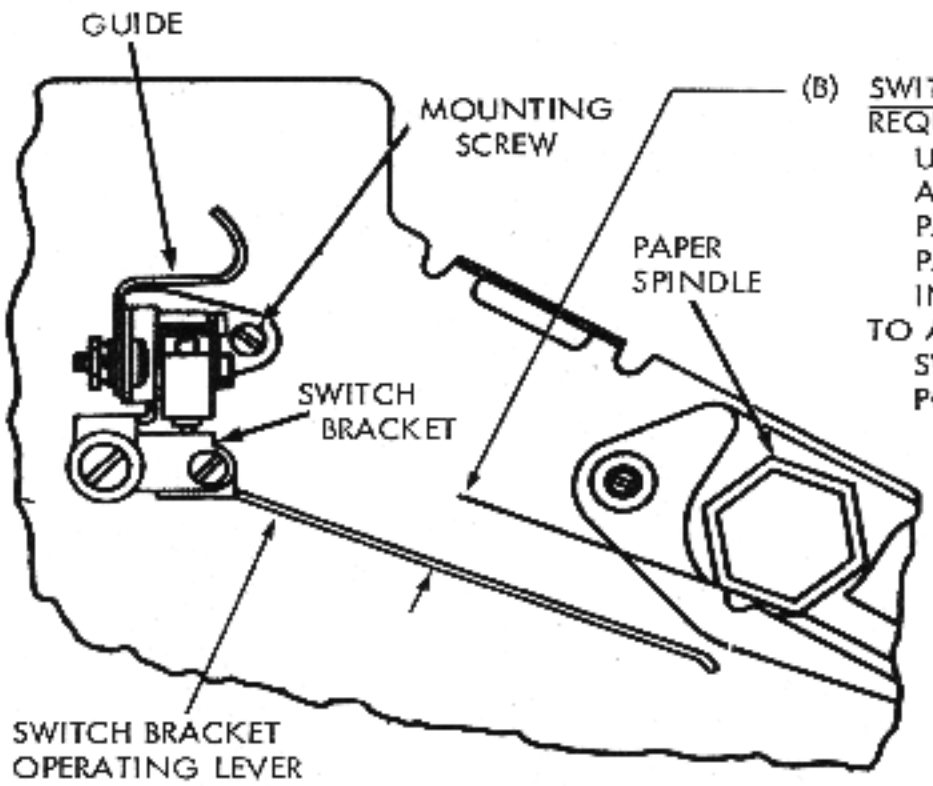

(B) SWITCH OPERATING LEVER

REQUIREMENT --- WITH PAPER ROLL REMOVED, UPPER SURFACE OF SWITCH BRACKET OPERATING LEVER SHALL LIE IN A PLANE THAT IS PARALLEL WITH UNDER SIDE OF HEXAGONAL PAPER SPINDLE AND REST APPROXIMATELY 1/4 INCH FROM THE SPINDLE.

TO ADJUST --- LOOSEN SCREW THAT SECURE THE SWITCH ASSEMBLY MOUNTING BRACKET AND POSITION THE ASSEMBLY UPWARD OR DOWNWARD.

FIGURE 2-46A TYPING UNIT, PAPER-OUT ALARM MECHANISM

19. OFF-LINE CONTACT

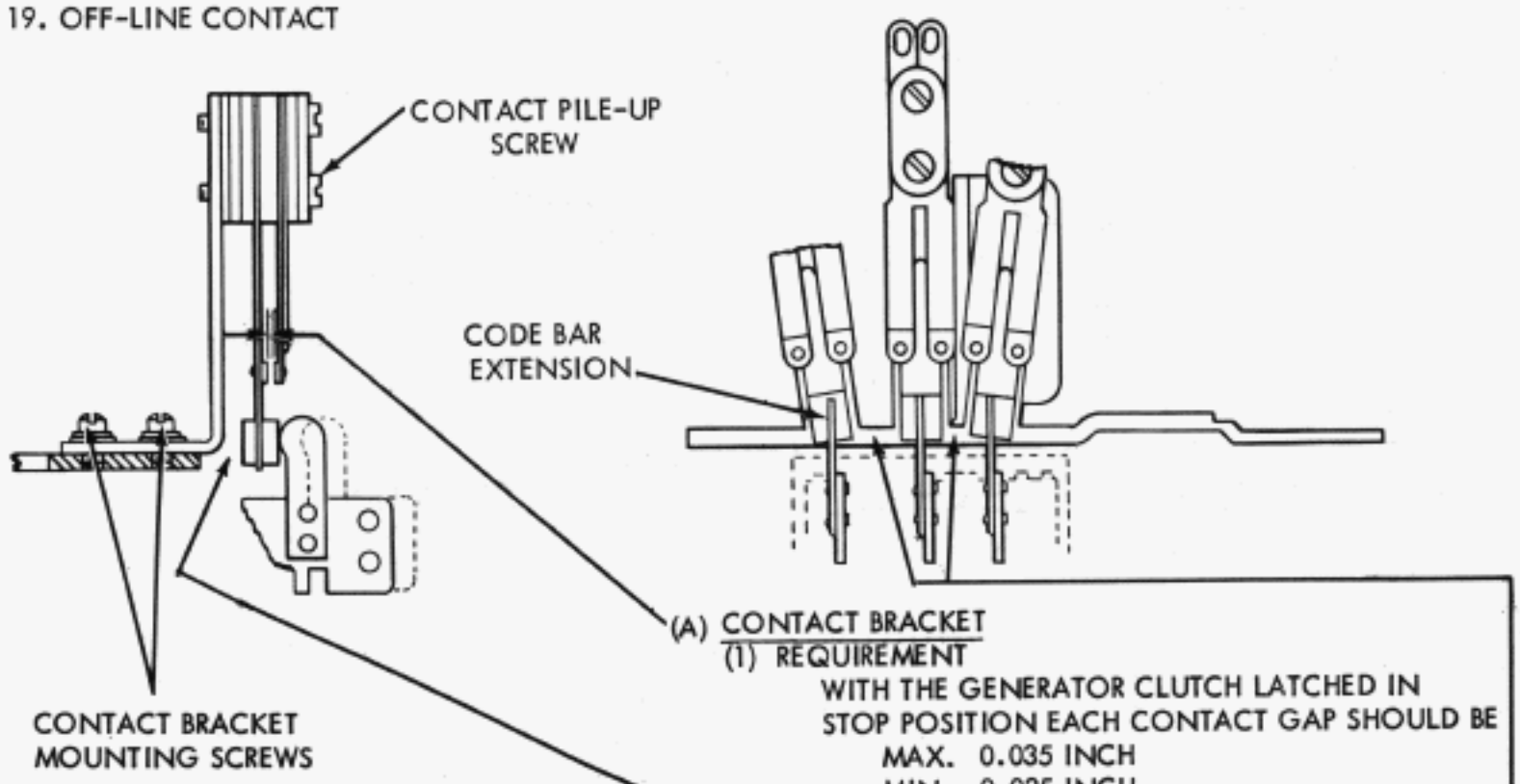

(A) CONTACT BRACKET

(1) REQUIREMENT

WITH THE GENERATOR CLUTCH LATCHED IN STOP POSITION EACH CONTACT GAP SHOULD BE

MAX. 0.035 INCH
MIN. 0.025 INCH

(2) REQUIREMENT

WITH THE CODE BAR RESET BAIL IN ITS EXTREME LEFT POSITION THE CLEARANCE BETWEEN THE BAKELITE INSULATOR AND CONTACT BRACKET SHOULD BE

MIN. 0.015 INCH

(3) REQUIREMENT

CLEARANCE BETWEEN THE BAKELITE INSULATORS OF THE CONTACT ASSEMBLIES SHOULD BE

MIN. 0.050 INCH

(4) REQUIREMENT

EACH BAKELITE INSULATOR SHOULD BE APPROXIMATELY CENTERED ON ITS RESPECTIVE CODE BAR EXTENSION

TO ADJUST

POSITION THE CONTACT BRACKETS WITH THEIR MOUNTING SCREWS LOOSENED. IF NECESSARY, LOOSEN CONTACT PILE-UP SCREWS OR BEND CONTACT SPRINGS.

SOLENOID BAIL SPRING

REQUIREMENT

BACKSPACE LINK HELD AWAY MIN. 2 OZS. MAX. 3 OZS. TO MOVE SOLENOID ARMATURE AWAY FROM SWITCH PLUNGER.

(B) SOLENOID MOUNTING BRACKET POSITION

REQUIREMENT

WITH THE SOLENOID ATTRACTED AND WITH 12 OZS. OF PRESSURE APPLIED TO THE TRIP LINK IN A REARWARD DIRECTION THE CLEARANCE BETWEEN THE TRIP LINK AND THE SOLENOID OPERATED BAIL SHOULD BE

MIN. SOME
MAX. 0.010 INCH

TO ADJUST

POSITION THE SOLENOID MOUNTING BRACKET WITH ITS MOUNTING SCREWS LOOSENED.

FIGURE 2-47. KEYBOARD, OFF-LINE CONTACTS AND EXTERNAL TAPE BACKSPACE MECHANISM

19. OFF-LINE CONTACT

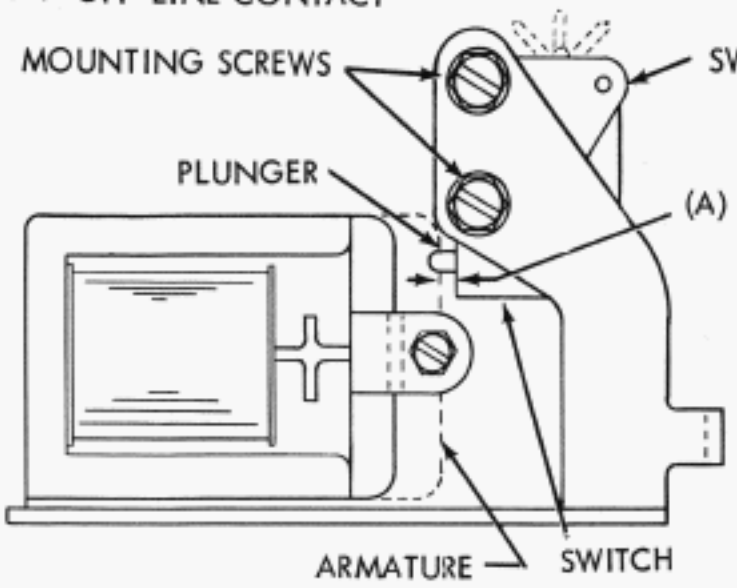

(A) SOLENOID OPERATED SWITCH PLATE POSITION

REQUIREMENT

WITH THE SOLENOID DE-ENERGIZED, THE CLEARANCE BETWEEN ARMATURE AND THE SWITCH (NOT THE PLUNGER) SHOULD BE

MIN. 0.025 INCH
MAX. 0.035 INCH

TO ADJUST

POSITION THE SWITCH PLATE WITH ITS MOUNTING SCREWS LOOSENED.

(C) SWITCH OPERATING LEVER SPRING

REQUIREMENT

MIN. 7 1/2 OZS. MAX. 10 1/2 OZS.
TO MOVE LEVER AWAY FROM PLUNGER.

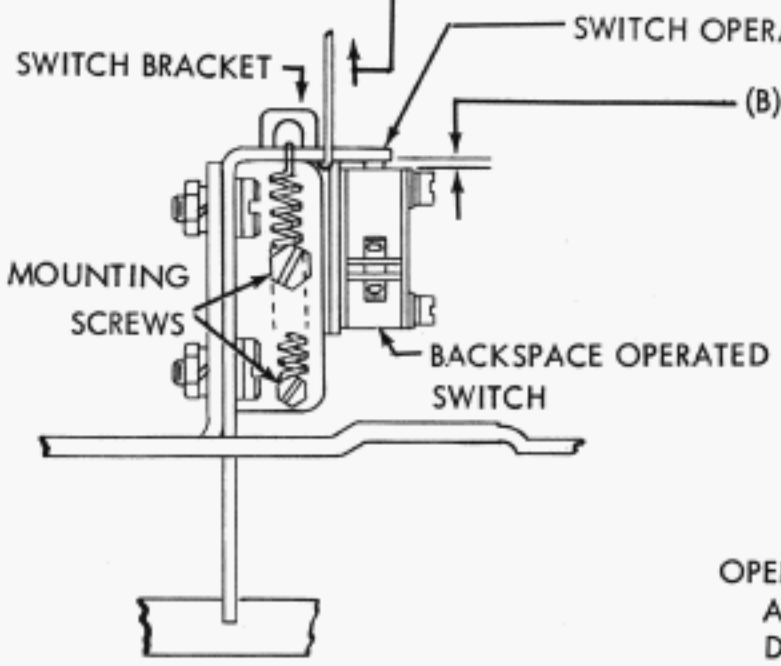

(B) BACKSPACE KEYLEVER OPERATED SWITCH POSITION

REQUIREMENT

WITH THE BACKSPACE KEYLEVER IN ITS NORMAL UNOPERATED POSITION, THE CLEARANCE BETWEEN THE BACKSPACE KEYLEVER OPERATED SWITCH AND THE SWITCH OPERATING LEVER SHOULD BE

MAX. 0.055 INCH

TO ADJUST

POSITION THE SWITCH BRACKET WITH ITS MOUNTING SCREWS LOOSENED.

OPERATIONAL CHECK: WITH A TYPING UNIT ON THE BASE, AND AC POWER APPLIED (SELECTOR MAGNETS ENERGIZED), DEPRESS LOCAL BACKSPACE KEYLEVER. CUT OFF AC POWER. RELEASE THE LOCAL BACKSPACE KEYLEVER SO THAT THE BACKSPACE LINK CLEARS THE SOLENOID OPERATED BAIL EXTENSION AND LATCHES UP UNDER IT BY AT LEAST 0.010 INCH CLEARANCE. WITH AC POWER APPLIED THE BACKSPACE SOLENOID SHOULD BECOME ENERGIZED. IF NECESSARY, REFINE THE SOLENOID OPERATED SWITCH PLATE POSITION.

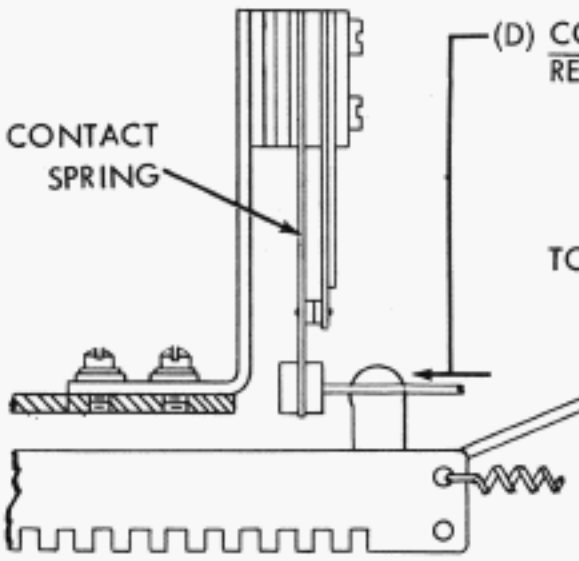

(D) CONTACT SPRING TENSION

REQUIREMENT

WITH CR KEYLEVER DEPRESSED CHECK FRONT CONTACT
WITH SPACE BAR DEPRESSED CHECK CENTER AND REAR CONTACTS
MIN. 1 OZ. MAX. 2 OZS.
TO OPEN CONTACTS

TO ADJUST

BEND CONTACT SPRING. IF NECESSARY REMOVE CONTACT ASSEMBLY.

(E) CODE BAR SPRING TENSION

REQUIREMENT

SPACE BAR DEPRESSED
MIN. 3 OZS. MAX. 4 OZS.
TO START EACH CODE BAR MOVING

FIGURE 2-48. KEYBOARD, EXTERNAL TAPE BACKSPACE AND OFF-LINE CONTACT MECHANISM

20. VERTICAL TABULATION AND TRANSMITTER DISTRIBUTOR CONTROL

(C) PAGE FEED-OUT GEAR PLAY

REQUIREMENT

BARELY PERCEPTIBLE BACKLASH BETWEEN IDLER GEAR AND FEED-OUT GEAR

TO ADJUST

POSITION GEAR PIVOT POST WITH NUT LOOSENED.

NOTE: GEARS SHOULD MESH ACCURATELY WHEN CHECKED AT 3 EQUAL DISTANCES AROUND CIRCUMFERENCE OF GEAR.

(D) BLOCKING LEVER

SEE FIGURE 2-5CA

(E) INDEXING DISK

REQUIREMENT

CLEARANCE BETWEEN INDEX PLATE AND PAWL SHOULD BE

MIN. 0.020 INCH --- MAX. 0.040 INCH

TO CHECK

LINE FEED CLUTCH DISENGAGED. INDEX PLATE ADJACENT TO PAWL. SLACK IN GEARS TAKEN UP TO MAKE GAP A MAXIMUM.

TO ADJUST

PULL FEED-OUT GEAR OUT OF ENGAGEMENT WITH IDLER GEAR. TURN FEED-OUT GEAR HAND WHEEL CLOCKWISE UNTIL INDEX PLATE JUST OPERATES THE PAWL, THEN ENGAGE FIRST TOOTH ON IDLER. POSITION INDEXING DISK WITH THREE MOUNTING SCREWS LOOSENED.

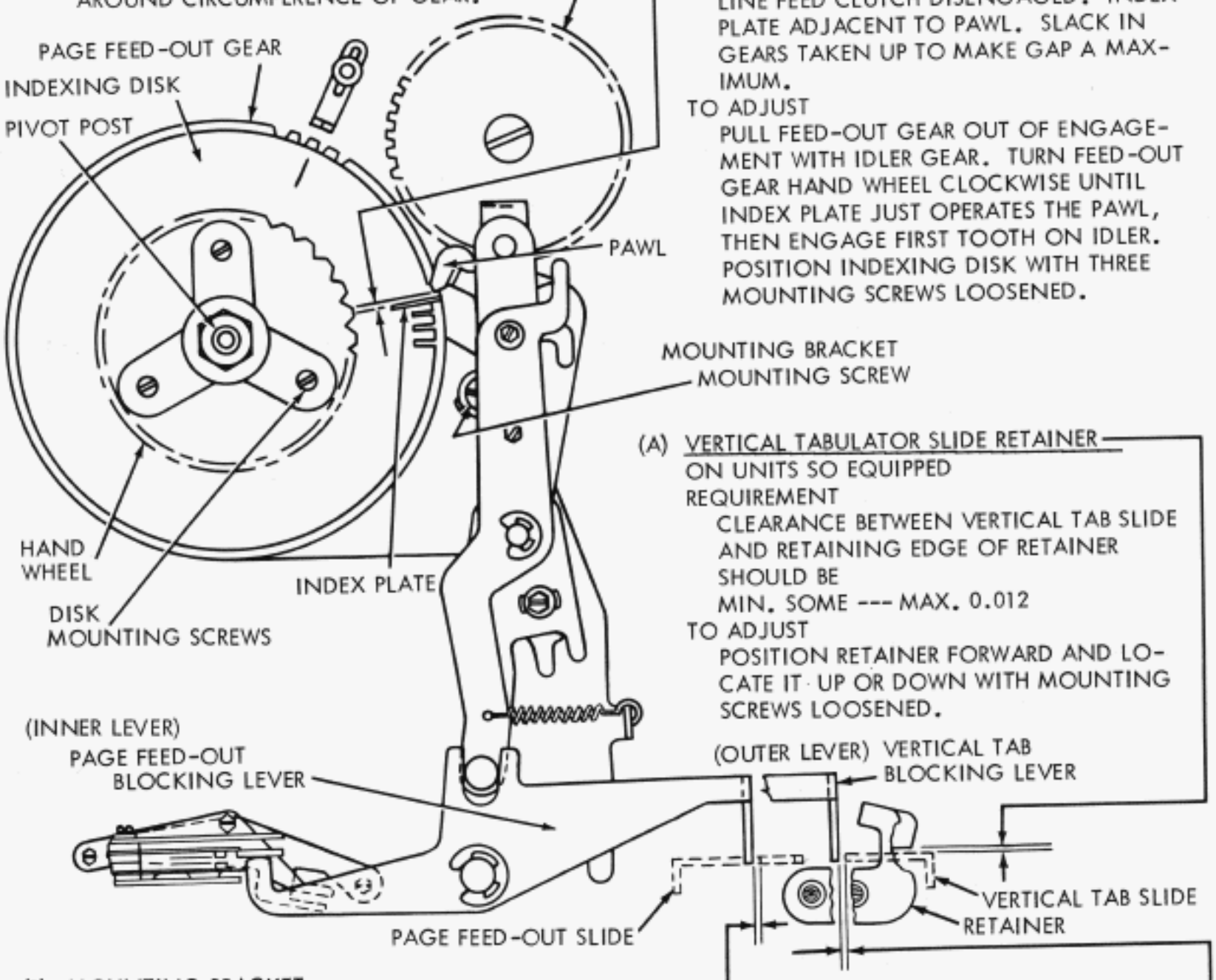

(A) VERTICAL TABULATOR SLIDE RETAINER

ON UNITS SO EQUIPPED

REQUIREMENT

CLEARANCE BETWEEN VERTICAL TAB SLIDE AND RETAINING EDGE OF RETAINER SHOULD BE

MIN. SOME --- MAX. 0.012

TO ADJUST

POSITION RETAINER FORWARD AND LOCATE IT UP OR DOWN WITH MOUNTING SCREWS LOOSENED.

(B) MOUNTING BRACKET

REQUIREMENT

1. CLEARANCE BETWEEN FEED-OUT BLOCKING LEVER (INNER LEVER) AND FEED-OUT SLIDE MIN. 0.002 INCH --- MAX. 0.015 INCH

TO CHECK

SELECT UPPER CASE "Z" AND ROTATE MAIN SHAFT UNTIL PAGE FEED-OUT SLIDE IS IN ITS MOST FORWARD POSITION. TAKE UP PLAY IN PAGE FEED-OUT BLOCKING LEVER TO MAKE CLEARANCE A MINIMUM.

2. CLEARANCE BETWEEN VERTICAL TAB SLIDE AND VERTICAL TAB BLOCKING LEVER (OUTER LEVER) MIN. 0.002 INCH

TO CHECK

SELECT UPPER CASE "J" AND ROTATE MAIN SHAFT UNTIL VERTICAL TAB SLIDE IS IN ITS MOST FORWARD POSITION. TAKE UP PLAY IN VERTICAL TAB BLOCKING LEVER TO MAKE CLEARANCE A MINIMUM.

TO ADJUST

POSITION LOWER PORTION OF MOUNTING BRACKET WITH MOUNTING SCREWS LOOSENED.

FIGURE 2-49. TYPING UNIT, VERTICAL TABULATION AND TRANSMITTER DISTRIBUTOR CONTROL

20. VERTICAL TABULATION AND TRANSMITTER DISTRIBUTOR CONTROL

(H) POINTER
REQUIREMENT
LINE FEED CLUTCH DISENGAGED. INDEX PLATE ADJACENT TO PAWL. POINTER SHOULD LINE UP WITH NOTCH IN INDEXING DISK AND CLEAR ANY INDEX PLATE BY APPROXIMATELY 1/16 INCH.
TO ADJUST
POSITION POINTER ON SIDE FRAME WITH ITS MOUNTING SCREW LOOSENED.

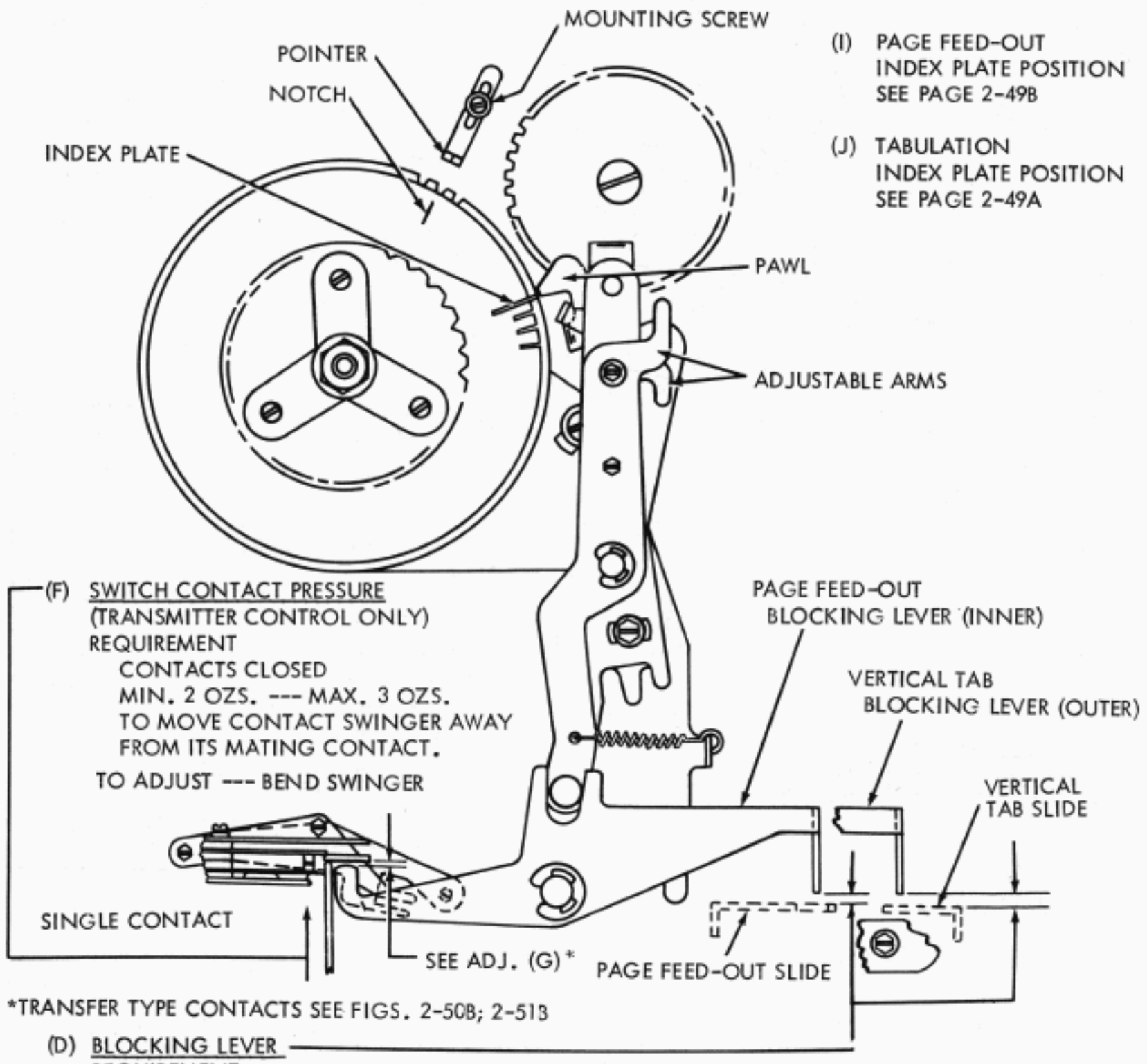

(I) PAGE FEED-OUT
INDEX PLATE POSITION
SEE PAGE 2-49B

(J) TABULATION
INDEX PLATE POSITION
SEE PAGE 2-49A

(F) SWITCH CONTACT PRESSURE
(TRANSMITTER CONTROL ONLY)
REQUIREMENT
CONTACTS CLOSED
MIN. 2 OZS. --- MAX. 3 OZS.
TO MOVE CONTACT SWINGER AWAY
FROM ITS MATING CONTACT.
TO ADJUST --- BEND SWINGER

*TRANSFER TYPE CONTACTS SEE FIGS. 2-50B; 2-51B

(D) BLOCKING LEVER
REQUIREMENT
CLEARANCE BETWEEN BOTTOM OF BLOCKING LEVER AND TOP OF SLIDE WHEN PAWL IS ON PEAK OF INDEX PLATE SHOULD BE
MIN. 0.005 INCH --- MAX. 0.045 INCH
TO ADJUST
TRIP LINE FEED CLUTCH. ROTATE MAIN SHAFT UNTIL PAWL IS ON PEAK OF INDEX PLATE. POSITION ADJUSTABLE ARM WITH MOUNTING SCREWS LOOSENED. MAKE ADJUSTMENT FOR EACH BLOCKING LEVER.

2-50A TYPING UNIT, VERTICAL TABULATION AND TRANSMITTER DISTRIBUTOR CONTROL

20. VERTICAL TABULATION AND TRANSMITTER DISTRIBUTOR CONTROL

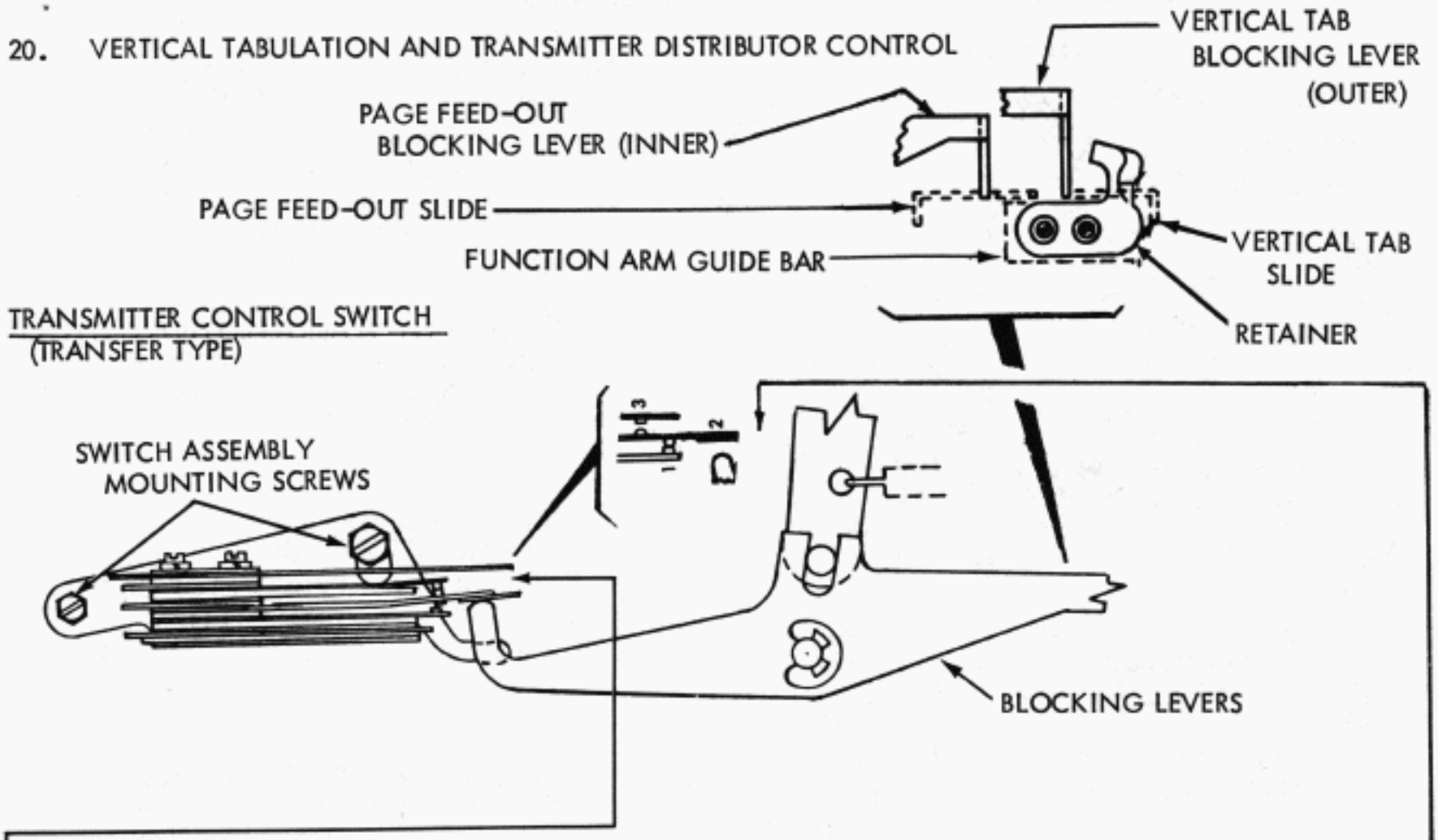

TRANSMITTER CONTROL SWITCH (TRANSMITTER CONTROL ONLY)

REQUIREMENTS --- FOR TRANSFER TYPE CONTACTS

1. WITH NORMALLY CLOSED (LOWER) CONTACTS CLOSED, CLEARANCE BETWEEN INSULATED EXTENSION OF SWINGER AND LOBES OF FEED-OUT AND VERTICAL TABULATOR BLOCKING LEVER SHALL BE
   MIN. SOME CLEARANCE ---------- MAX 0.005 INCH

   TO CHECK --- ROTATE MAINSHAFT UNTIL FEED-OUT AND VERTICAL TABULATOR BLOCKING LEVERS ARE UNOPERATED (BLOCKING LEVERS RESTING ON SLIDES).

   TO ADJUST - WITH TRANSMITTER CONTROL SWITCH MOUNTING SCREWS LOOSENED, POSITION THE CONTACT ASSEMBLY.

2. WITH THE NORMALLY OPEN (UPPER) CONTACTS CLOSED
   (a). LOBE OF FEED-OUT BLOCKING LEVER (INNER LEVER) SHALL FULLY ENGAGE INSULATED EXTENSION OF CONTACT SWINGER.
   (b). THE FEED-OUT BLOCKING LEVER SHALL REST FIRMLY ON THE FUNCTION ARM GUIDE BAR (INTERNAL --- CHECK BY LIFTING LEVER LIGHTLY AT CONTACT END) AND ALSO SEPARATE THE NORMALLY OPEN CONTACT SPRING FROM IT STIFFENER AS THE UPPER CONTACT CLOSES.

   TO CHECK --- SELECT FEED-OUT CODE COMBINATION, ROTATE MAIN SHAFT UNTIL FEED-OUT SLIDE IS IN ITS EXTREME FORWARD POSITION AND FEED-OUT BLOCKING LEVER DROPS BEHIND ITS SLIDE TO CLOSE NORMALLY OPENED CONTACTS.

   TO ADJUST --- WITH CONTACT PILE-UP MOUNTING SCREWS LOOSENED, POSITION THE ASSEMBLY.

3. WITH THE NORMALLY OPEN (UPPER) CONTACTS CLOSED
   (a). LOBE OF VERTICAL TABULATOR BLOCKING LEVER (OUTER) SHALL FULLY ENGAGE THE INSULATED EXTENSION OF THE SWINGER.
   (b). THE VERTICAL TABULATOR BLOCKING LEVER SHALL REST FIRMLY ON THE FUNCTION ARM GUIDE BAR (INTERNAL --- CHECK BY LIFTING LEVER LIGHTLY AT CONTACT END.) AND ALSO SEPARATE NORMALLY OPEN CONTACT SPRING FROM ITS STIFFENER AS UPPER CONTACT CLOSES.

   TO CHECK --- SELECT VERTICAL TABULATOR COMBINATION AND PROCEED AS IN ITEM TO CHECK OF REQUIREMENT 2 ABOVE.

2-50B TYPING UNIT, VERTICAL TABULATOR AND TRANSMITTER DISTRIBUTOR CONTROL

20. VERTICAL TABULATION AND TRANSMITTER DISTRIBUTOR CONTROL

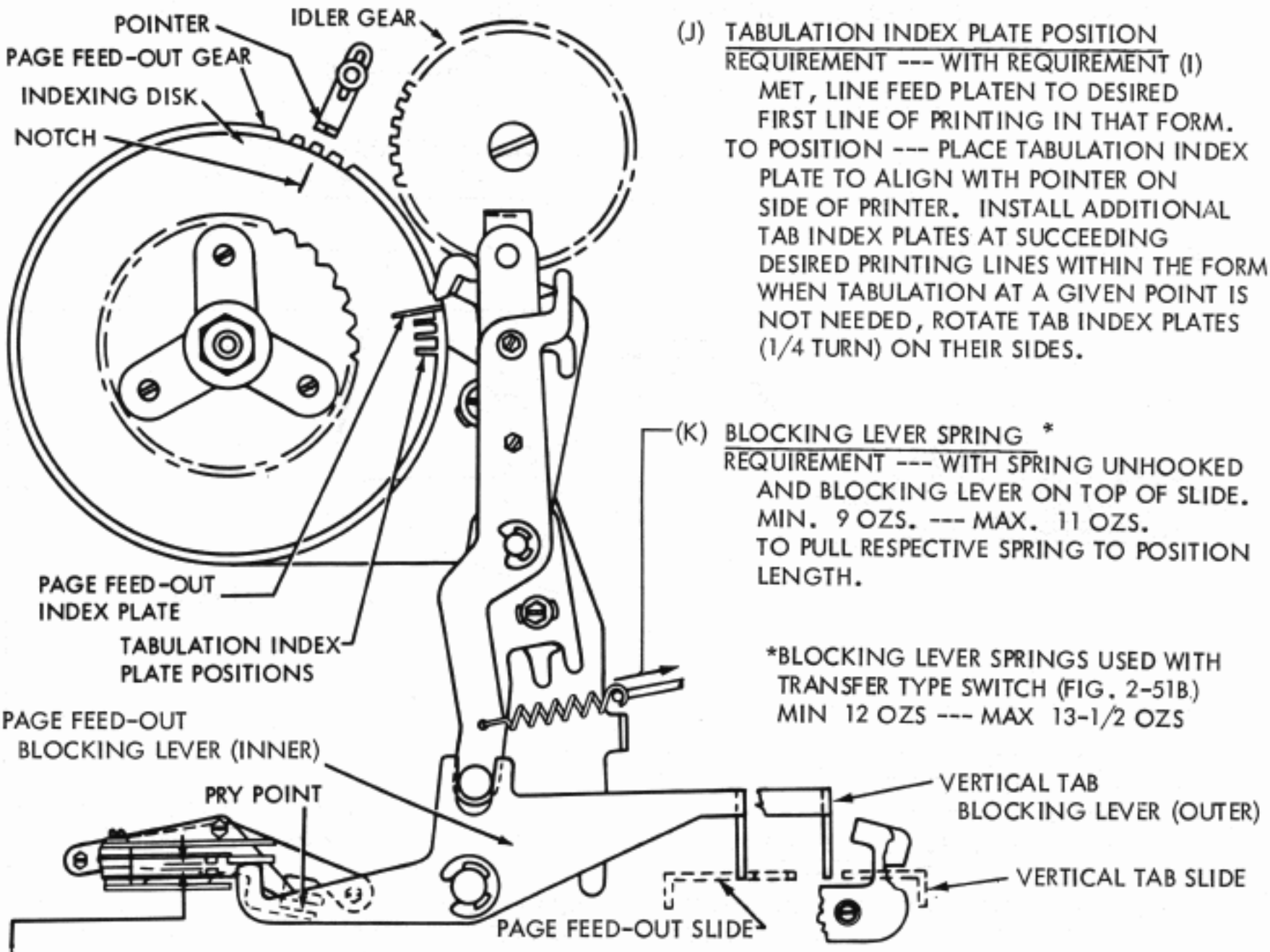

(J) TABULATION INDEX PLATE POSITION
REQUIREMENT --- WITH REQUIREMENT (I) MET, LINE FEED PLATEN TO DESIRED FIRST LINE OF PRINTING IN THAT FORM.
TO POSITION --- PLACE TABULATION INDEX PLATE TO ALIGN WITH POINTER ON SIDE OF PRINTER. INSTALL ADDITIONAL TAB INDEX PLATES AT SUCCEEDING DESIRED PRINTING LINES WITHIN THE FORM. WHEN TABULATION AT A GIVEN POINT IS NOT NEEDED, ROTATE TAB INDEX PLATES (1/4 TURN) ON THEIR SIDES.

(K) BLOCKING LEVER SPRING *
REQUIREMENT --- WITH SPRING UNHOOKED AND BLOCKING LEVER ON TOP OF SLIDE. MIN. 9 OZS. --- MAX. 11 OZS. TO PULL RESPECTIVE SPRING TO POSITION LENGTH.

*BLOCKING LEVER SPRINGS USED WITH TRANSFER TYPE SWITCH (FIG. 2-51B.) MIN 12 OZS --- MAX 13-1/2 OZS

(G) TRANSMITTER CONTROL SWITCH (TRANSMITTER CONTROL ONLY)
REQUIREMENTS --- FOR SINGLE-CONTACT TYPE CONTROL

1. WITH TRANSMITTER CONTROL CONTACTS CLOSED, THERE SHOULD BE SOME CLEARANCE BETWEEN INSULATED EXTENSION OF SWINGER AND LOBE OF FEED-OUT AND VERTICAL TABULATOR BLOCKING LEVERS.
   TO CHECK - ROTATE MAIN SHAFT UNTIL FEED-OUT AND VERTICAL TABULATOR BLOCKING LEVERS ARE UNOPERATED (RESTING ON TOP OF SLIDES).
   TO ADJUST - POSITION THE CONTACT ASSEMBLY WITH ITS MOUNTING SCREWS LOOSENED.
2. WITH TRANSMITTER CONTROL CONTACTS OPENED BY FEED-OUT BLOCKING LEVER, CLEARANCE BETWEEN SWITCH CONTACTS SHALL BE
   MIN 0.010 INCH ---------- MAX 0.020 INCH
   TO CHECK - SELECT FEED-OUT CODE COMBINATION. ROTATE MAIN SHAFT UNTIL FEED-OUT SLIDE IS IN ITS EXTREME FORWARD POSITION AND FEED-OUT BLOCKING LEVER DROPS BEHIND ITS SLIDE TO OPEN CONTACTS
   TO ADJUST - REFINE REQUIREMENT NO. 1 ABOVE.
3. WITH CONTROL CONTACTS OPENED BY VERTICAL TABULATOR BLOCKING LEVER CLEARANCE BETWEEN SWITCH CONTACTS SHOULD BE
   MIN 0.010 INCH ---------- MAX 0.020 INCH
   TO CHECK - SELECT VERTICAL TABULATOR CODE COMBINATION. ROTATE MAIN SHAFT UNTIL VERTICAL TAB SLIDE IS IN ITS EXTREME FORWARD POSITION AND VERTICAL TABULATOR BLOCKING LEVER DROPS BEHIND ITS SLIDE
   TO ADJUST - REFINE REQUIREMENT NO. 1. ABOVE.

2-51A TYPING UNIT, VERTICAL TABULATOR AND TRANSMITTER DISTRIBUTOR CONTROL

20. VERTICAL TABULATION AND TRANSMITTER DISTRIBUTOR CONTROL

(I) PAGE FEED-OUT INDEX PLATE POSITION

REQUIREMENT --- PLACE AN INDEX PLATE IN THE NUMBERED SLOTS ON DISK CORRESPONDING TO LENGTH OF PAGE FORM TO BE USED. SYNCHRONIZE PAGE FEED-OUT WITH A FORM BY POSITIONING FORM SO THAT TYPING UNIT WILL PRINT IN FIRST TYPING LINE OF THE FORM. WHEN TYPING UNIT IS IN STOP POSITION, TOP OF RIBBON GUIDE SHOULD ALIGN WITH BOTTOM OF PRINTING LINE.

TO POSITION --- WITH PAGE FORM IN DESIRED POSITION, DISENGAGE PAGE FEED-OUT GEAR FROM ITS IDLER GEAR. ROTATE FEED-OUT GEAR UNTIL NOTCH IN INDEXING DISK ALIGNS WITH POINTER ON SIDE OF PRINTER, RE-ENGAGE GEARS.

SWITCH CONTACTS (TRANSMITTER CONTROL ONLY)

REQUIREMENTS --- FOR TRANSFER TYPE CONTROL SWITCH

1. WITH NORMALLY CLOSED (LOWER) CONTACTS CLOSED, LIFT SWINGER FREE OF MATING CONTACT. IT SHALL REQUIRE A MINIMUM OF 30 GRAMS TO MOVE LOWER CONTACT SPRING AWAY FROM ITS STIFFENER.

   TO ADJUST - FORM THE LOWER CONTACT SPRING BY BENDING.

2. WITH LOWER CONTACT CLOSED

   MIN 30 GRAMS ---------- MAX 45 GRAMS.

   TO MOVE SWINGER FROM ITS MATING CONTACTS.

   TO ADJUST - FORM THE SWINGER BY BENDING.

3. WITH LOWER CONTACT CLOSED

   (a) GAP BETWEEN UPPER CONTACT AND MATING CONTACT OF SWINGER

   MIN 0.008 INCH ---------- MAX 0.015 INCH

   TO ADJUST - POSITION STIFFENER OF NORMALLY CLOSED CONTACT.

   (b) WITH A GAP OF 0.008 TO 0.015 INCH, IT SHALL REQUIRE

   MIN 25 GRAMS ---------- MAX 35 GRAMS

   TO PULL UPPER CONTACT AWAY FROM ITS STIFFENER

   TO ADJUST - FORM THE UPPER CONTACT SPRING BY BENDING.

   RECHECK REQUIREMENT (a).

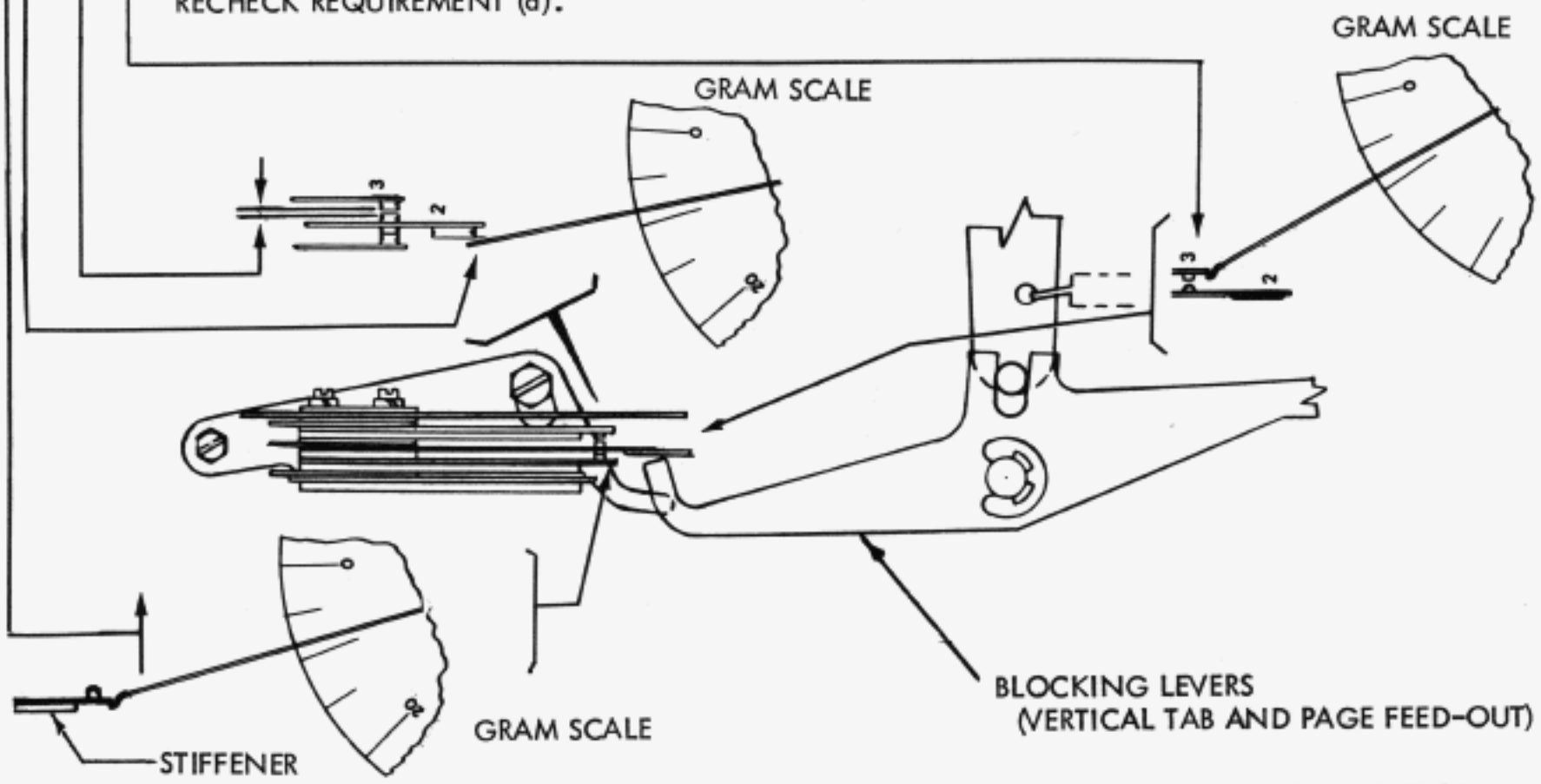

FIGURE 2-51B TYPING UNIT, VERTICAL TABULATION AND TRANSMITTER DISTRIBUTOR CONTROL

20. VERTICAL TABULATION AND TRANSMITTER DISTRIBUTOR CONTROL

(L) LINE FEED CLUTCH TRIP LEVER SPRING
SEE FIGURE 1-31

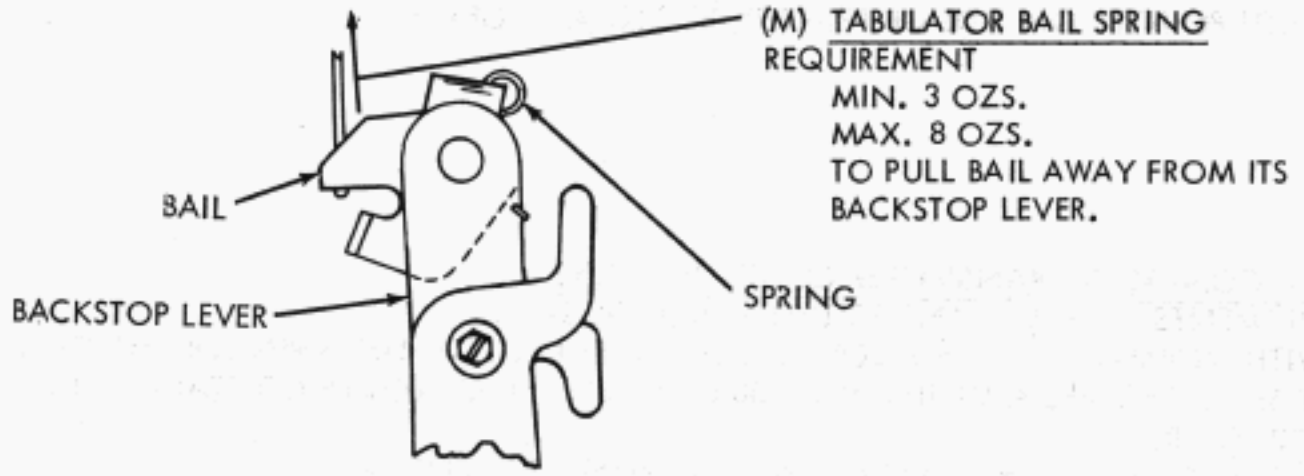

(O) STUNT BOX SWITCH SPRING
SEE FIGURE 1-75

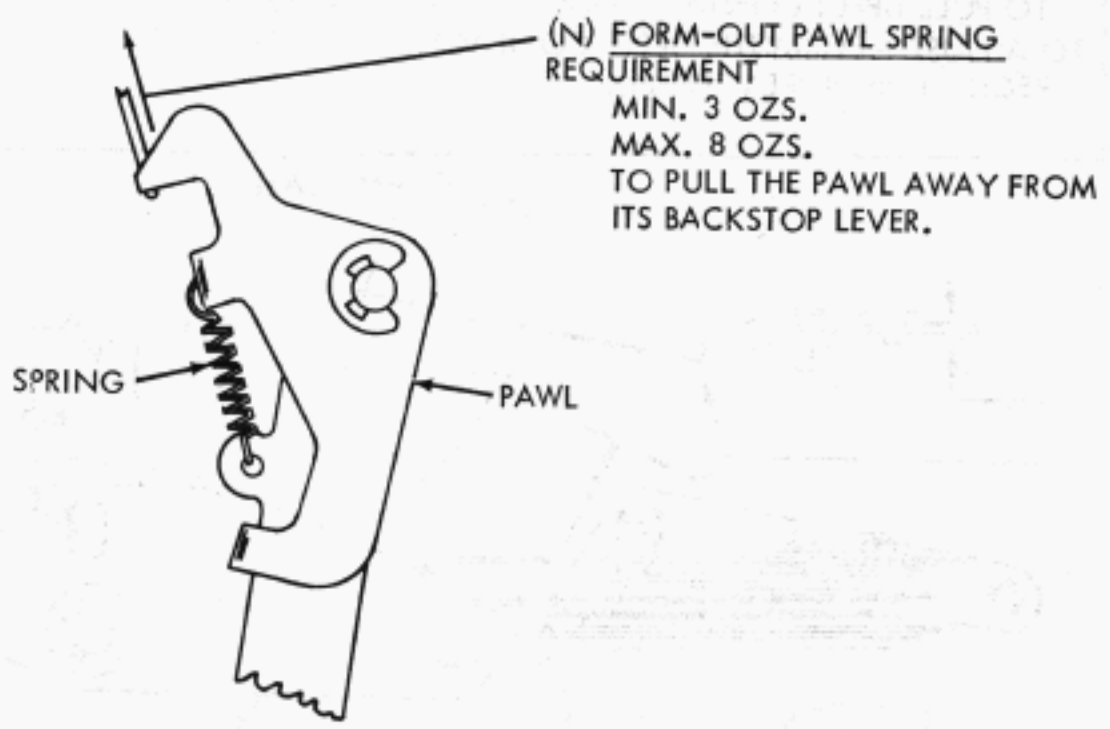

FIGURE 2-52. TYPING UNIT, VERTICAL TABULATION AND TRANSMITTER DISTRIBUTOR CONTROL

21. UNIVERSAL KEYBOARD SWITCH

(A) KEYBOARD UNIVERSAL SWITCH

PRELIMINARY
REQUIREMENT
CENTERLINE OF INSULATED PORTION OF UNIVERSAL SWITCH ASSEMBLY SHOULD ALIGN WITH CENTERLINE OF CODE BAR LEVER.
TO ADJUST
POSITION UNIVERSAL SWITCH ASSEMBLY LATERALLY ON RETAINER BAR WITH ITS MOUNTING SCREW LOOSENED.

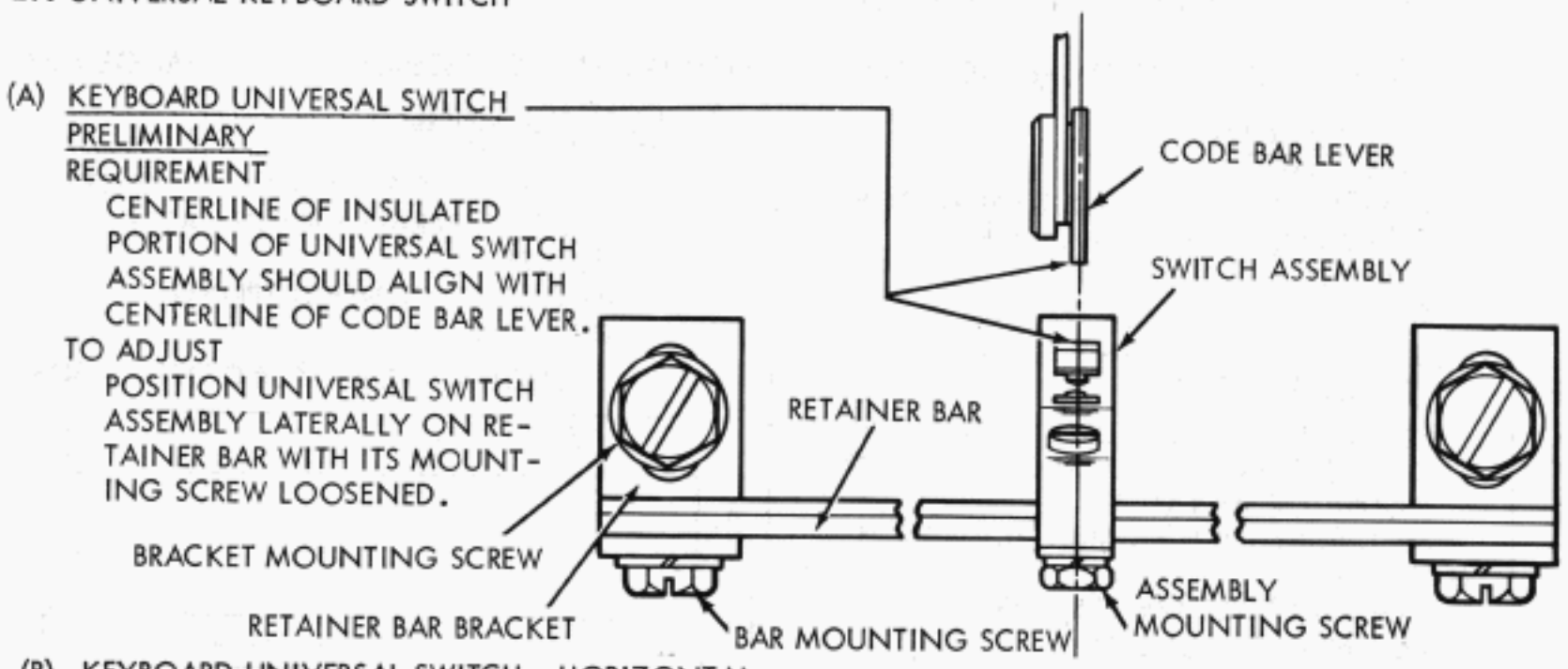

(B) KEYBOARD UNIVERSAL SWITCH - HORIZONTAL

REQUIREMENT
CENTERLINE OF INSULATED PORTION OF UNIVERSAL SWITCH ASSEMBLY SHOULD ALIGN WITH CENTERLINE OF LOWERMOST PORTION OF CODE BAR LEVER.
TO ADJUST
POSITION RETAINER BAR FORWARD OR REARWARD ON ITS BRACKETS WITH ITS MOUNTING SCREWS LOOSENED.

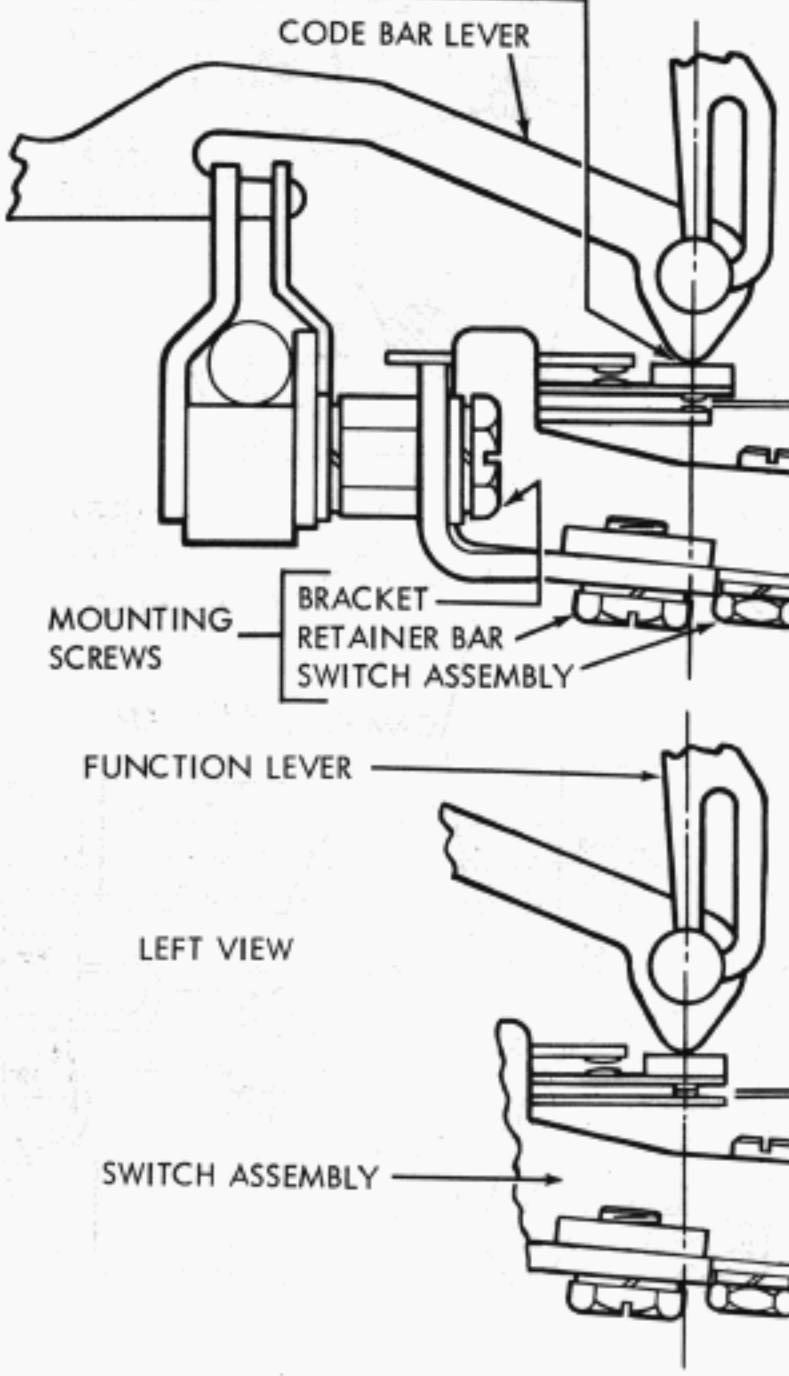

(C) KEYBOARD UNIVERSAL SWITCH - VERTICAL

REQUIREMENT
1. CLEARANCE BETWEEN CENTER AND LOWER CONTACT POINTS SHOULD BE MIN. 0.015 INCH --- MAX. 0.025 INCH
TO CHECK
PULL CONTACT FUNCTION LEVER DOWN AGAINST CODE BAR BASKET AT REAR OF BASKET AND FRONT OF CONTACT LEVER TOUCHING CENTER OF CONTACT INSULATOR
TO ADJUST
BEND UPPER CONTACT SPRING

2. CLEARANCE BETWEEN CENTER AND LOWER CONTACT POINTS SHOULD BE AT LEAST 0.010 INCH
TO CHECK
DEPRESS CONTACT OPERATING KEY WITH 16 OZS. PRESSURE.

3. CENTER AND LOWER CONTACTS SHOULD CLOSE WITH SOME OVER-TRAVEL
TO CHECK
FULLY DEPRESS CONTACT OPERATING KEY
TO ADJUST
POSITION COMPLETE ASSEMBLY WITH RIGHT AND LEFT BRACKET MOUNTING SCREWS LOOSENED.

FIGURE 2-53. - KEYBOARD, UNIVERSAL SWITCH

22. BLINDING CONTACT (PULSING CONTACT)

NOTE: CHECK ADJUSTMENTS (A), (B), (C) BEFORE INSTALLING CONTACT ASSEMBLY ON SIGNAL GENERATOR

(A) CONTACT ALIGNMENT
REQUIREMENT
CONTACT SURFACES SHOULD BE REASONABLY PARALLEL TO EACH OTHER.
TO ADJUST
BEND LARGE CONTACT SPRING

(B) CAM FOLLOWER ARM (UPPER EXTENSION)
REQUIREMENT
CLEARANCE BETWEEN UPPER EXTENSION OF CAM FOLLOWER ARM AND CONTACT SPRING INSULATOR SHOULD BE
MIN. 0.015 INCH --- MAX. 0.025 INCH
TO CHECK
CAM FOLLOWER ARM RESTING AGAINST ITS STOP SCREW
TO ADJUST
POSITION STOP SCREW WITH ITS LOCKNUT LOOSENED

(C) CONTACT SPRING
REQUIREMENT
MIN. 3-1/2 OZS. --- MAX. 4-1/2 OZS. TO JUST SEPARATE THE CONTACTS
TO ADJUST
BEND LARGE CONTACT SPRING. RECHECK (A).

(D) CONTACT GUARD
SEE FIG. 2-55

(E) CONTACT GAP (SEE NOTE 1 ON FIG. 2-55)
REQUIREMENT
CLEARANCE BETWEEN CONTACT POINTS SHOULD BE
MIN. 0.015 INCH --- MAX. 0.025 INCH
TO CHECK
ROTATE MAIN SHAFT TO LATCHED POSITION (CAM FOLLOWER ARM EXTENSION ON HIGH PART OF CAM).
TO ADJUST
POSITION CONTACT ASSEMBLY MOUNTING BRACKET WITH ITS MOUNTING SCREWS LOOSENED.

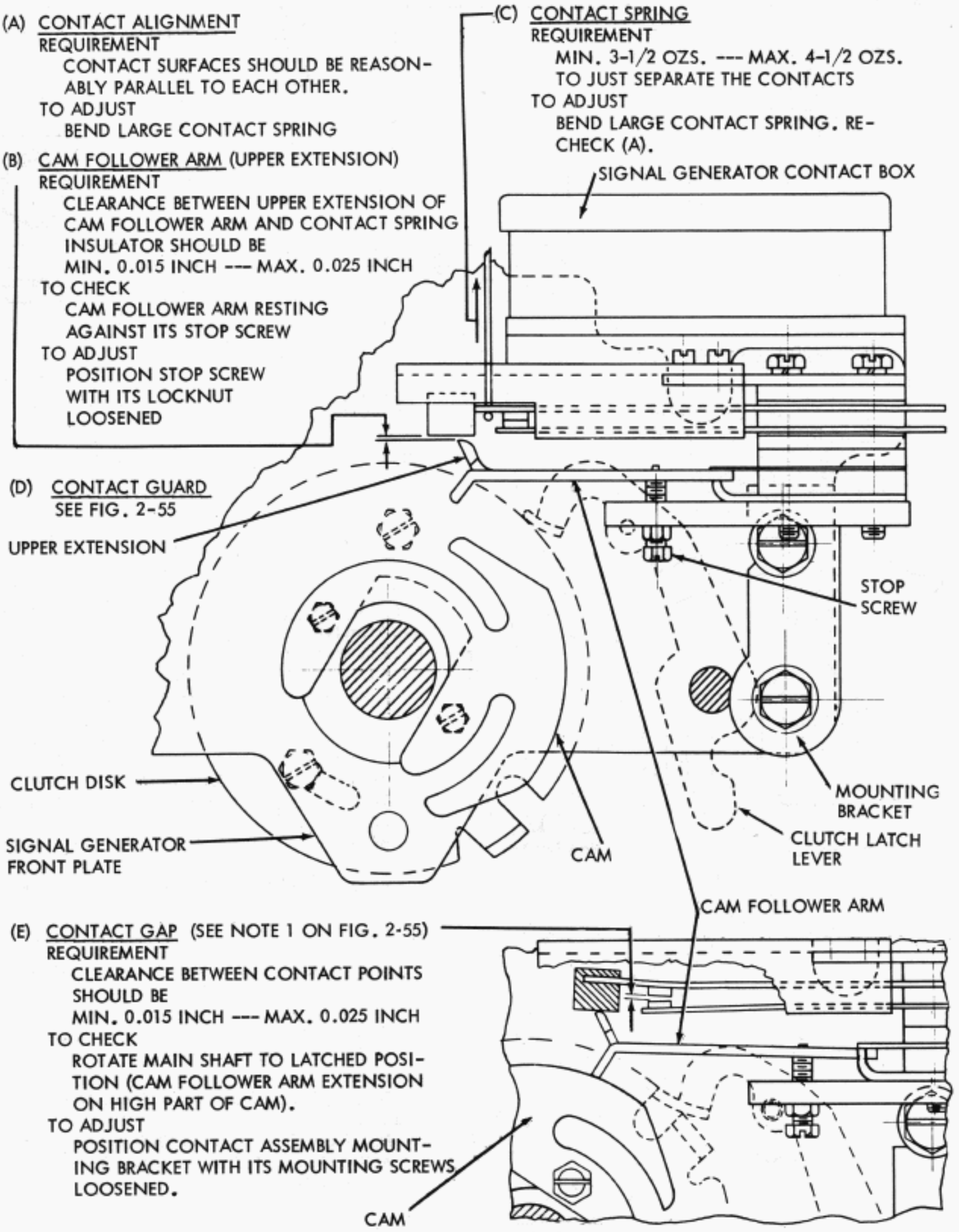

FIGURE 2-54. KEYBOARD, BLINDING CONTACT MECHANISM

22. BLINDING CONTACT (PULSING CONTACT)

NOTE: 1. CHECK ADJUSTMENTS (D), (E), (F) WITH CONTACT ASSEMBLY INSTALLED ON SIGNAL GENERATOR AND BEFORE INSTALLATION OF SIGNAL GENERATOR ON KEYBOARD.
2. THE BLINDING CONTACT IS NOT ADJUSTABLE TO OTHER THAN THE TIMING OF THE STOP PULSE OF THE SIGNAL GENERATOR.

(D) CONTACT GUARD
REQUIREMENT
CLEARANCE BETWEEN CONTACT GUARD AND ROCKER BAIL ASSEMBLY SHOULD BE MIN. 0.010 INCH
TO ADJUST
POSITION CONTACT ASSEMBLY WITH TWO MOUNTING SCREWS LOOSENED. MAINTAIN EQUAL CLEARANCE BETWEEN CONTACT SPRINGS AND CONTACT GUARD.

(E) CONTACT GAP
SEE FIG. 2-54.

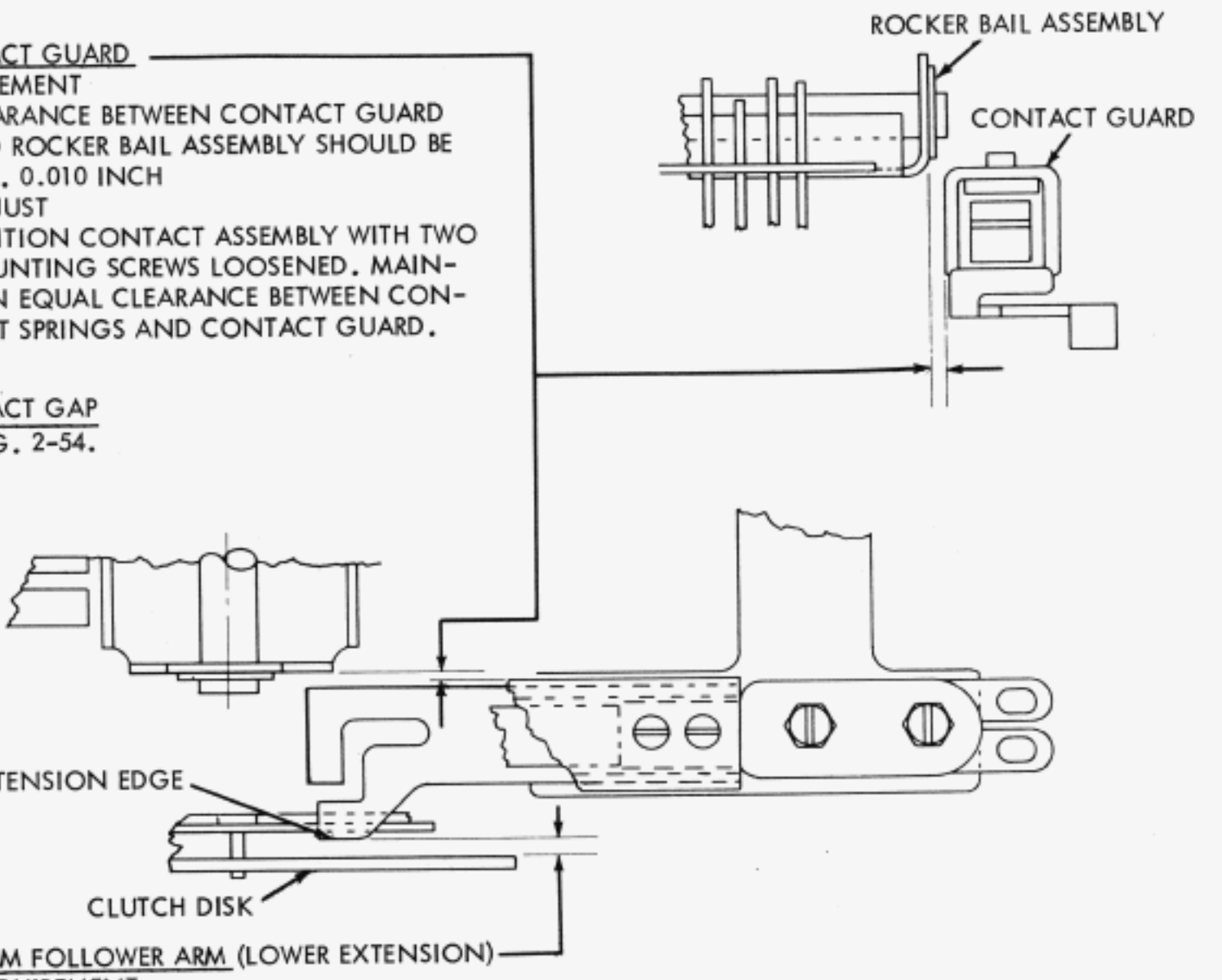

(F) CAM FOLLOWER ARM (LOWER EXTENSION)
REQUIREMENT
CLEARANCE BETWEEN LOWER EXTENSION EDGE OF CAM FOLLLOWER ARM AND INSIDE SURFACE OF CLUTCH DISK SHOULD BE MIN. 0.015 INCH
TO ADJUST
POSITION CAM FOLLOWER HINGE WITH ITS TWO MOUNTING SCREWS LOOSENED.
NOTE --- ROTATE MAIN SHAFT SEVERAL TIMES AND CHECK THE ENTIRE CYCLE. MAKE SURE LOWER EXTENSION OF FOLLOWER ARM DOES NOT COME IN CONTACT WITH ADJUSTING DISK MOUNTING SCREWS.

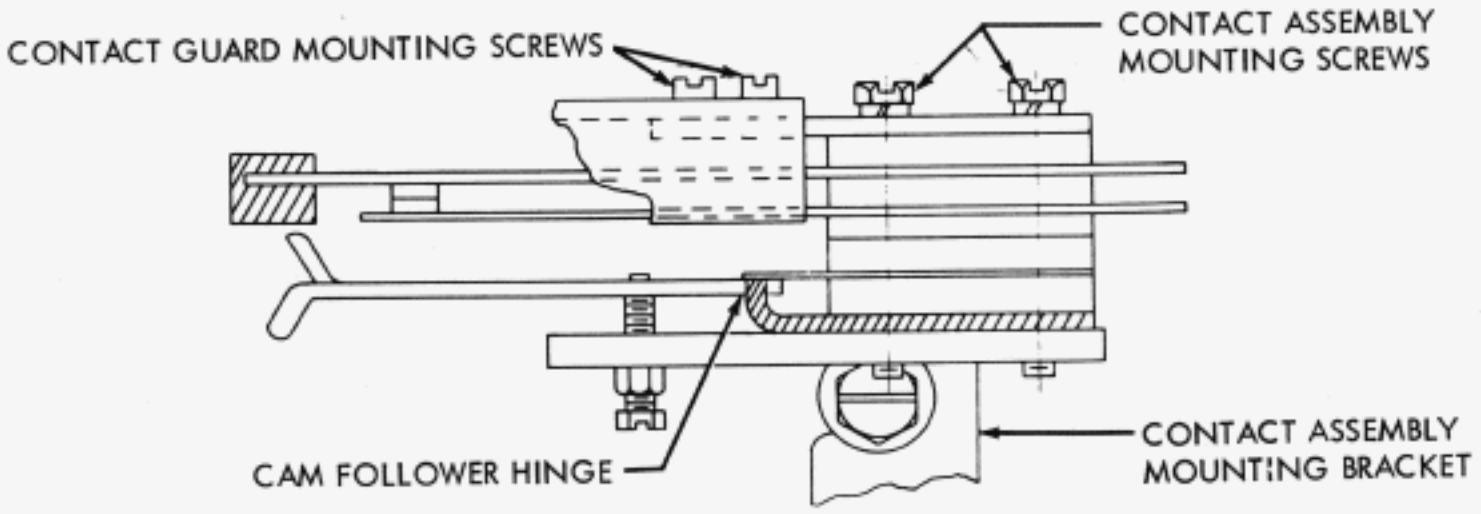

FIGURE 2-55. KEYBOARD, BLINDING CONTACT MECHANISM

22. BLINDING CONTACT (CONT'D FROM FIG 2-35)

(G) SPECIAL REQUIREMENTS (FOLLOWING INSTALLATION OF SIGNAL GENERATOR) PROCEED TO (H) IF A DISTORTION TEST SET IS AVAILABLE

1. CONNECT INDICATOR LAMP ACROSS PULSING CONTACTS. ROTATE MAIN SHAFT UNTIL CLUTCH BECOMES LATCHED.
2. SET UP LETTERS COMBINATION AND ROTATE MAIN SHAFT SLOWLY. THE LAMP SHOULD LIGHT WHEN THE THIRD TRANSFER LEVER BEGINS TO MOVE DOWN ON THE TRANSFER BAIL (START PULSE) AND REMAIN LIT UNTIL JUST BEFORE THE SIXTH TRANSFER LEVER LATCHES UP ON THE TRANSFER BAIL (FIFTH PULSE).
3. REFINE THE ADJUSTMENTS, IF NECESSARY. CHECK THE BLINDING CYCLE WITH THE ASSOCIATED UNIT IN THE CIRCUIT WHILE OPERATING UNDER MOTOR POWER.

(H) STROBE REQUIREMENTS (FOLLOWING INSTALLATION OF SIGNAL GENERATOR) IF A DISTORTION TEST SET IS AVAILABLE.

SET UP "LETTERS" CODE COMBINATION AND ORIENT SCALE OF TEST SET WITH SIGNAL. INTRODUCE THE BLINDING CONTACT INTO THE CIRCUIT (CONTINUE TO TRANSMIT "LETTERS" CODE COMBINATION) AND ADJUST BLINDING CONTACT TO OBTAIN THE FOLLOWING RESULTS:

a. BLINDING CONTACT SHOULD CLOSE BEFORE BEGINNING OF START PULSE AND REMAIN CLOSED TILL AFTER END OF 5TH PULSE.

b. SLIGHT BREAKS (1 OR 2 DIVISIONS) ARE PERMISSIBLE AT EACH END OF BLINDING PULSE. NONE ARE PERMISSIBLE IN THE GENERAL BLINDING SCALE RANGE.

23. LOCK BAR CONTACTS (ELECTRICAL SEND-RECEIVE-BREAK MECHANISM)

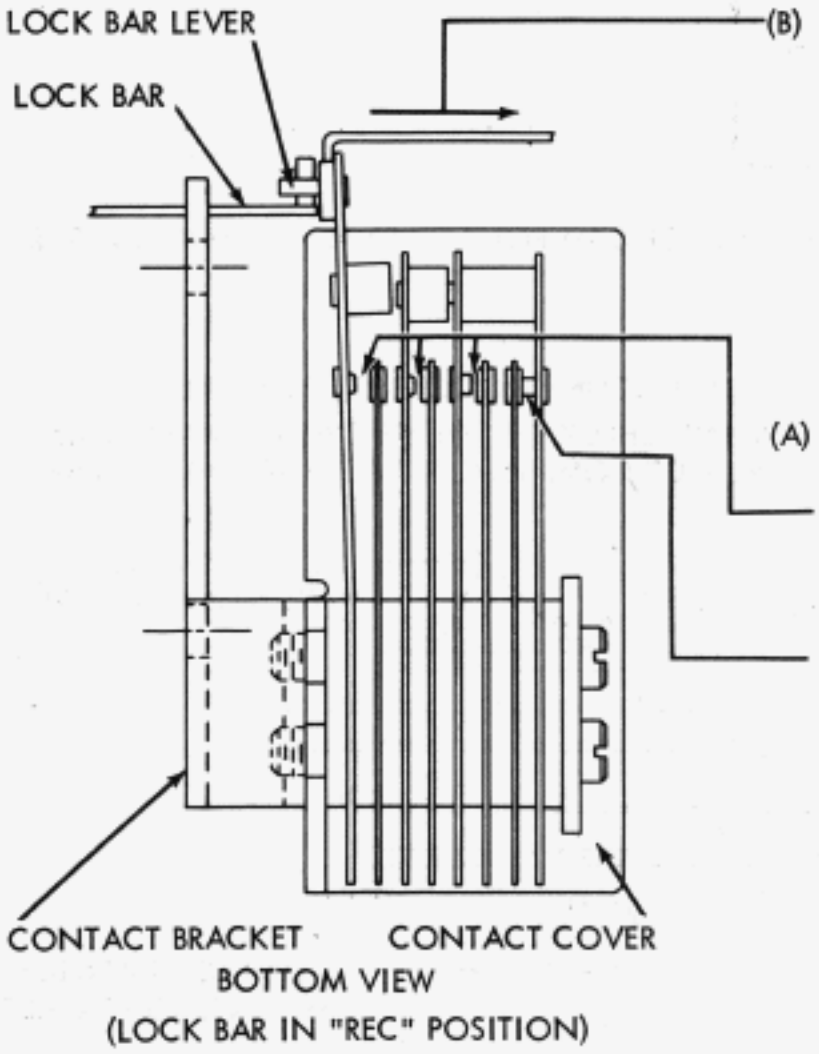

(B) LOCK BAR CONTACT TENSION

REQUIREMENT

MIN. 10 OZS. --- MAX. 15 OZS.
TO START CONTACT SWINGER MOVING

TO CHECK ---

LATCH THE LOCK BAR ("SEND" KEY DEPRESSED AND RELEASED)

TO ADJUST

BEND CONTACT SPRINGS. RECHECK ADJUSTMENT (A)

(A) LOCK BAR CONTACTS

REQUIREMENT

1. GAP BETWEEN NORMALLY OPEN CONTACTS SHOULD BE
   MIN. 0.008 INCH --- MAX. 0.012 INCH
   TO CHECK --- DEPRESS "REC" KEY
2. GAP BETWEEN NORMALLY CLOSED CONTACTS SHOULD BE
   MIN. 0.008 INCH --- MAX. 0.012 INCH
   TO CHECK --- DEPRESS "SEND" KEY AND RELEASE
3. ALL CONTACTS SHOULD CLOSE WITH A SMALL AMOUNT OF OVERTRAVEL

TO ADJUST

BEND CONTACT SPRINGS USING CONTACT BENDING TOOL. AVOID DISTORTING THE CONTACT SPRINGS

FIGURE 2-55. KEYBOARD, LOCK BAR CONTACT MECHANISM

24. ANSWER-BACK MECHANISM (DIAL TWX)
KEYBOARDS LK6 AND UP (BELL 28D AND UP)

NOTE: ADJUSTMENTS ON THIS PAGE SHOULD BE MADE WITH THE ANSWER-BACK MECHANISM REMOVED FROM THE KEYBOARD.

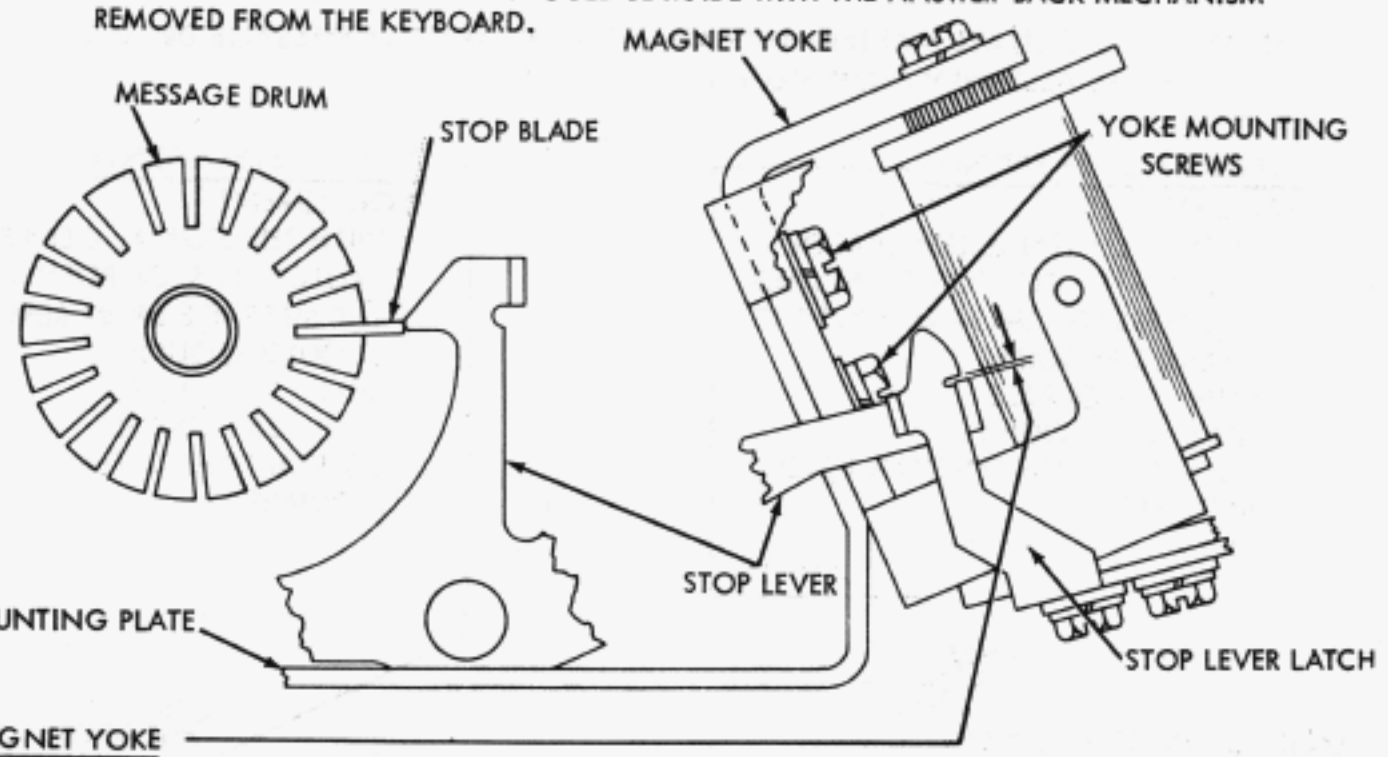

(A) MAGNET YOKE

REQUIREMENT

CLEARANCE BETWEEN LATCHING SURFACES OF STOP LEVER EXTENSION AND STOP LEVER LATCH SHOULD BE
MIN. 0.005 INCH
MAX. 0.015 INCH

TO CHECK

HOLD TIP OF STOP LEVER AGAINST STOP BLADE.

TO ADJUST

POSITION MAGNET YOKE WITH ITS TWO MOUNTING SCREWS LOOSENED.

FOR "HERE-IS" KEYLEVER SWITCH REQUIREMENTS SEE UNIVERSAL KEYBOARD SWITCH ADJUSTMENTS, PAGE 2-51. FOR PULSING CONTACT REQUIREMENTS SEE BLINDING CONTACT ADJUSTMENTS, PAGE 2-52 THROUGH 2-54.

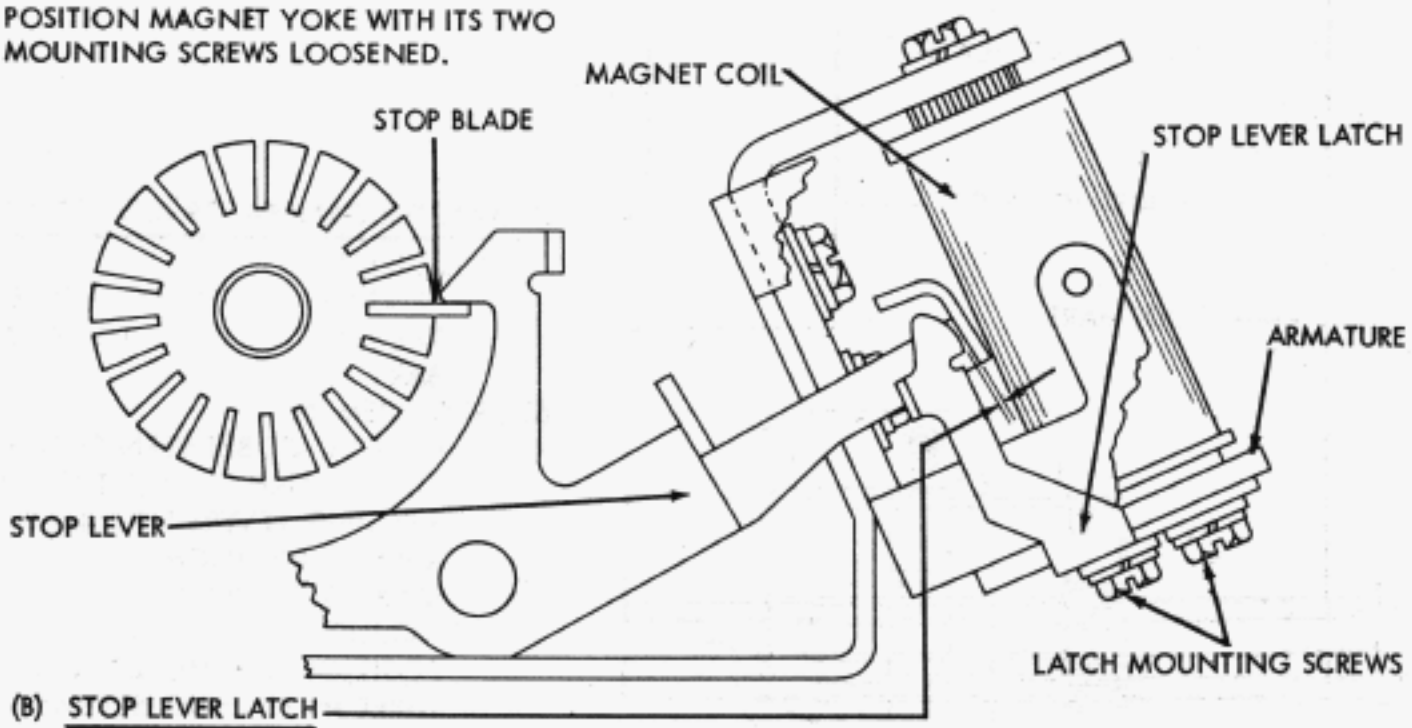

(B) STOP LEVER LATCH

(1) REQUIREMENT

CLEARANCE BETWEEN STOP LEVER AND STOP LEVER LATCH SHOULD BE
MIN. 0.002 INCH
MAX. 0.007 INCH

TO CHECK

HOLD ARMATURE AGAINST THE MAGNET CORE AND THE STOP LEVER IN ITS MAXIMUM COUNTER-CLOCKWISE POSITION.

(2) REQUIREMENT

CLEARANCE BETWEEN STOP LEVER AND STOP LEVER LATCH THROUGHOUT A COMPLETE TRAVEL OF THE STOP LEVER
MIN. 0.002 INCH

TO CHECK

HOLD ARMATURE AGAINST MAGNET CORE.

TO ADJUST

POSITION STOP LEVER LATCH WITH ITS TWO MOUNTING SCREWS LOOSENED

FIGURE 2-57. KEYBOARD, ANSWER BACK MECHANISM ("FIGS" "C")

24. ANSWER-BACK MECHANISM (DIAL TWX)
KEYBOARDS LK6 AND UP (BELL 28D AND UP)

NOTE: TO FACILITATE MAKING THIS ADJUSTMENT, REMOVE MESSAGE DRUM AND DRIVE PLATE ASSEMBLY FROM MECHANISM.

(B) SENSING LEVER SPRINGS

REQUIREMENT

WITH THE SIGNAL GENERATOR CLUTCH IN STOP POSITION AND THE MESSAGE DRUM REMOVED IT SHOULD REQUIRE
MIN. 1/4 OUNCE
MAX. 1-1/4 OUNCES
TO START EACH SENSING LEVER MOVING.

(C) DETENT LEVER SPRING

REQUIREMENT

WITH THE SIGNAL GENERATOR CLUTCH IN STOP POSITION AND THE MESSAGE DRUM REMOVED, IT SHOULD REQUIRE
MIN. 22 OUNCES
MAX. 26 OUNCES
TO START THE DETENT LEVER MOVING.

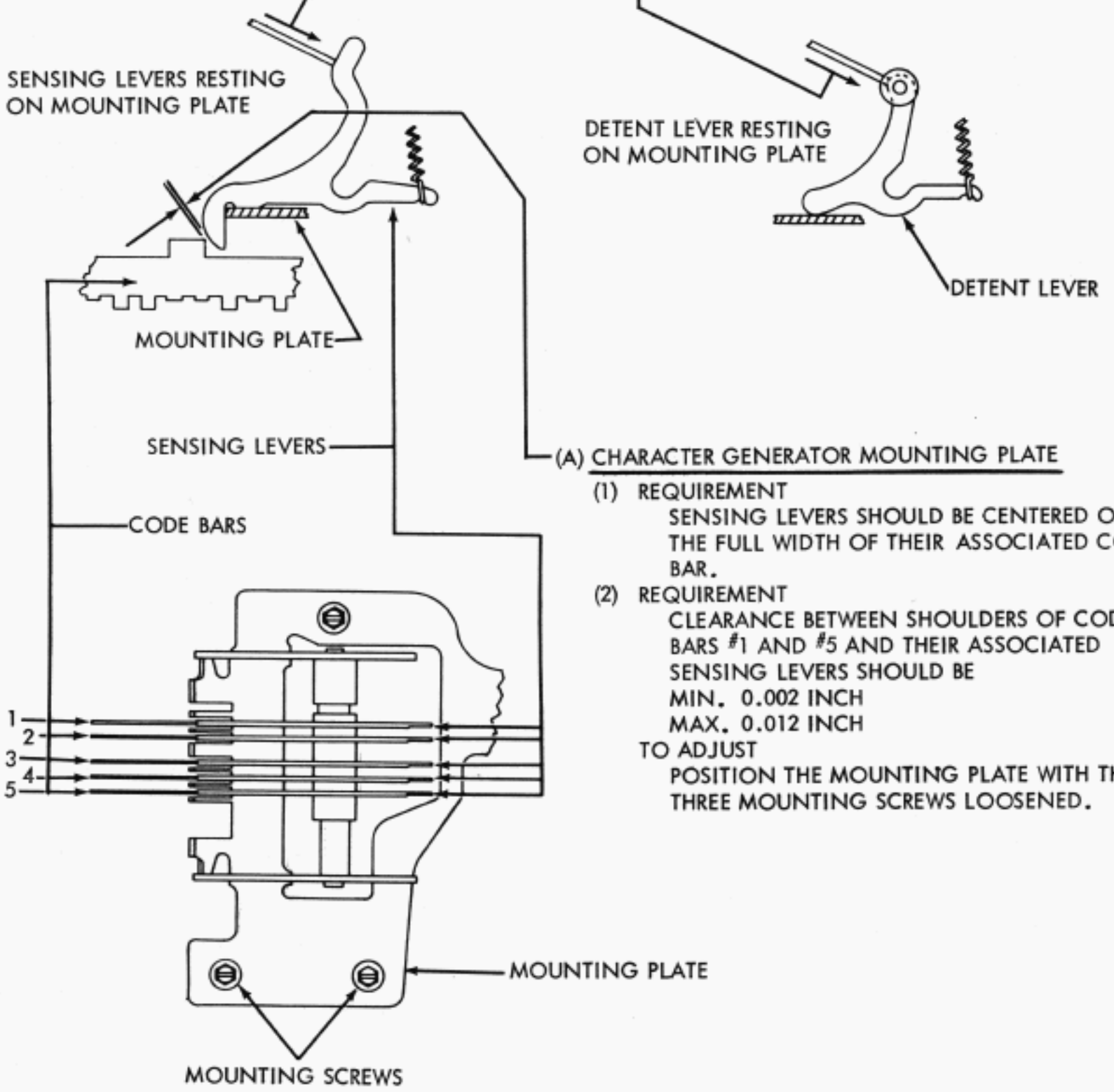

(A) CHARACTER GENERATOR MOUNTING PLATE

(1) REQUIREMENT

SENSING LEVERS SHOULD BE CENTERED ON THE FULL WIDTH OF THEIR ASSOCIATED CODE BAR.

(2) REQUIREMENT

CLEARANCE BETWEEN SHOULDERS OF CODE BARS #1 AND #5 AND THEIR ASSOCIATED SENSING LEVERS SHOULD BE
MIN. 0.002 INCH
MAX. 0.012 INCH

TO ADJUST

POSITION THE MOUNTING PLATE WITH THE THREE MOUNTING SCREWS LOOSENED.

FIGURE 2-58. KEYBOARD, ANSWER BACK MECHANISM ("FIGS" "C")

24. ANSWER-BACK MECHANISM (DIAL TWX)
KEYBOARDS LK6 AND UP (BELL 28D AND UP)

PERFORM THIS ADJUSTMENT BEFORE FINAL INSTALLATION OF MESSAGE DRUM AND DRIVE PLATE ASSEMBLY.

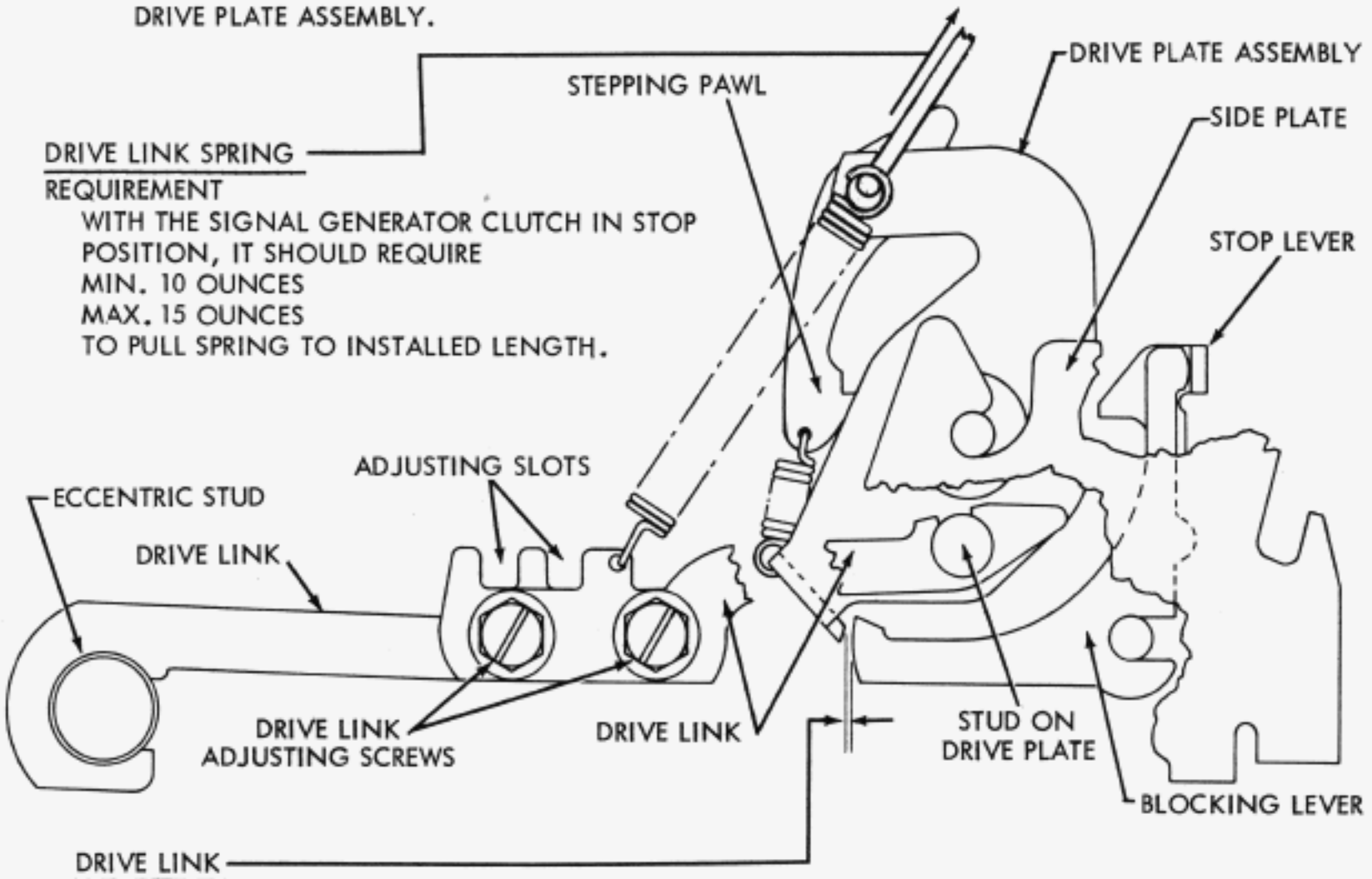

DRIVE LINK SPRING

REQUIREMENT

WITH THE SIGNAL GENERATOR CLUTCH IN STOP POSITION, IT SHOULD REQUIRE
MIN. 10 OUNCES
MAX. 15 OUNCES
TO PULL SPRING TO INSTALLED LENGTH.

DRIVE LINK

REQUIREMENT

CLEARANCE BETWEEN DRIVE PLATE EXTENSION AND BLOCKING LEVER SHOULD BE
MIN. 0.002 INCH
MAX. 0.007 INCH

TO CHECK

SIGNAL GENERATOR CAM ECCENTRIC AND ARM HOLDING CODE BAR BAIL IN EXTREME RESET POSITION TO THE LEFT.

TO ADJUST

LOOSEN THE TWO ADJUSTING SCREWS AND POSITION THE TWO DRIVE LINKS BY MEANS OF THE ADJUSTING SLOTS.

NOTE THE STANDARD KEYBOARD ADJUSTMENTS LISTED BELOW SHOULD BE CHECKED DURING INSTALLATION OF THE ANSWER-BACK MECHANISM.

A. CODE BAR AND CODE LEVER CLEARANCE, FIGURE 1-5.
B. CODE BAR BAIL - FIGURE 1-7. REFINE THIS ADJUSTMENT TO .004 TO .006 INCH.
C. CODE BAR BAIL AND NON-REPEAT LEVER CLEARANCE, FIGURE 1-7.
D. UNIVERSAL BAIL LATCH LEVER, FIGURE 1-8.
E. UNIVERSAL BAIL EXTENSION, FIGURE 1-8.

FIGURE 2-59. KEYBOARD, ANSWER BACK MECHANISM ("FIGS" "C")

24. ANSWER-BACK MECHANISM (DIAL TWX)
KEYBOARDS LK6 AND UP (BELL 28D AND UP)

THE FOLLOWING FINAL ADJUSTMENTS FOR THE ANSWER-BACK MECHANISM SHOULD BE MADE AFTER INSTALLATION OF THE MECHANISM ON THE KEYBOARD.

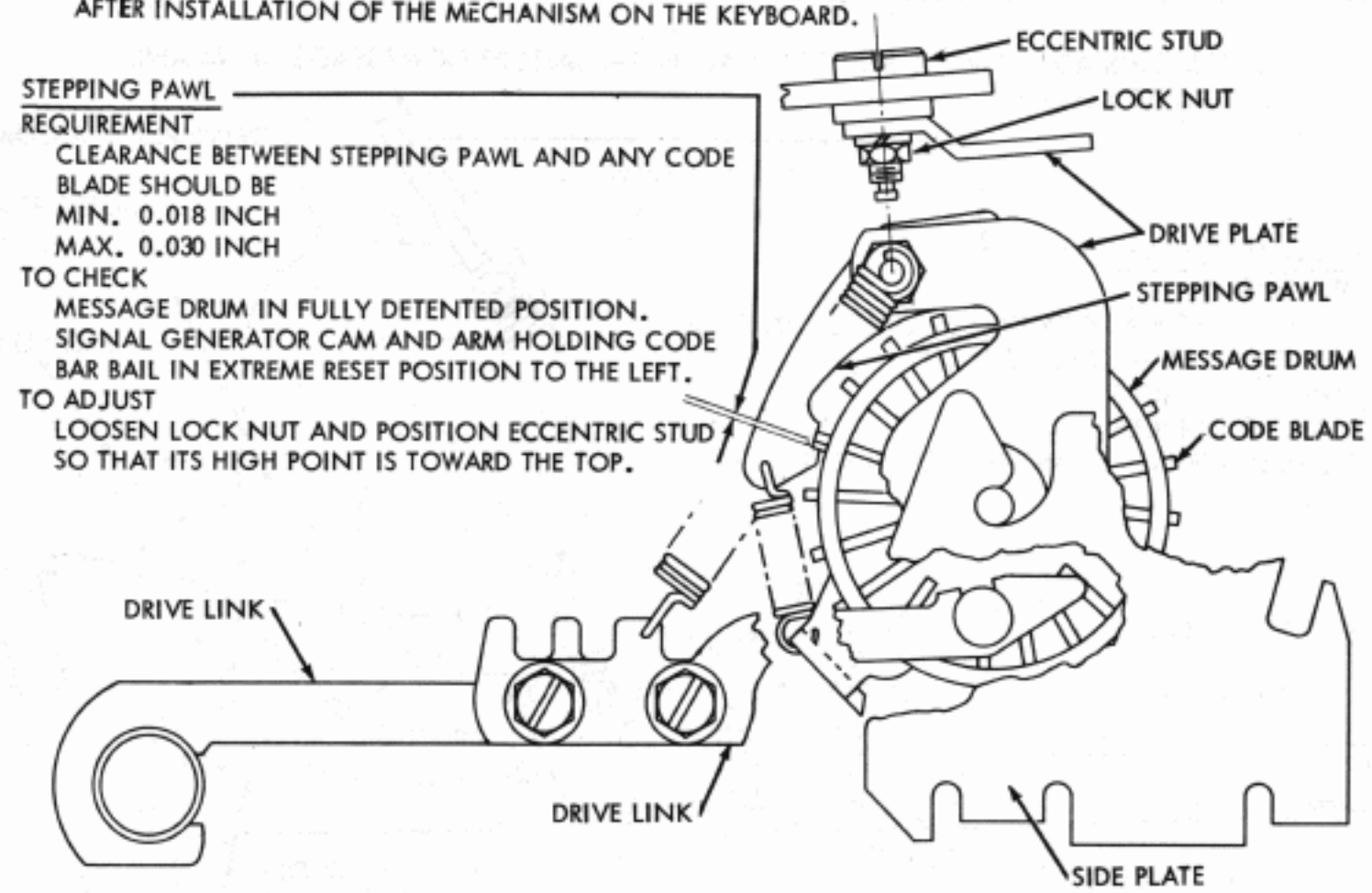

STEPPING PAWL
REQUIREMENT
CLEARANCE BETWEEN STEPPING PAWL AND ANY CODE BLADE SHOULD BE
MIN. 0.018 INCH
MAX. 0.030 INCH
TO CHECK
MESSAGE DRUM IN FULLY DETENTED POSITION.
SIGNAL GENERATOR CAM AND ARM HOLDING CODE BAR BAIL IN EXTREME RESET POSITION TO THE LEFT.
TO ADJUST
LOOSEN LOCK NUT AND POSITION ECCENTRIC STUD SO THAT ITS HIGH POINT IS TOWARD THE TOP.

STEPPING PAWL SPRING
REQUIREMENT
WITH SIGNAL GENERATOR CLUTCH IN STOP POSITION.
MIN. 2-1/2 OUNCES
MAX. 3-1/2 OUNCES
TO START PAWL MOVING.

LATCH OPERATING LEVER SPRING
REQUIREMENT
WITH SIGNAL GENERATOR CLUTCH IN STOP POSITION
MIN. 5 OUNCES
MAX. 6 OUNCES
TO START LEVER MOVING.

LATCH OPERATING LEVER ADJUSTING SCREW
REQUIREMENT
CLEARANCE BETWEEN EXTENSION ON LATCH OPERATING LEVER AND CODE BAR BAIL LATCH SHOULD BE
MIN. 0.005 INCH
MAX. 0.015 INCH
TO CHECK
SIGNAL GENERATOR CLUTCH FULLY DISENGAGED. STOP LEVER LATCHED ON MAGNET ARMATURE LATCH.
TO ADJUST
WITH LOCK NUT LOOSENED POSITION LATCH OPERATING ADJUSTING SCREW.

FIGURE 2-60. KEYBOARD, ANSWER BACK MECHANISM ("FIGS" "C")

24. ANSWER-BACK MECHANISM (DIAL TWX)
KEYBOARDS LK6 AND UP (BELL 28D AND UP)

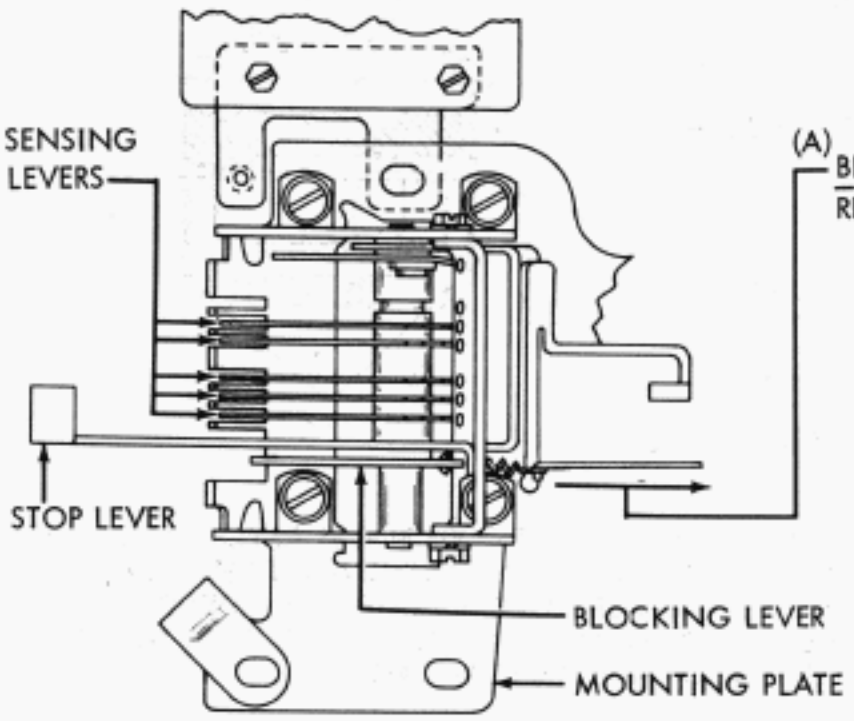

(A) BLOCKING LEVER SPRING

REQUIREMENT

WITH SIGNAL GENERATOR CLUTCH IN STOP POSITION, UNHOOK BLOCKING LEVER SPRING FROM STOP LEVER.
MIN. 1 OUNCE
MAX. 2 OUNCES
TO PULL SPRING TO INSTALLED LENGTH

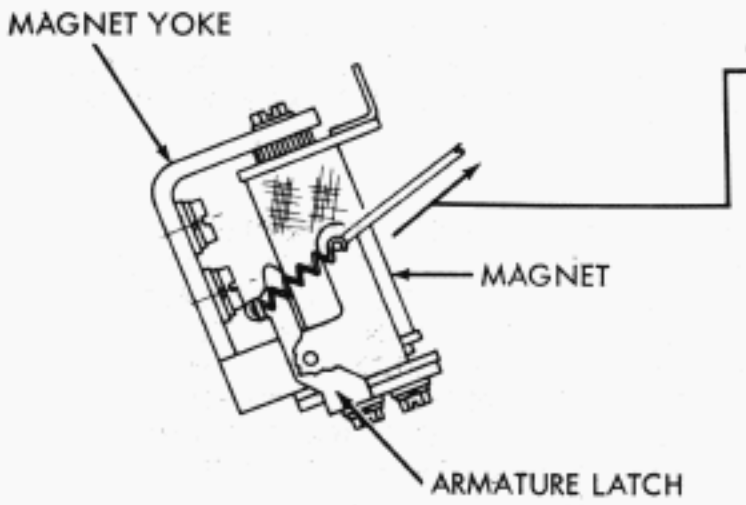

(B) ARMATURE LATCH SPRING

REQUIREMENT

WITH SIGNAL GENERATOR CLUTCH IN STOP POSITION, UNHOOK ARMATURE LATCH SPRING FROM SPRING POST ON MAGNET YOKE.
MIN. 2 OUNCES
MAX. 4 OUNCES
TO PULL SPRING TO INSTALLED LENGTH.

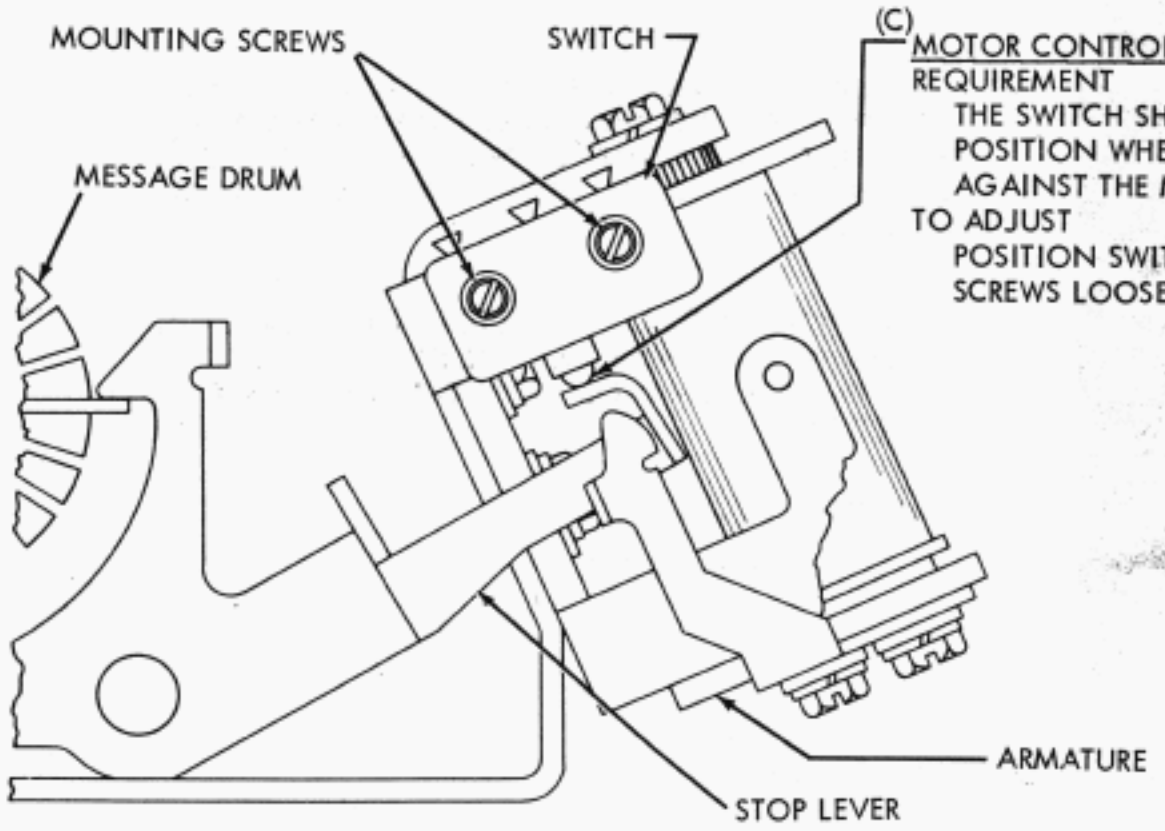

(C) MOTOR CONTROL RELAY SWITCH

REQUIREMENT

THE SWITCH SHOULD BE IN ITS OPERATED POSITION WHEN THE ARMATURE IS HELD AGAINST THE MAGNET CORE.

TO ADJUST

POSITION SWITCH WITH ITS MOUNTING SCREWS LOOSENED.

FIGURE 2-61. KEYBOARD, ANSWER BACK MECHANISM ("FIGS" "C")

24. ANSWER-BACK MECHANISM

CODING THE MESSAGE DRUM

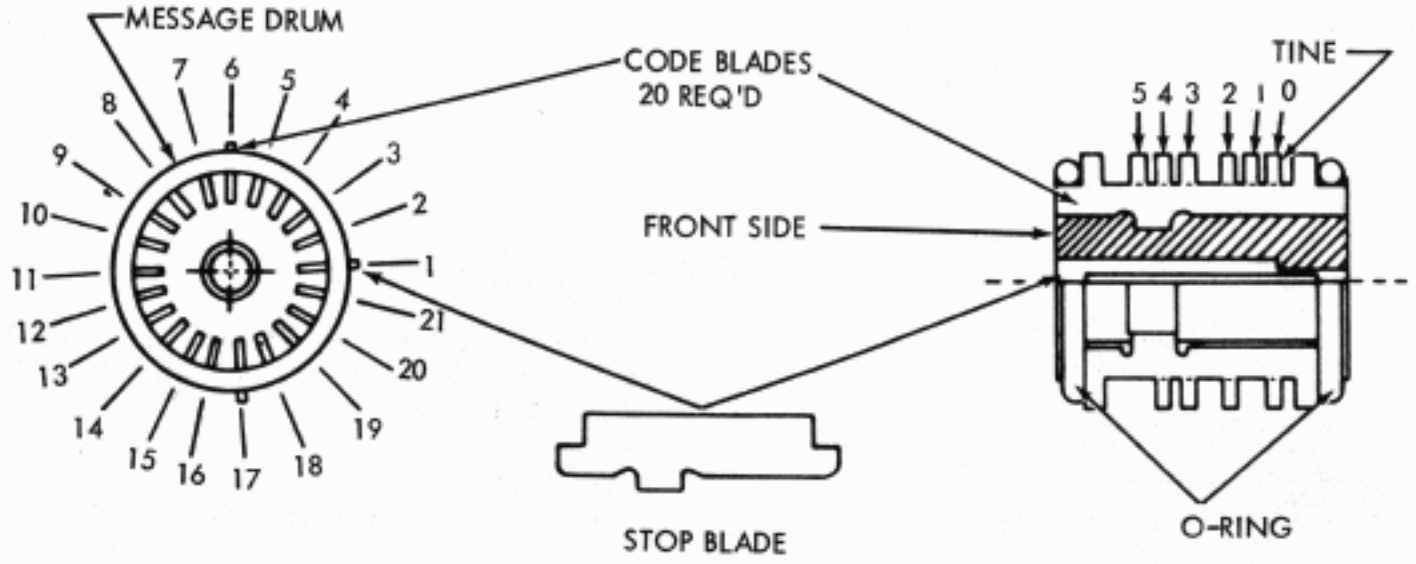

1. REMOVE MESSAGE DRUM FROM ANSWER BACK ASSEMBLY AND TAKE OUT CODE BLADES AS FOLLOWS: REMOVE DRIVE LINK SPRING ALLOWING DRIVE LINK TO DROP OUT OF ENGAGEMENT WITH STUD ON DRIVE PLATE. LIFT MESSAGE DRUM FROM NOTCHES. DEPRESS STEPPING PAWL EXTENSION AND PULL DRUM OFF SHAFT. REMOVE "O" RING FROM ONE END OF DRUM AND TAKE OUT TWENTY CODE BLADES. IT IS NOT NECESSARY TO TAKE OUT STOP BLADE. (REFER TO PARTS BULLETIN 1149B).

2. CODE A BLADE BY BREAKING OFF UNWANTED TINES AT SCORED LINE AT BASE OF EACH TINE. THE FIGURE BELOW INDICATES TINES TO BE REMOVED FOR A PARTICULAR CHARACTER. HOLD EACH BLADE SECURELY NEAR SCORE MARK OF TINE TO BE REMOVED. IN STANDARD 5 LEVEL OPERATION, THE O CODE LEVEL TINE IS DISREGARDED.

LETTERS	TYPICAL FIG. ARRGT.	CODE 1	2	3	4	5
A	—	■		□	□	□
B	?	■	□	□	■	■
C	:	□	■	■	■	□
D	$	■	□	□	■	□
E	3	■	□	□	□	□
F	!	■	□	■	■	□
G	&	□	■	□	■	■
H	#	□	□	■	□	■
I	8	□	■	■	□	□
J	'	■	■	□	□	□
K	(	■	■	■	■	□
L	)	□	■	□	□	■
M	.	□	□	■	■	■
N	,	□	□	■	■	□
O	9	□	□	□	■	■
P	0	□	■	■	□	■
Q	1	■	■	■	□	■
R	4	□	■	□	■	□
S	BELL	■	□	■	□	□
T	5	□	□	□	□	■
U	7	■	■	■	□	□
V	;	□	■	■	■	■
W	2	■	■	□	□	■
X	/	■	□	□	■	■
Y	6	■	□	□	□	■
Z	"	■	□	□	□	□
CARRIAGE RETURN		□	□	□	■	□
LINE FEED		□	■	□	□	□
LETTERS SHIFT		■	■	■	■	■
FIGURES SHIFT		■	■	□	■	■
SPACE		□	□	■	□	□
BLANK		□	□	□	□	□

3. CODE THE DRUM IN A COUNTER-CLOCKWISE DIRECTION STARTING WITH NO. 2 CODE BLADE (ADJACENT TO STOP BLADE). BEGIN MESSAGE WITH "LETTERS" (STOP BLADE) FOLLOWED BY "CARRIAGE RETURN" AND "LINE FEED". END MESSAGE WITH "CARRIAGE RETURN" AND "LINE FEED". THIS LEAVES 16 CHARACTERS AVAILABLE FOR MESSAGE PROPER. CODE ANY UNUSED CHARACTERS WITH "LETTERS" OR "BLANKS", SINCE EACH SLOT POSITION IN DRUM MUST BE OCCUPIED BY A CODE BLADE.

4. INSTALL CODED BLADES IN PROPER SLOTS IN DRUM - INSERT END OF BLADE UNDER REMAINING "O" RING AND ROTATE THE BLADE TOWARD CENTER OF DRUM UNTIL IT IS FULLY SEATED. WHEN ALL THE SLOTS ARE FILLED REPLACE "O" RING REMOVED IN 1. ABOVE

5. APPLY GREASE TO SHAFT OF MESSAGE DRUM. REASSEMBLE MECHANISM REVERSING PROCEDURE OF STEP 1. BE SURE PARTS ARE PROPERLY SEATED. LUBRICATE PER INSTRUCTION IN SECTION 3.

■ — LEAVE TINE

□ — REMOVE TINE

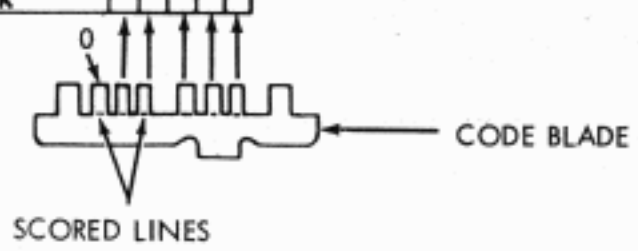

FIGURE 2-62. KEYBOARD, ANSWER BACK MECHANISM ("FIGS" "C")

24. ANSWER-BACK MECHANISM (DIAL TWX)

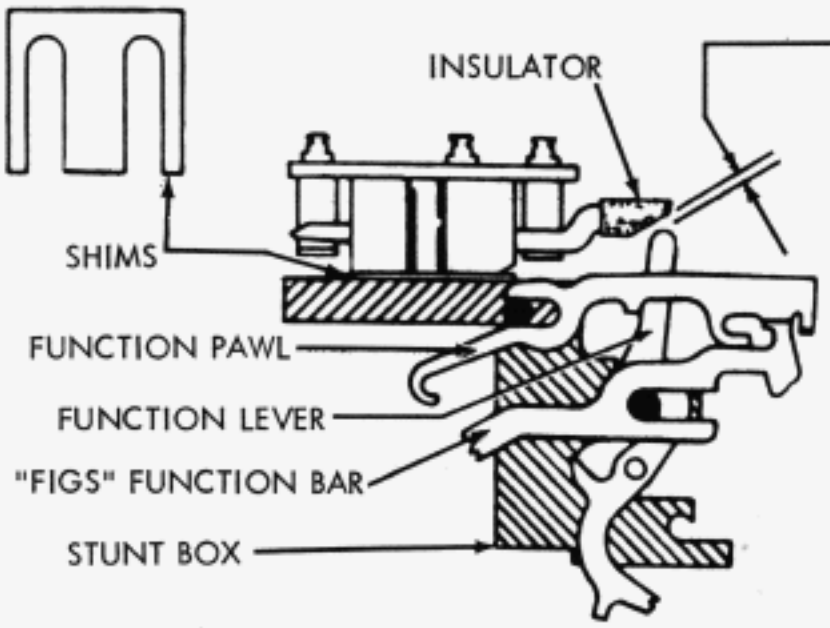

"FIGURES" STUNT BOX CONTACT
(STUNT BOX SLOT 32)
REQUIREMENT
CLEARANCE BETWEEN CONTACT INSULATOR AND FUNCTION LEVER SHOULD BE
MIN. SOME --- MAX. 0.008 INCH
TO CHECK
STUNT BOX MOUNTED ON TYPING UNIT AND "LETTERS" COMBINATION MANUALLY SET UP ON TYPING UNIT SELECTOR. ROTATE TYPING UNIT MAIN SHAFT UNTIL FUNCTION LEVER IS IN EXTREME FORWARD POSITION TOWARD CONTACT INSULATOR.
TO ADJUST
WITH CONTACT MOUNTING SCREWS LOOSENED, ADD OR REMOVE SHIMS AS REQUIRED.

FIGURE 2-63. TYPING UNIT, ANSWER BACK MECHANISM ("FIGS" "C")

25. ANSWER-BACK MECHANISM ("FIGS" "D")
KEYBOARDS LK6 AND UP

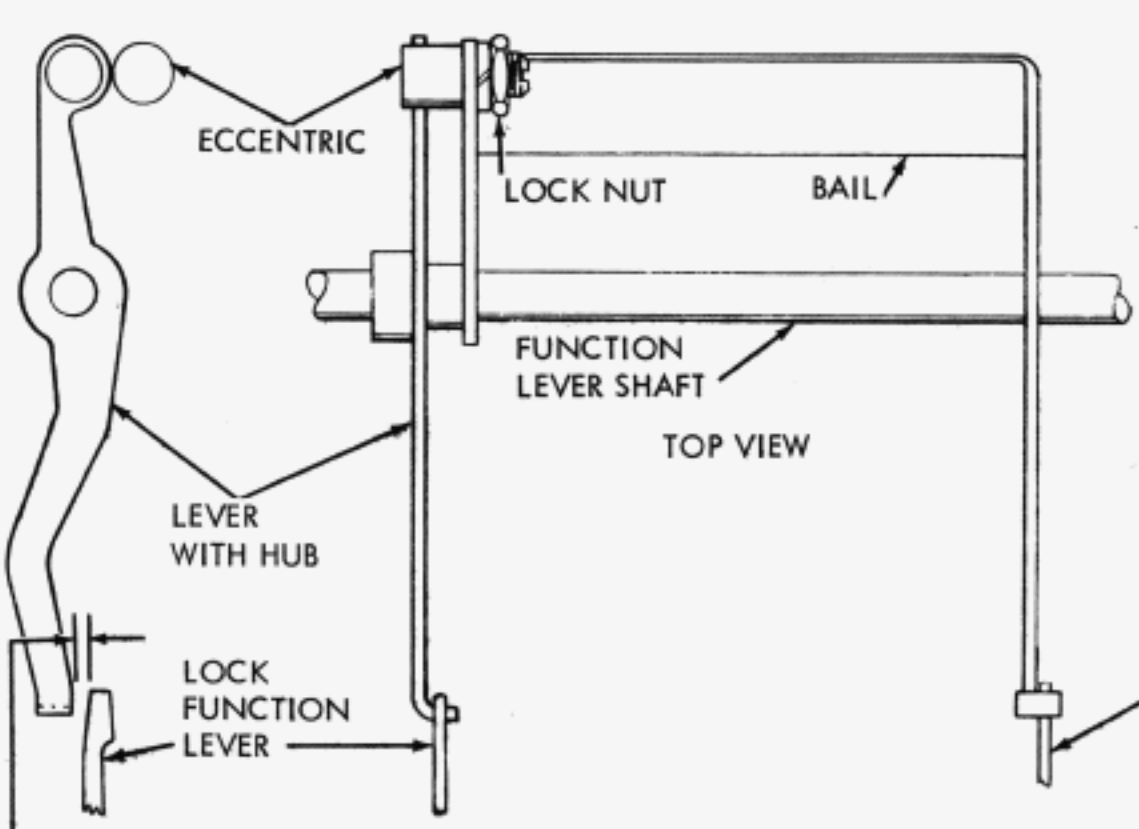

NOTE

ADJUSTMENT REQUIREMENTS FOR "FIGS" "D" ANSWER-BACK OPERATION ARE IDENTICAL TO REQUIREMENTS FOR "FIGS" "C" OPERATION (SEE PAGE 2-55 THROUGH 2-61)EXCEPT FOR THE ADDITIONAL ADJUSTMENT GIVEN BELOW.

KEYBOARD LOCK BAIL ECCENTRIC
REQUIREMENT
CLEARANCE BETWEEN KEYBOARD LOCK LEVER W/HUB AND KEYBOARD LOCK FUNCTION LEVER SHOULD BE
MIN. SOME --- MAX. 0.006 INCH
TO CHECK
FULLY DEPRESS BOTH "KYBD LOCK" AND "HERE IS" KEYS (HOLD LIGHTLY).
TO ADJUST
LOOSEN LOCK NUT AND POSITION ECCENTRIC WITH ITS HIGH POINT TOWARD FRONT OF KEYBOARD.

FIGURE 2-64. KEYBOARD, ANSWER BACK MECHANISM ("FIGS" "D")

26. ANSWER-BACK MECHANISM (DIAL TWX)
FOR KEYBOARDS LK3, LK4 AND LK5 (BELL 28A AND 28C)

"HERE-IS" KEYLEVER ADJUSTMENTS

(A) KEYBOARD UNIVERSAL SWITCH - (PRELIMINARY)
SEE FIG. 2-53 (A)

(B) KEYBOARD UNIVERSAL SWITCH - (HORIZONTAL)
SEE FIG. 2-53 (B)

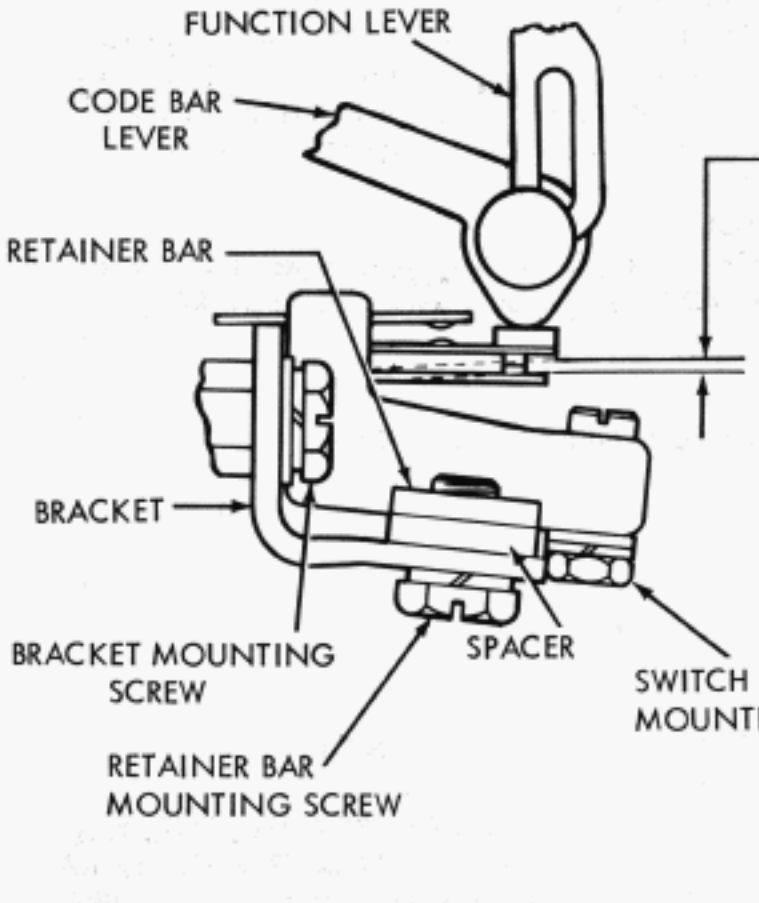

(C) KEYBOARD UNIVERSAL SWITCH - VERTICAL
REQUIREMENT
CENTER AND LOWER CONTACTS SHOULD CLOSE WITH
MIN. SOME
MAX. 0.005 INCH
OF OVER-TRAVEL
TO ADJUST
POSITION RETAINER BAR ASSEMBLY WITH BRACKET MOUNTING SCREWS LOOSENED.

NOTE: KEEP CONTACTS FREE OF OIL AND GREASE

FIGURE 2-65. KEYBOARD, ANSWER-BACK MECHANISM ("FIGS" "C")

26. ANSWER-BACK MECHANISM (DIAL TWX)
FOR KEYBOARDS LK3, LK4 AND LK5 (BELL 28A AND 28C)

PERFORM ADJUSTMENTS ON THIS PAGE DURING INSTALLATION OF PULSING CONTACT ASSEMBLY.

NOTE: KEEP CONTACTS FREE OF GREASE AND OIL.

(C) STOP SCREW
REQUIREMENT
CLEARANCE BETWEEN FINGER AND SWINGER INSULATOR SHOULD BE
MIN. 0.010 INCH --- MAX. 0.020 INCH
TO CHECK
TRIP CLUTCH AND ROTATE MAIN SHAFT UNTIL FINGER EXTENSION DROPS OFF OF CAM.
TO ADJUST
POSITION STOP SCREW WITH LOCK NUT LOOSENED.

(B) SWINGER CONTACT LEAF
REQUIREMENT
WITH CONTACTS CLOSED
MIN. 3-1/2 OZS.
MAX. 4-1/2 OZS.
TO JUST SEPARATE THE CONTACTS
TO ADJUST
BEND SWINGER CONTACT LEAF. RECHECK (A).

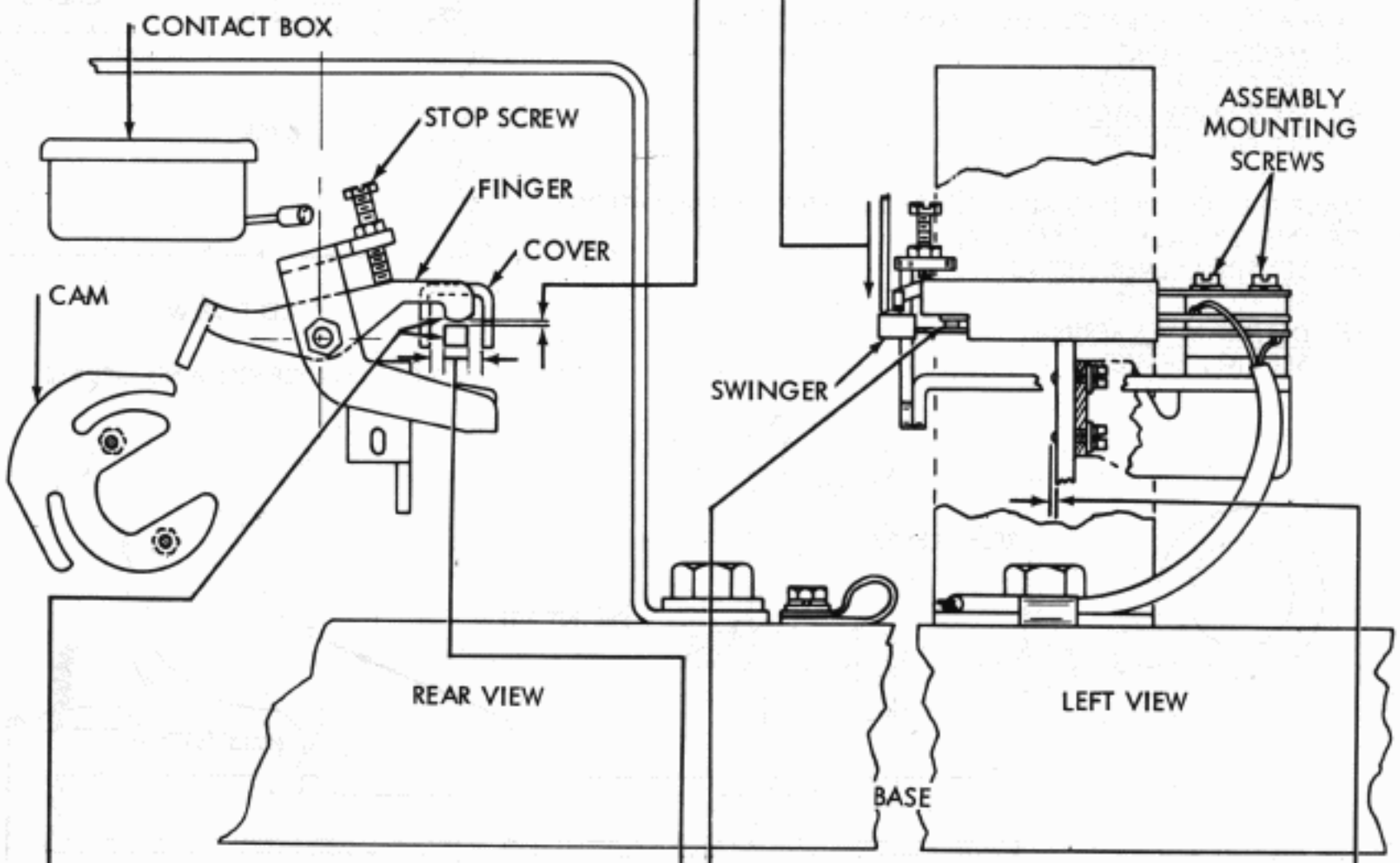

(A) CONTACT ASSEMBLY
REQUIREMENT
1. CLEARANCE BETWEEN CONTACT SWINGER INSULATOR AND SIDES OF CONTACT COVER SHOULD BE EQUAL WITHIN 0.015 INCH. GAGE BY EYE.
2. SWINGER AND SWINGER OPERATING FINGER SHOULD ALIGN WITHIN 0.015 INCH GAGE BY EYE
3. CONTACTS ON CONTACT ASSEMBLY SHOULD ALIGN WITHIN 0.015 INCH
TO ADJUST
POSITION THE CONTACT ASSEMBLY PILE-UP WITH TWO MOUNTING SCREWS LOOSENED.

(D) CONTACT ASSEMBLY BRACKET MOUNTING SCREWS
REQUIREMENT
BRACKET MOUNTING SCREWS SHOULD NOT PROTRUDE MORE THAN 0.031 INCH BEYOND REAR SURFACE OF MOUNTING PLATE.
TO ADJUST
ADD FLAT WASHERS AS NECESSARY.

FIGURE 2-66. KEYBOARD, ANSWER-BACK MECHANISM ("FIGS" "C")

26. ANSWER-BACK MECHANISM (DIAL TWX)
FOR KEYBOARDS LK3, LK4 AND LK5 (BELL 28A AND 28C)

(A) PULSING CONTACTS
REQUIREMENT
(PERFORM THIS ADJUSTMENT DURING INSTALLATION OF CONTACTS)
CLEARANCE BETWEEN CONTACT POINTS SHOULD BE
MIN. 0.015 INCH
MAX. 0.025 INCH
TO CHECK
TRIP CLUTCH AND ROTATE MAIN SHAFT UNTIL FINGER EXTENSION IS ON PEAK OF CAM.
TO ADJUST
POSITION THE CONTACT ASSEMBLY BRACKET WITH BRACKET MOUNTING SCREWS LOOSENED.

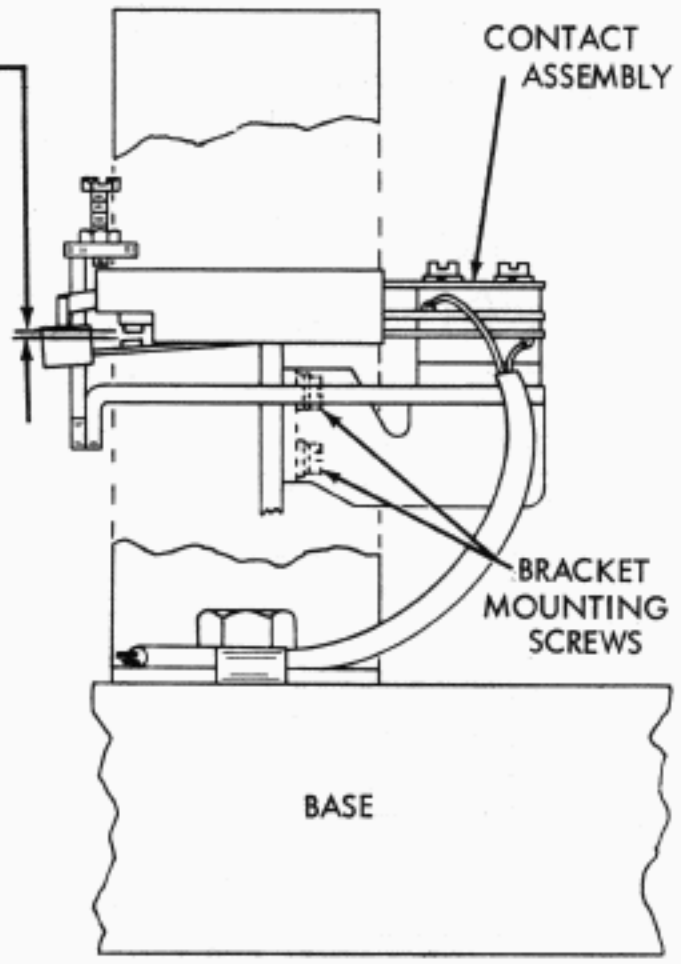

LEFT VIEW

KEEP CONTACTS FREE OF OIL AND GREASE

MAKE THE FOLLOWING ADJUSTMENTS BEFORE INSTALLING CHARACTER GENERATOR MECHANISM ON KEYBOARD.

(B) MAGNET YOKE
SEE FIG. 2-57(A)

(C) STOP LEVER LATCH
SEE FIG. 2-57(B)

MAKE THE FOLLOWING ADJUSTMENTS DURING INSTALLATION OF ANSWER-BACK MECHANISM.

(D) SENSING LEVER SPRING
SEE FIG. 2-58(B)

(E) DETENT LEVER SPRING
SEE FIG. 2-58(C)

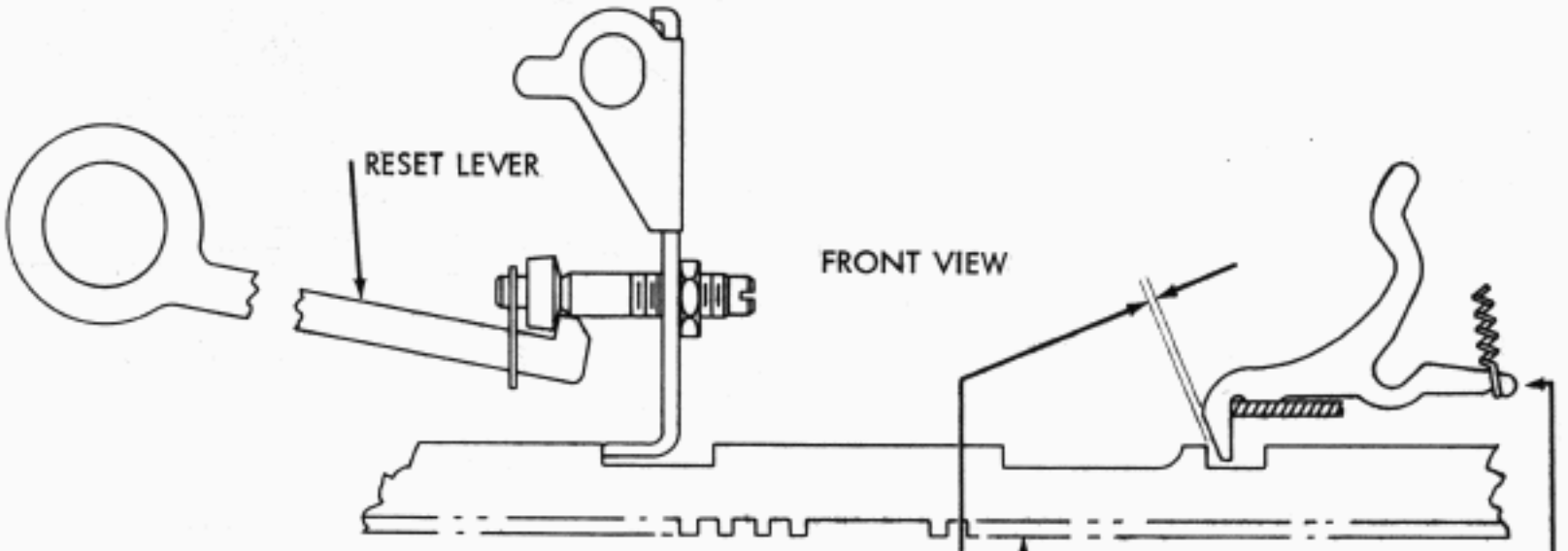

(F) CHARACTER GENERATOR MOUNTING PLATE
REQUIREMENT
1. CLEARANCE BETWEEN SHOULDERS OF CODE BARS #1 AND #5 AND THEIR ASSOCIATED SENSING LEVERS SHOULD BE MIN. 0.008 INCH --- MAX. 0.018 INCH
2. SENSING LEVERS SHOULD BE ALIGNED WITH THEIR ASSOCIATED CODE BARS.
TO CHECK
WITH THE CLUTCH ENGAGED AND LETTERS COMBINATION SELECTED ROTATE MAIN SHAFT UNTIL RESET LEVER IS IN EXTREME LEFT POSITION.
TO ADJUST
POSITION MOUNTING PLATE WITH THE THREE MOUNTING SCREWS LOOSENED.

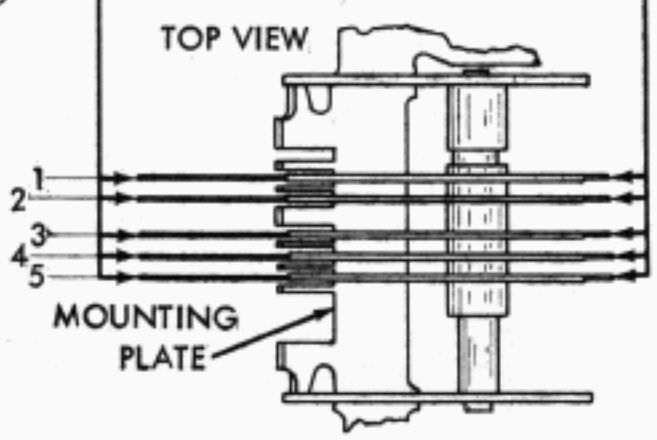

FIGURE 2-67. KEYBOARD, ANSWER-BACK MECHANISM ("FIGS" "C")

26. ANSWER-BACK MECHANISM (DIAL TWX)
FOR KEYBOARDS LK3, LK4 AND LK5 (BELL 28A AND 28C)

(A) DRIVE LINK SPRING
REQUIREMENT
WITH SIGNAL GENERATOR CLUTCH IN STOP POSITION
MIN. 12 OZS.
MAX. 18 OZS.
TO PULL SPRING TO INSTALLED LENGTH.

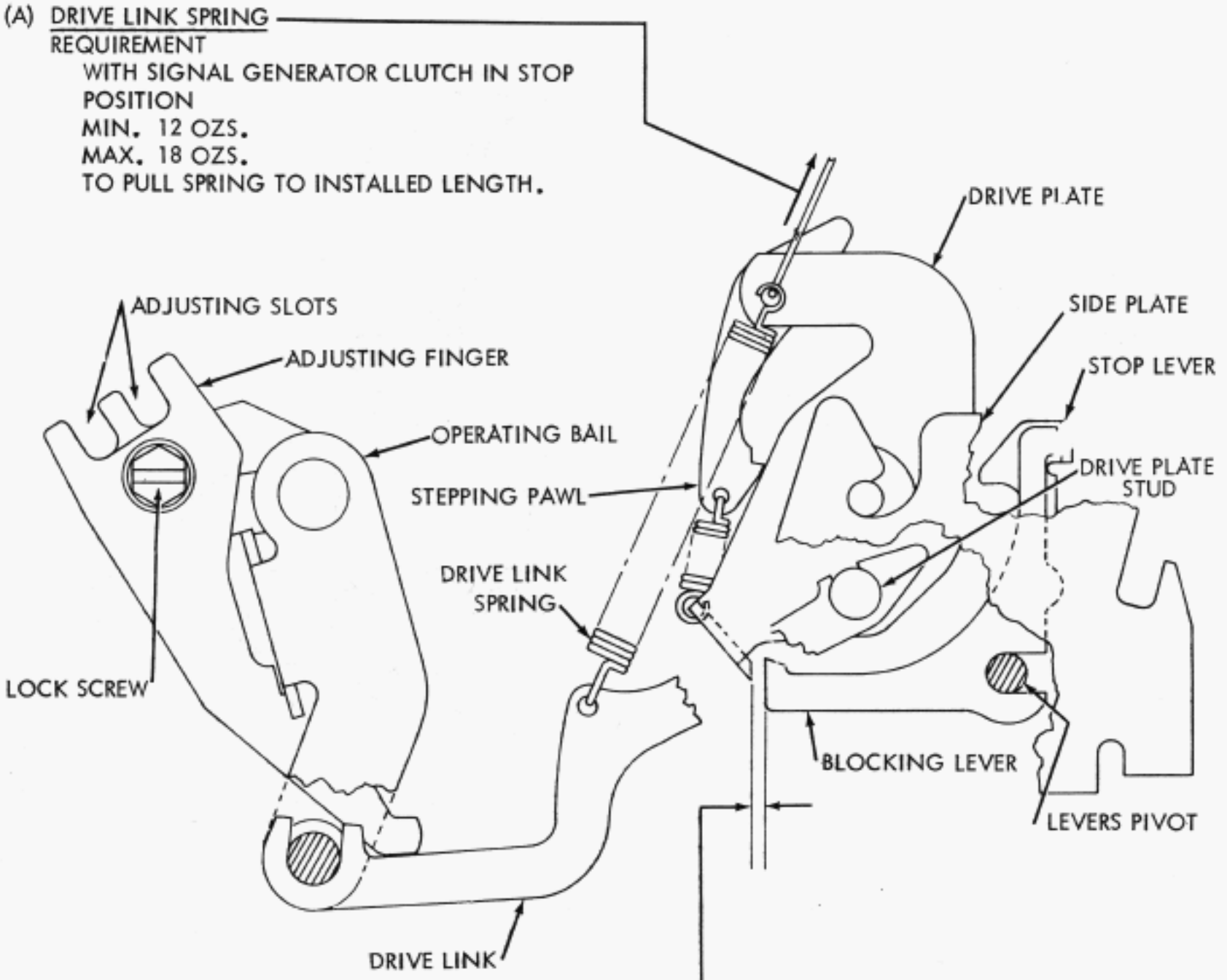

(B) DRIVE LINK
PERFORM THIS ADJUSTMENT BEFORE INSTALLATION OF MESSAGE DRUM AND DRIVE PLATE ASSEMBLY.
REQUIREMENT
CLEARANCE BETWEEN DRIVE PLATE EXTENSION AND BLOCKING LEVER SHOULD BE
MIN. 0.002 INCH
MAX. 0.007 INCH
TO CHECK
CODE BAR BAIL RESET LEVER IN EXTREME LEFT POSITION.
TO ADJUST
POSITION ADJUSTING FINGER AT ADJUSTING SLOTS WITH ADJUSTING FINGER LOCK-SCREW LOOSENED.

NOTE

THE STANDARD KEYBOARD ADJUSTMENTS LISTED BELOW SHOULD BE CHECKED DURING INSTALLATION OF THE ANSWER-BACK MECHANISM:
CODE BAR AND CODE LEVER CLEARANCE, FIGURE 1-5 (D)
CODE BAR BAIL, FIGURE 1-7 (B)
CODE BAR BAIL AND NON-REPEAT LEVER CLEARANCE, FIGURE 1-7 (D)
UNIVERSAL BAIL LATCH LEVER, FIGURE 1-8 (A)
UNIVERSAL BAIL EXTENSION, FIGURE 1-8 (E)

FIGURE 2-68. KEYBOARD, ANSWER-BACK MECHANISM ("FIGS" "C")

26. ANSWER-BACK MECHANISM (DIAL TWX)
FOR KEYBOARDS LK3, LK4 AND LK5 (BELL 28A AND 28C)

(A) STEPPING PAWL

MAKE THIS ADJUSTMENT AFTER INSTALLATION OF THE MECHANISM ON KEYBOARD.

REQUIRMENT

CLEARANCE BETWEEN STEPPING PAWL AND ADJACENT CODE BLADE SHOULD BE
MIN. 0.018 INCH
MAX. 0.030 INCH

TO CHECK

MESSAGE DRUM IN FULLY DETENTED POSITION. CODE BARS BAIL RESET LEVER IN EXTREME LEFT POSITION.

TO ADJUST

LOOSEN LOCK NUT AND POSITION ECCENTRIC STUD WITH ITS HIGH POINT TOWARD THE TOP.

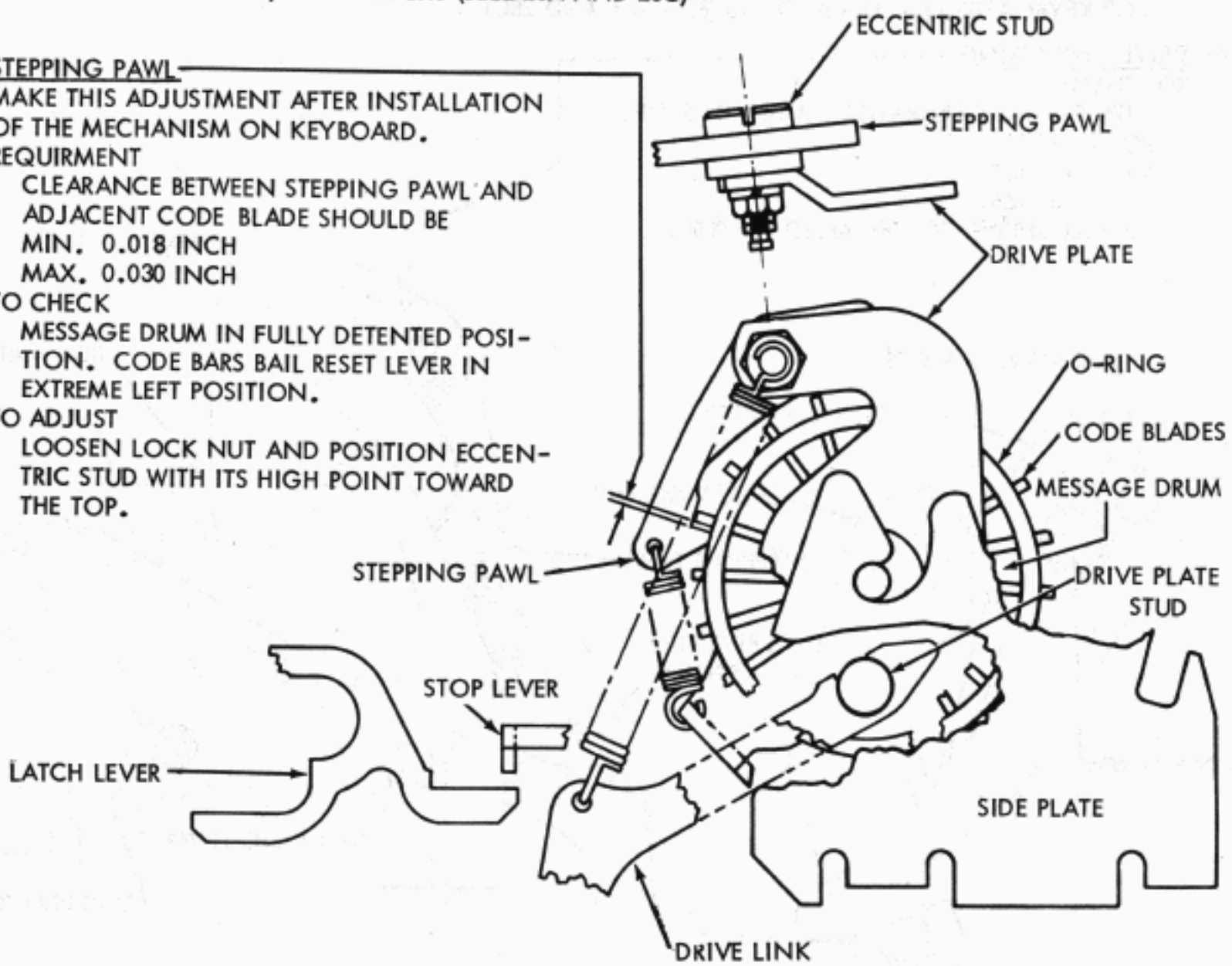

(B) STEPPING PAWL SPRING

REQUIREMENT

MECHANISM IN STOP POSITION
MIN. 2-1/2 OZS. --- MAX. 3-1/2 OZS.
TO START PAWL MOVING.

(C) STOP LEVER SPRING

REQUIREMENT

STOP LEVER LATCHED. LATCH SPRING REMOVED. BLOCKING LEVER SPRING REMOVED
MIN. 6 OZS. --- MAX. 8 OZS.
TO START STOP LEVER MOVING

BLOCKING LEVER SPRING
SEE FIGURE 2-61(A)

ARMATURE LATCH SPRING
SEE FIGURE 2-61(B)

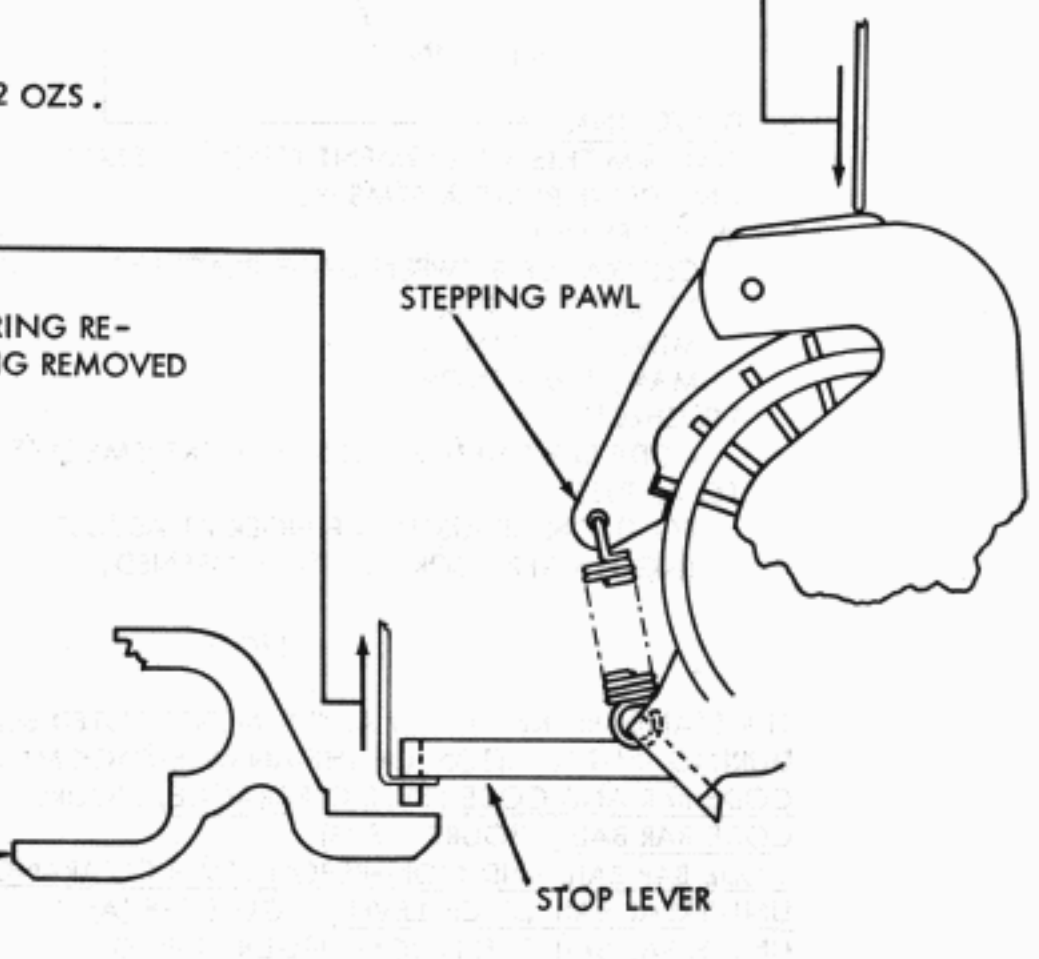

CODING THE MESSAGE DRUM
SEE FIGURE 2-62

FIGURE 2-69. KEYBOARD, ANSWER-BACK MECHANISM ("FIGS" "C")

27. VARIABLE SPEED DRIVE MECHANISM

(C) GEAR BRACKET

1. REQUIREMENT
   BACKLASH BETWEEN TYPING UNIT DRIVEN GEAR AND TYPING UNIT DRIVING GEAR SHOULD BE
   MIN. 0.002 INCH --- MAX. 0.006 INCH
   AT POINT WHERE BACKLASH IS LEAST.
   TO CHECK
   VARIABLE SPEED DRIVE MECHANISM AND TYPING UNIT MOUNTED IN PLACE AND GEAR GUARD REMOVED.
   TO ADJUST
   LOOSEN LEFT FRONT MOTOR BRACKET MOUNTING SCREW TO FRICTION TIGHT. POSITION GEAR BRACKET ASSEMBLY BY MEANS OF ADJUSTING SLOT LOCATED AT REAR OF ASSEMBLY. ALIGN GEARS BEFORE TIGHTENING MOUNTING SCREW.

2. REQUIREMENT
   BACKLASH BETWEEN MOTOR PINION AND IDLER GEAR SHOULD BE
   MIN. 0.002 INCH
   MAX. 0.006 INCH
   AT POINT WHERE BACKLASH IS LEAST.
   TO ADJUST
   RAISE OR LOWER FRONT END OF GEAR BRACKET BY MEANS OF ADJUSTING AND CLAMPING SCREWS. SEE FIGURE BELOW

NOTE RECHECK REQUIREMENT 1 AND REFINE BOTH 1 AND 2 IF NECESSARY

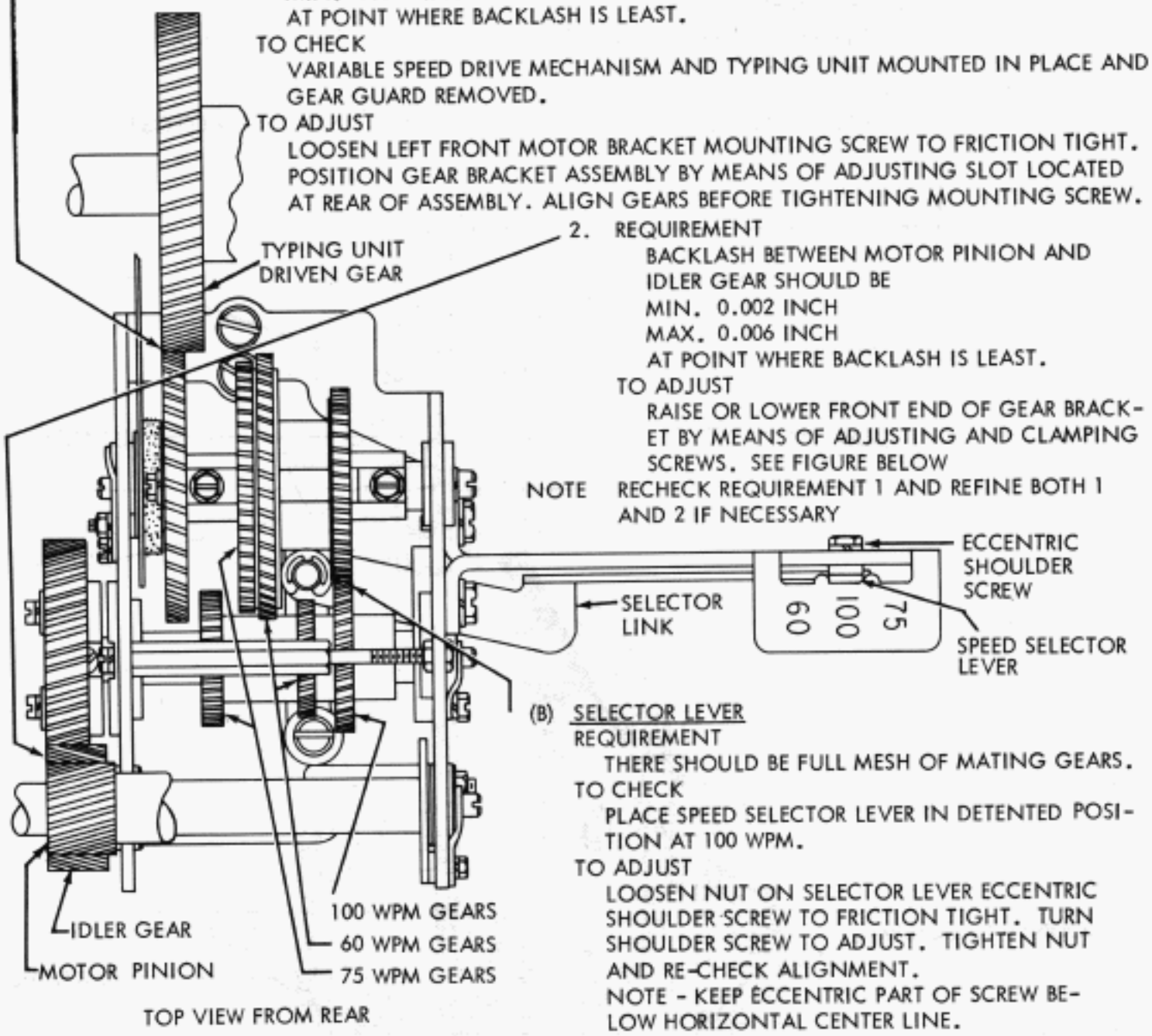

TOP VIEW FROM REAR

(B) SELECTOR LEVER

REQUIREMENT
THERE SHOULD BE FULL MESH OF MATING GEARS.
TO CHECK
PLACE SPEED SELECTOR LEVER IN DETENTED POSITION AT 100 WPM.
TO ADJUST
LOOSEN NUT ON SELECTOR LEVER ECCENTRIC SHOULDER SCREW TO FRICTION TIGHT. TURN SHOULDER SCREW TO ADJUST. TIGHTEN NUT AND RE-CHECK ALIGNMENT.
NOTE - KEEP ECCENTRIC PART OF SCREW BELOW HORIZONTAL CENTER LINE.

PERFORM ADJUSTMENT (A) AND (B) BEFORE INSTALLATION OF DRIVE ASSEMBLY.

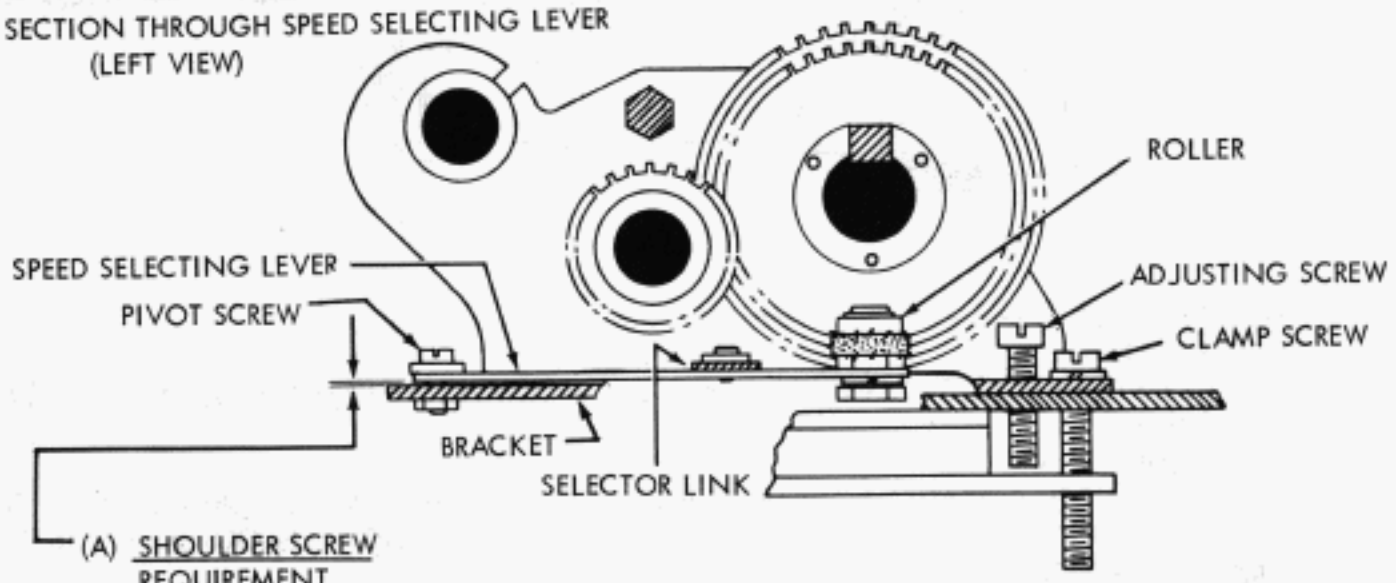

(A) SHOULDER SCREW

REQUIREMENT
BARELY PERCEPTIBLE CLEARANCE BETWEEN GEAR ASSEMBLY BRACKET AND SELECTING LEVER AT SHOULDER SCREW PIVOT.
TO ADJUST
TIGHTEN SHOULDER SCREW TO FRICTION TIGHT AND THEN LOOSEN 1/8 TURN. TIGHTEN THE LOCK NUT.

FIGURE 2-70. KEYBOARD OR BASE, VARIABLE SPEED DRIVE MECHANISM

27. VARIABLE SPEED DRIVE MECHANISM

(B) HUB POSITION

REQUIREMENT

CLEARANCE BETWEEN HUB ECCENTRIC AND PLATE SHOULD BE MIN. 0.005 INCH

TO ADJUST

POSITION HUB ON SHAFT WITH ITS MOUNTING SCREW LOOSENED.

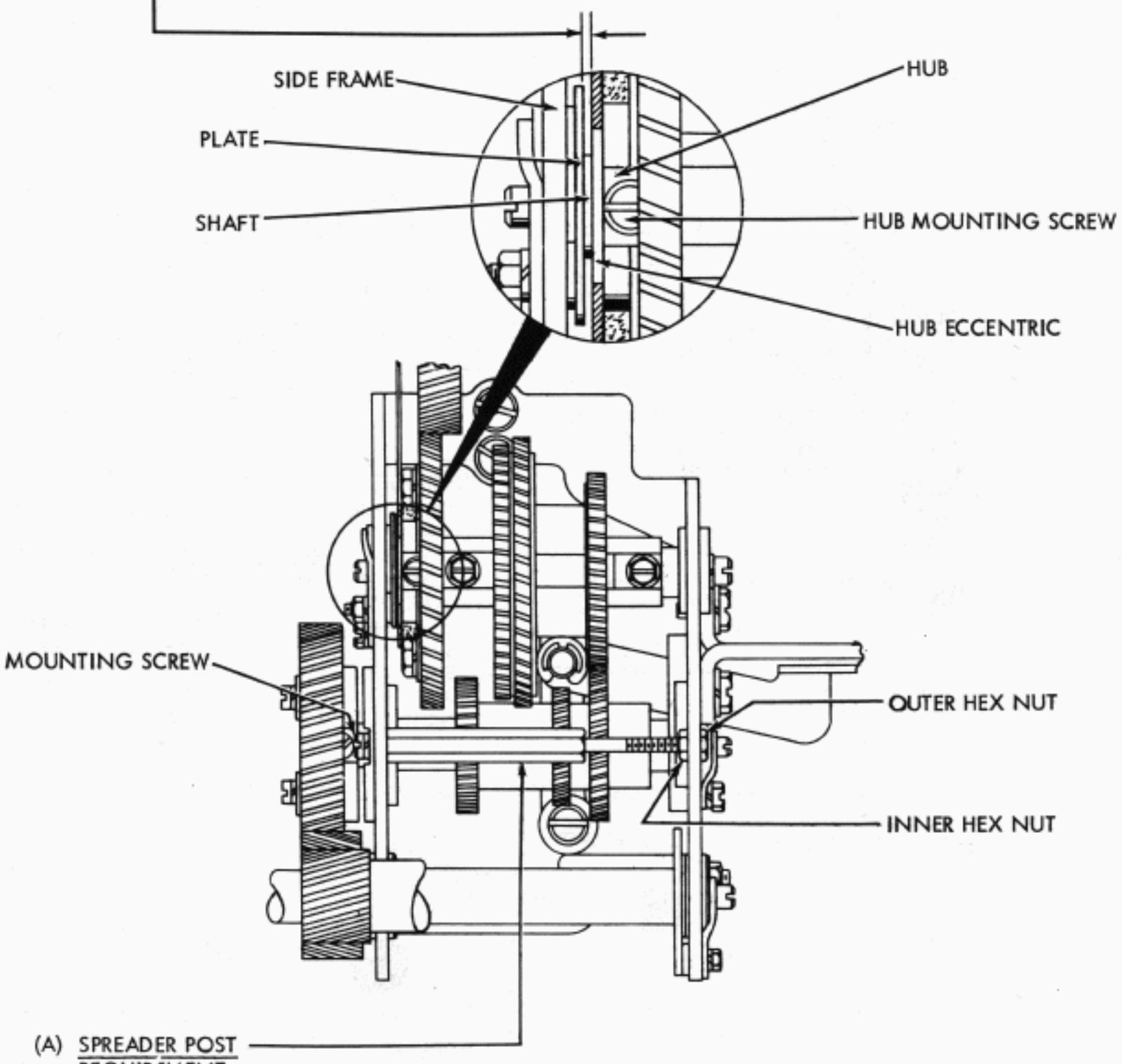

(A) SPREADER POST

REQUIREMENT

THE SPREADER POST SHOULD NOT SPREAD OR COMPRESS SIDES OF VARIABLE SPEED DRIVE ASSEMBLY.

TO ADJUST

LOOSEN BOTH SPREADER POST HEX NUTS. TIGHTEN POST MOUNTING SCREW. TURN INNER HEX NUT UNTIL IT TOUCHES INNER SIDE OF BRACKET. TIGHTEN OUTER HEX NUT TO LOCK POST IN POSITION.

CAUTION: IMPROPER ASSEMBLY MAY CAUSE MISALIGNMENT RESULTING IN SHORTENED BEARING LIFE.

FIGURE 2-71. KEYBOARD OR BASE, VARIABLE SPEED DRIVE MECHANISM

28. GEAR SHIFT MECHANISM - REMOTE CONTROL

GEAR SHIFT MECHANISM

REQUIREMENT

THE BACKLASH BETWEEN THE MOTOR PINION AND ITS DRIVEN GEAR AND BETWEEN THE TYPING UNIT DRIVEN GEAR AND ITS DRIVING GEAR SHOULD BE MIN. 0.004 INCH --- MAX. 0.008 INCH AT POINT OF MINIMUM BACKLASH.

TO ADJUST

LOOSEN THE FOUR SCREWS WHICH MOUNT THE ASSEMBLY BRACKET TO BASE. LOOSEN THE NUT-PLATE MOUNTING SCREW AT FRONT OF ASSEMBLY BRACKET. LOOSEN LOCK NUTS ON ADJUSTING BUSHINGS. POSITION GEAR SHIFT BRACKET ASSEMBLY FRONT TO REAR. RAISE OR LOWER REAR OF ASSEMBLY BY ROTATING ADJUSTING BUSHING NEAREST THE MOTOR. POSITION OTHER BUSHING AGAINST BASE PLATE AND TIGHTEN ALL SCREWS AND LOCK NUT.

GEAR SHIFT MAGNET ARMATURE SPRING

REQUIREMENT

MAGNET DE-ENERGIZED
MIN. 2-1/2 OZS.
MAX. 7 OZS.
TO START ARMATURE MOVING

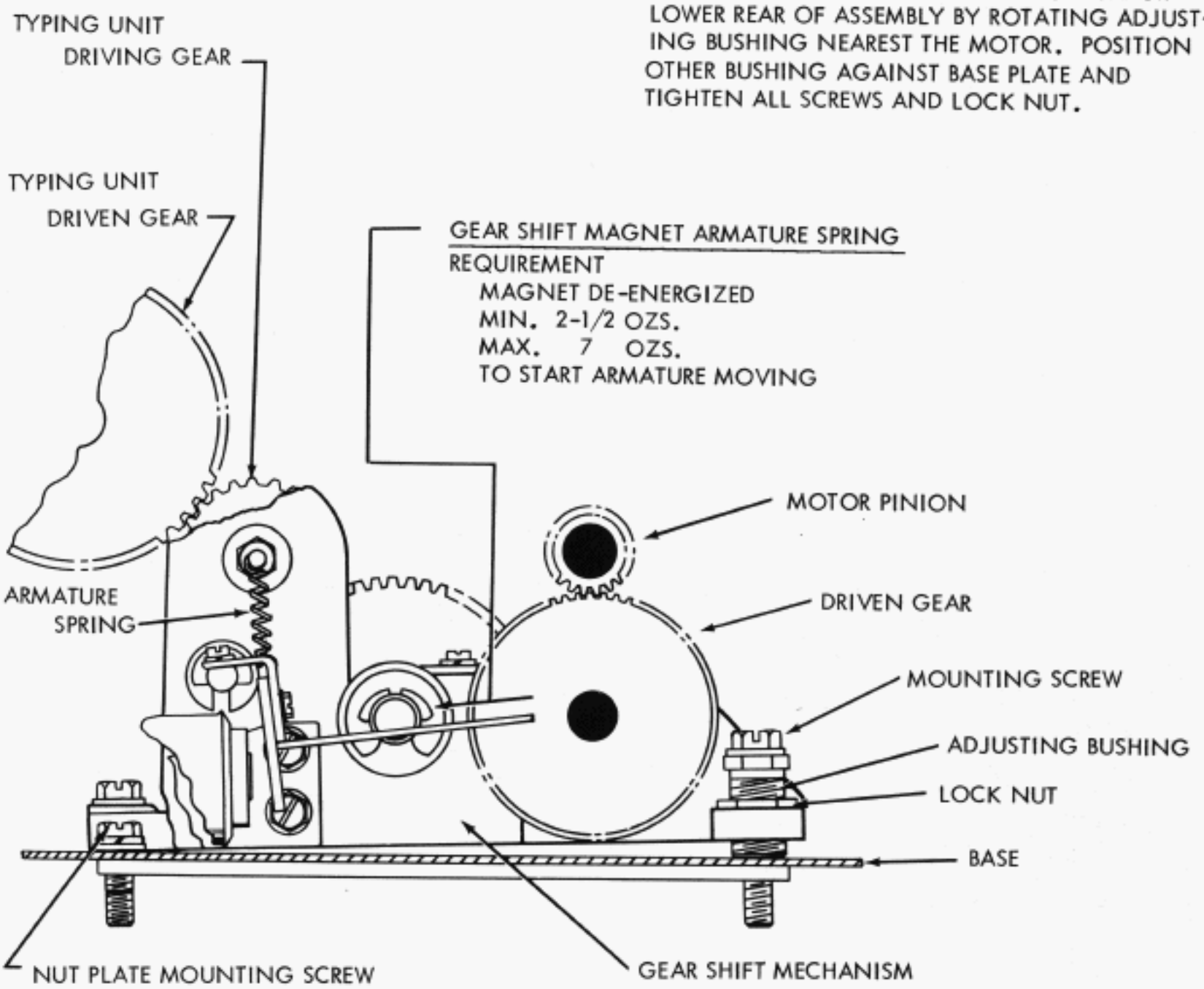

FIGURE 2-72. KEYBOARD, REMOTE CONTROL GEAR SHIFT MECHANISM

28. GEAR SHIFT MECHANISM - REMOTE CONTROL

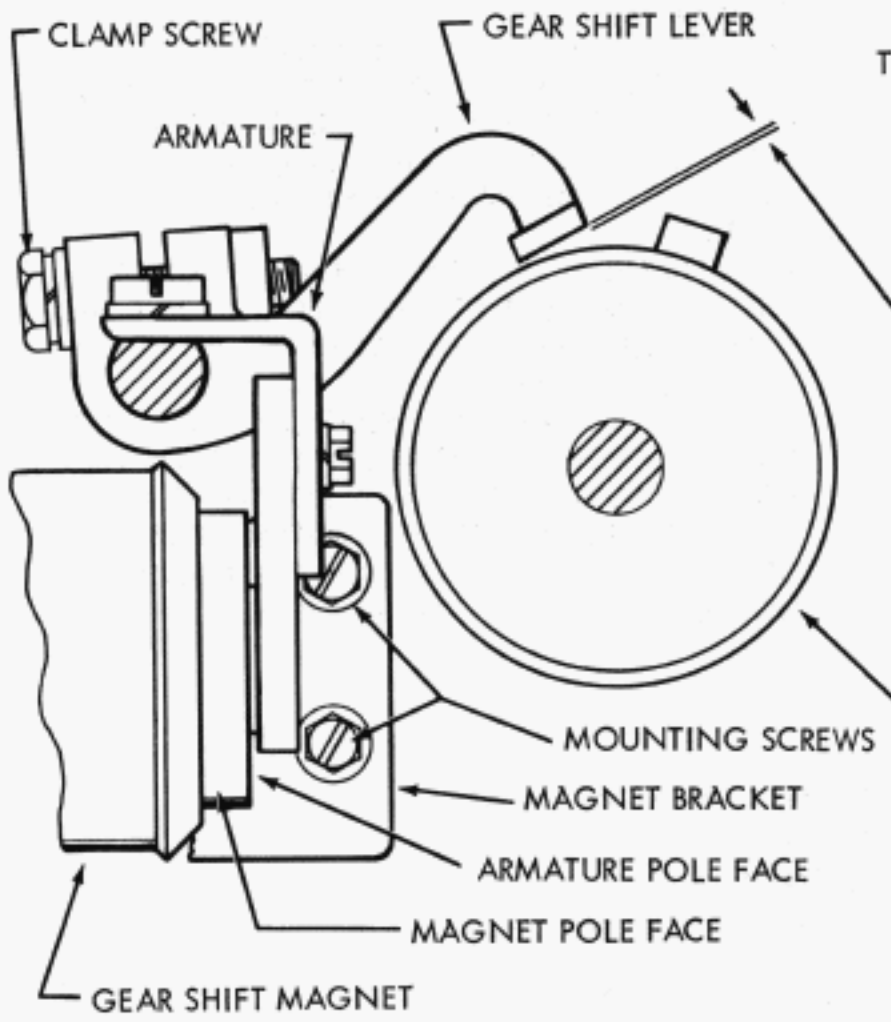

GEAR SHIFT MAGNET

REQUIREMENT

THE POLE FACE OF THE ARMATURE SHOULD MEET THE POLE FACE OF THE MAGNET SQUARELY

TO ADJUST

POSITION ARMATURE WITH GEAR SHIFT LEVER CLAMP SCREW LOOSENED AND POSITION MAGNET BRACKET WITH ITS MOUNTING SCREWS LOOSENED.

CLUTCH STOP LEVER

REQUIREMENT

ARMATURE RESTING AGAINST MAGNET POLE FACE, CLEARANCE BETWEEN GEAR SHIFT LEVER AND THE SLEEVE

MIN. 0.002 INCH

MAX. 0.010 INCH

TO ADJUST

POSITION GEAR SHIFT LEVER WITH ITS CLAMP SCREW LOOSENED.

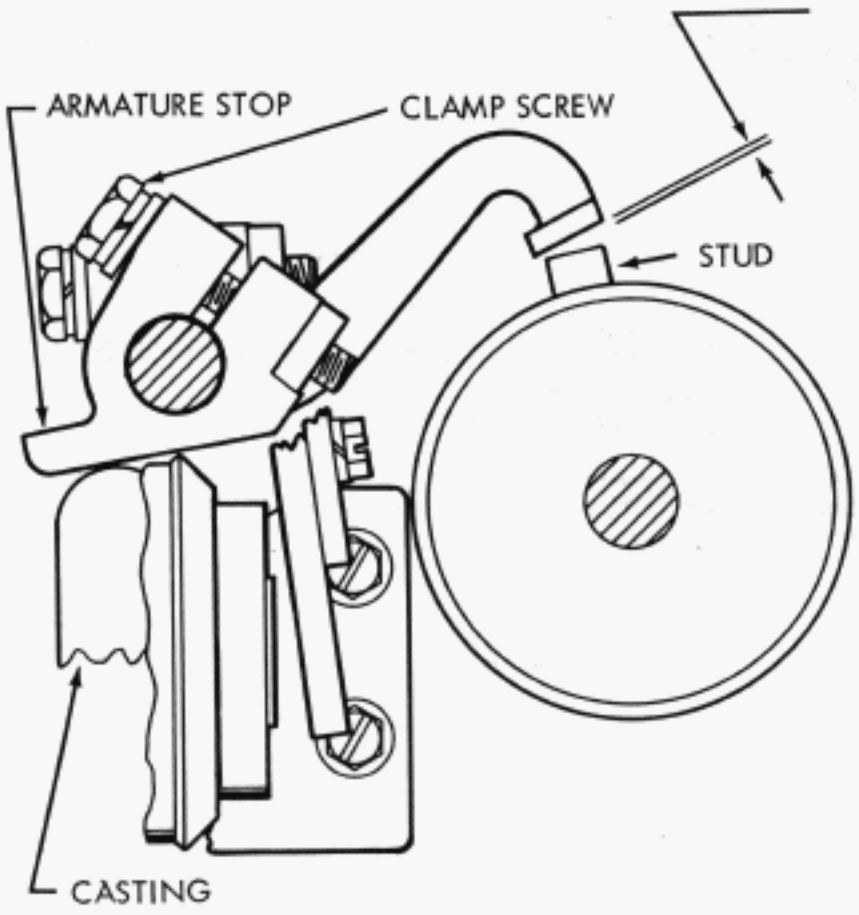

ARMATURE STOP

REQUIREMENT

WITH ARMATURE IN ITS OPEN POSITION AND THE ARMATURE STOP AGAINST THE CASTING, CLEARANCE BETWEEN GEAR SHIFT LEVER AND STUD ON SLEEVE

MIN. 0.010 INCH

MAX. 0.020 INCH

TO ADJUST

HOLD GEAR SHIFT LEVER IN POSITION AND POSITION ARMATURE STOP WITH ITS CLAMP SCREW LOOSENED UNTIL REQUIREMENT IS MET.

FIGURE 2-73. KEYBOARD, REMOTE CONTROL GEAR SHIFT MECHANISM

29. UNIVERSAL CONTACT (SELECTOR)

(A) CONTACT MOUNTING BRACKET

REQUIREMENT

THE DRIVE ARM LINKAGE SHOULD BE VERTICALLY ALIGNED TO PREVENT BINDS.

TO ADJUST

POSITION THE CONTACT MOUNTING BRACKET WITH ITS MOUNTING SCREWS LOOSENED.

(B) CONTACT BLOCK

REQUIREMENT

THE CONTACT FACES SHOULD BE IN A VERTICAL STRAIGHT LINE

TO ADJUST

LOOSEN THE TWO CONTACT MOUNTING SCREWS. PRESS THE CONTACT BLOCK TOWARD THE REAR OF THE TYPING UNIT FIRMLY AGAINST THE SCREWS AND TIGHTEN THE SCREWS.

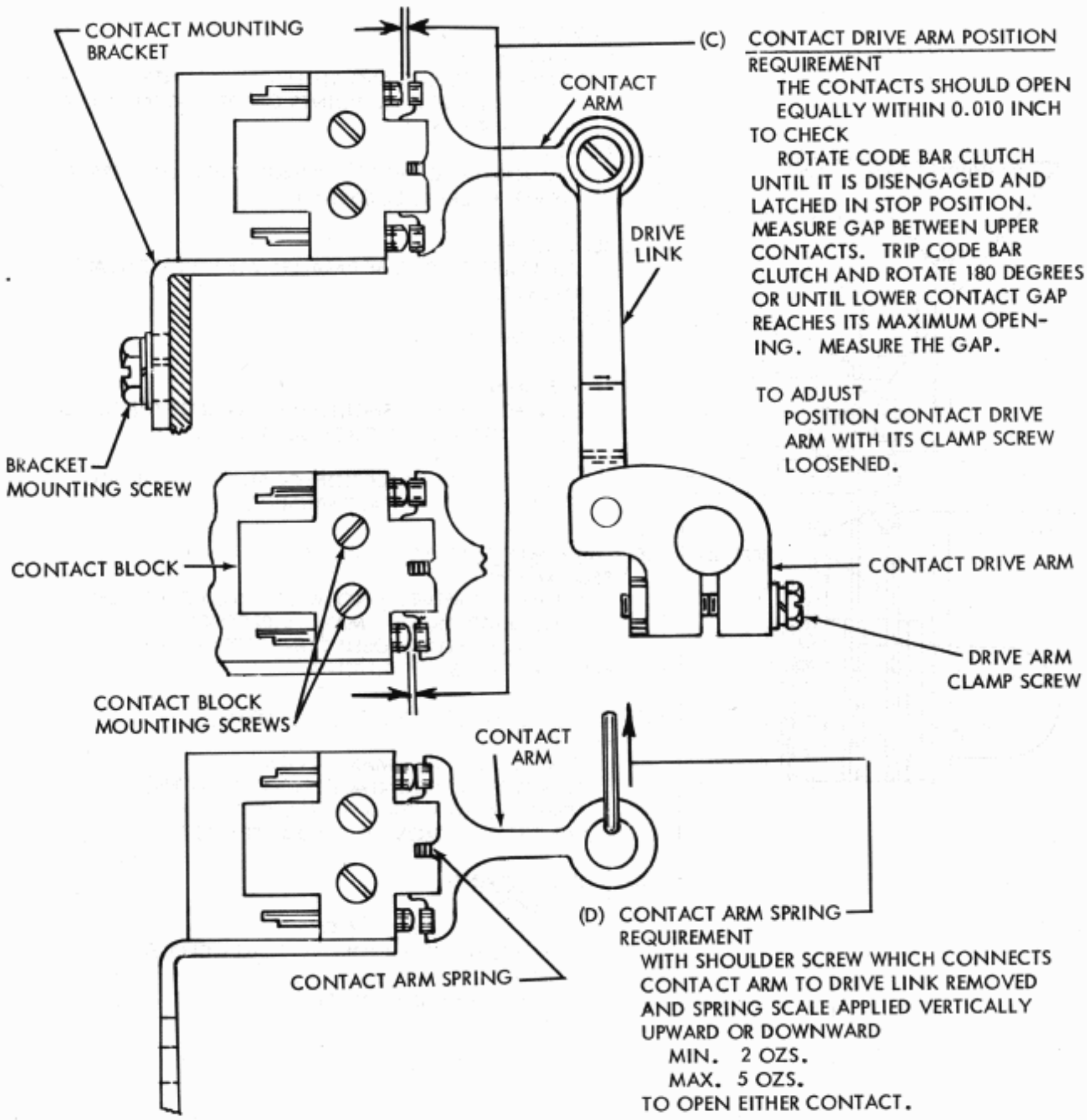

(C) CONTACT DRIVE ARM POSITION

REQUIREMENT

THE CONTACTS SHOULD OPEN EQUALLY WITHIN 0.010 INCH

TO CHECK

ROTATE CODE BAR CLUTCH UNTIL IT IS DISENGAGED AND LATCHED IN STOP POSITION. MEASURE GAP BETWEEN UPPER CONTACTS. TRIP CODE BAR CLUTCH AND ROTATE 180 DEGREES OR UNTIL LOWER CONTACT GAP REACHES ITS MAXIMUM OPENING. MEASURE THE GAP.

TO ADJUST

POSITION CONTACT DRIVE ARM WITH ITS CLAMP SCREW LOOSENED.

(D) CONTACT ARM SPRING

REQUIREMENT

WITH SHOULDER SCREW WHICH CONNECTS CONTACT ARM TO DRIVE LINK REMOVED AND SPRING SCALE APPLIED VERTICALLY UPWARD OR DOWNWARD

MIN. 2 OZS.

MAX. 5 OZS.

TO OPEN EITHER CONTACT.

FIGURE 2-74. TYPING UNIT, UNIVERSAL CONTACT (SELECTOR)

30. UNIVERSAL CONTACT (STUNT BOX)

NOTE 1. THESE ADJUSTMENTS SHOULD BE MADE WITH THE CONTACT BRACKET ASSEMBLY REMOVED.

2. IF CONTACT MOUNTING SCREWS ARE DISTURBED TO OBTAIN A REQUIREMENT, THEY MUST BE RETIGHTENED AND ALL PRECEEDING REQUIREMENTS RECHECKED.

CAUTION: IF IT IS NECESSARY TO INCREASE THE CONTACT SPRING TENSIONS, IT IS ADVISABLE TO REMOVE THE CONTACT SPRING TO INCREASE ITS CURVATURE. AVOID DAMAGE TO CONTACT SPRINGS WHEN ADJUSTING THE STIFFENERS IN THE ASSEMBLY.

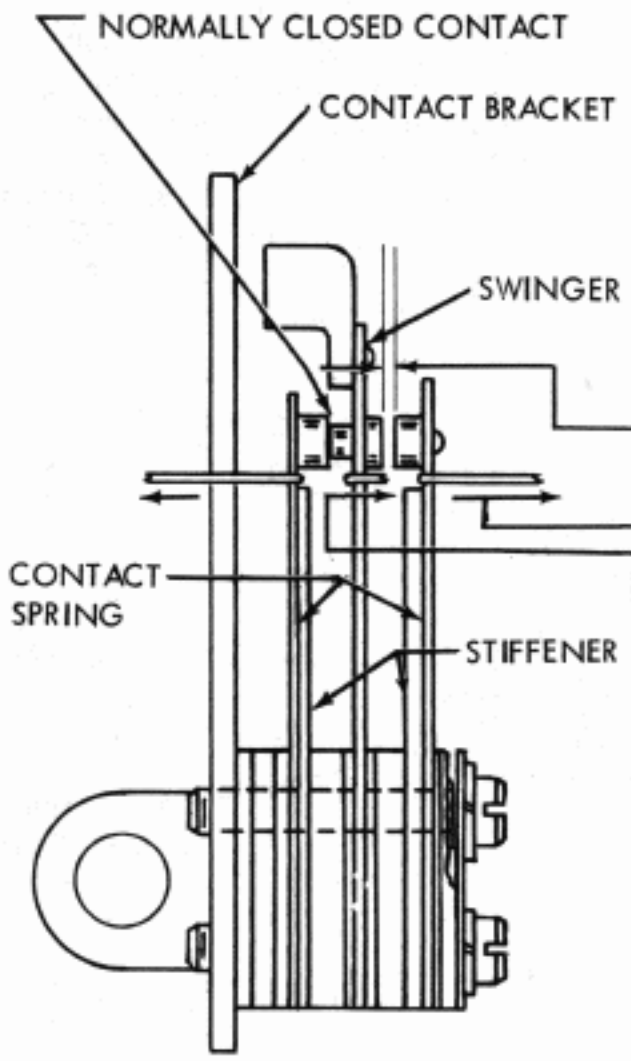

(A) CONTACT

1. REQUIREMENT
CONTACT SPRINGS AND STIFFENERS MOUNTED VERTICALLY AND CONTACT POINTS OF SPRINGS IN ALIGNMENT (GAGE BY EYE).
TO ADJUST
POSITION THE CONTACT SPRINGS AND STIFFENERS WITH ASSEMBLY SCREWS LOOSENED.

2. REQUIREMENT
STIFFENERS SHOULD BE PARALLEL WITH THE CONTACT BRACKET.
TO ADJUST
BEND THE STIFFENER.

3. REQUIREMENT
CONTACT SPRINGS SHOULD REST AGAINST THE TOP OF THEIR STIFFENERS THROUGHOUT THEIR WIDTH.
TO ADJUST
BEND TOP FORMED SECTION OF STIFFENER. IF NECESSARY, BEND CONTACT SPRINGS.

(B) NORMALLY OPEN CONTACT GAP
REQUIREMENT
CLEARANCE BETWEEN NORMALLY OPEN CONTACTS
MIN. 0.020 INCH --- MAX. 0.025 INCH
WITH NORMALLY CLOSED CONTACTS CLOSED.
TO ADJUST --- BEND STIFFENER

(C) CONTACT SPRING TENSION (TWO SPRINGS)
REQUIREMENT
MIN. 2 OZS. --- MAX. 3 OZS.
TO MOVE EACH CONTACT SPRING AWAY FROM ITS STIFFENER, WITH THE SWINGER HELD AWAY.
TO ADJUST --- REMOVE AND FORM SPRING.

(D) SWINGER SPRING
REQUIREMENT
MIN. 4 OZS. --- MAX. 6 OZS.
TO MOVE SWINGER FROM NORMALLY CLOSED CONTACT.
TO ADJUST --- BEND SWINGER

FIGURE 2-75. TYPING UNIT, UNIVERSAL CONTACT (STUNT BOX)

30. UNIVERSAL CONTACT (STUNT BOX)

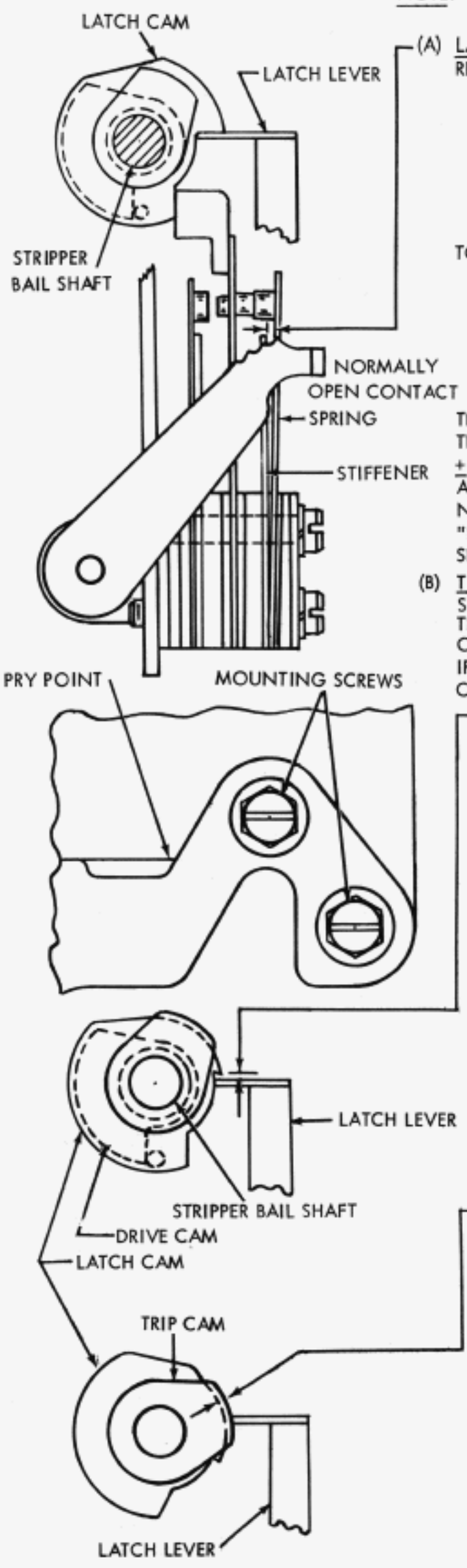

NOTE: THE FOLLOWING ADJUSTMENTS ARE TO BE MADE WITH THE CONTACT ASSEMBLY INSTALLED ON THE STUNT BOX.

(A) LATCH

REQUIREMENT

WITH THE MAIN SHAFT ROTATED UNTIL THE STRIPPER BAIL SHAFT HAS REACHED ITS EXTREME COUNTERCLOCKWISE POSITION AND THE LATCH CAM LATCHED BY THE LATCH LEVER, CLEARANCE BETWEEN NORMALLY OPEN CONTACT AND UPPER END OF ITS STIFFENER

MIN. 0.003 INCH
MAX. 0.008 INCH

TO ADJUST

LOOSEN CONTACT BRACKET MOUNTING SCREWS. MOVE BRACKET TO ITS HIGHEST POSITION. WITH SCREWDRIVER IN PRY POINT MOVE BRACKET DOWNWARD UNTIL REQUIREMENT IS MET. THE LATCH LEVER SHOULD ENGAGE BOTH CAMS BY THEIR FULL THICKNESS.

NOTE

THE UNIVERSAL CONTACT SHOULD BE ADJUSTED SO THAT THE NORMALLY OPEN CONTACT SHALL CLOSE WITHIN ± 6 MILLISECONDS OF THE STUNT BOX CONTACT CLOSURE AND SHOULD OPEN WITHIN ± 5 MILLISECONDS OF THE NORMALLY OPEN STUNT BOX CONTACT OPENING. THE "BLANK" CHARACTER STUNT BOX CONTACT IN SLOT 36 SHOULD BE USED AS THE REFERENCE FOR THIS ADJUSTMENT.

(B) TIMING

SINCE THE CONTACTS CAN BE ADJUSTED FOR VARIED TIMING, THE BEST PROCEDURE IS TO UTILIZE A DISTORTION TEST SET OR AN INDICATOR LAMP TO CHECK FOR PROPER ADJUSTMENT. IF THIS TEST EQUIPMENT IS NOT AVAILABLE, ADJUSTMENT CAN BE MADE AS FOLLOWS:

(C) DRIVE CAM (TIMING)

REQUIREMENT

WITH THE MAIN SHAFT ROTATED UNTIL THE STRIPPER BAIL SHAFT HAS REACHED ITS EXTREME COUNTERCLOCKWISE POSITION THERE SHOULD BE

MIN. 0.003 INCH
MAX. 0.008 INCH

BETWEEN THE TOP OF THE LATCH LEVER AND THE NOTCH OF THE LATCH CAM AT THE CLOSEST POINT WHEN PLAY IN STRIPPER BAIL SHAFT IS TAKEN UP FOR MINIMUM.

TO ADJUST

TURN DRIVE CAM ON SHAFT WITH ITS MOUNTING SCREW LOOSENED.

NOTE

THIS PROCEDURE PROVIDES THE LATEST POSSIBLE CLOSURE TIME. IF AN EARLIER CLOSURE TIME IS DESIRABLE, VARY POSITION OF CAM OR USE TEST SET.

(D) TRIP CAM (TIMING)

REQUIREMENT

WITH MAIN SHAFT ROTATED UNTIL THE STRIPPER BAIL SHAFT HAS REACHED ITS EXTREME CLOCKWISE POSITION, THE LATCH LEVER SHOULD BE RESTING ON THE TRIP CAM AND THE CLEARANCE BETWEEN THE LATCH LEVER AND THE LATCH CAM SHOULD BE

MIN. 0.003 INCH
MAX. 0.008 INCH

TO ADJUST

ROTATE TRIP CAM ON ITS SHAFT WITH ITS MOUNTING SCREW LOOSENED.

NOTE

THIS PROCEDURE PROVIDES THE LATEST POSSIBLE OPENING TIME FOR THE DRIVE CAM ADJUSTMENT. IF AN EARLIER OPENING TIME IS DESIRABLE, VARY THE POSITION OF CAM, OR USE A TEST SET.

FIGURE 2-76. TYPING UNIT, UNIVERSAL CONTACT (STUNT BOX)

30. UNIVERSAL CONTACT (STUNT BOX)

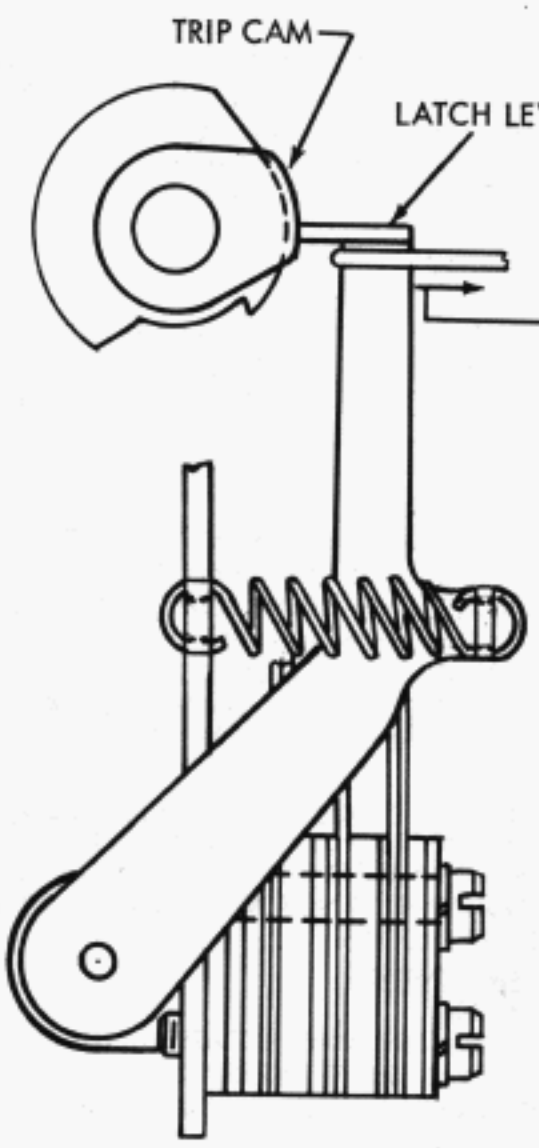

NOTE: THE FOLLOWING ADJUSTMENTS SHOULD BE MADE ONLY WHERE TIMING REQUIREMENTS ARE SPECIFIED FOR THE NORMALLY CLOSED CONTACTS. THEY MAY BE MODIFIED TO MEET OTHER SPECIFIC REQUIREMENTS.
COMPLETE ALL OF THE FOREGOING STANDARD ADJUSTMENTS FOR THE STUNT BOX UNIVERSAL CONTACT BEFORE PROCEEDING.

FIFTY MILLISECOND SPACING PULSE AT 100 WPM OPERATION

(A) NORMALLY OPEN CONTACT GAP (SEE (B) ON PAGE 2-72)
MIN. 0.010 INCH --- MAX. 0.025 INCH
IF THERE ARE NO SPECIFIED TIMING REQUIREMENTS FOR THE NORMALLY OPEN CONTACTS.

(B) NORMALLY CLOSED CONTACT SPRING
REQUIREMENT
NORMALLY CLOSED CONTACT SPRING SHOULD REST AGAINST TOP OF ASSOCIATED STIFFENER FOR FULL WIDTH OF CONTACT SPRING. (HOLD SWINGER AWAY)
ADJUST PER (A) 3 ON PAGE 2-72.

(C) TIMING OF NORMALLY CLOSED CONTACTS (FOR 50 MS PULSE)
PRELIMINARY
WITH MAIN SHAFT ROTATED UNTIL STRIPPER BAIL SHAFT HAS REACHED ITS EXTREME COUNTER-CLOCKWISE POSITION, BEND NORMALLY CLOSED CONTACT STIFFENER TO GIVE
MIN. 0.030 INCH --- MAX. 0.035 INCH
GAP BETWEEN NORMALLY CLOSED CONTACTS.
FINAL
CHECK SPACING PULSE WITH STROBOSCOPIC TEST SET. IF NECESSARY, REFINE DRIVE CAM TIMING (C) ON PAGE 2-73 WITHIN SPECIFIED .003 TO .008 LIMITS. RECHECK SWINGER SPRING TENSION (D) ON PAGE 2-72. REPEAT STROBE CHECK.

FIGURE 2-77. TYPING UNIT, UNIVERSAL CONTACT (STUNT BOX)

31. FORM ALIGNMENT SWITCH

(A) FORM FEED-OUT ADJUSTMENT
SEE FIGURES 2-26 AND 2-27

(B) FORM ALIGNMENT SWITCH
(REMOVE POWER FROM SWITCH)
REQUIREMENT
SWITCH SHOULD BE OPERATED WHEN SWITCH LEVER IS WITHIN 0.010 INCH OF BOTTOM OF NOTCH IN FORM-OUT DISK AND SHOULD NOT BE OPERATED WHEN LEVER IS ON OUTER EDGE OF DISK.
TO CHECK
1. ROTATE DISK UNTIL LEVER FALLS INTO NOTCH. PLACE 0.010 INCH FEELER GAGE BENEATH LEVER. LIFT LEVER AND ALLOW IT TO COME TO REST ON GAGE. SWITCH SHOULD BE OPERATED.
2. ROTATE DISK UNTIL LEVER RESTS ON OUTER EDGE. SWITCH SHOULD NOT BE OPERATED.
TO ADJUST
POSITION SWITCH, AT PRY POINTS, WITH ITS MOUNTING SCREWS LOOSENED.

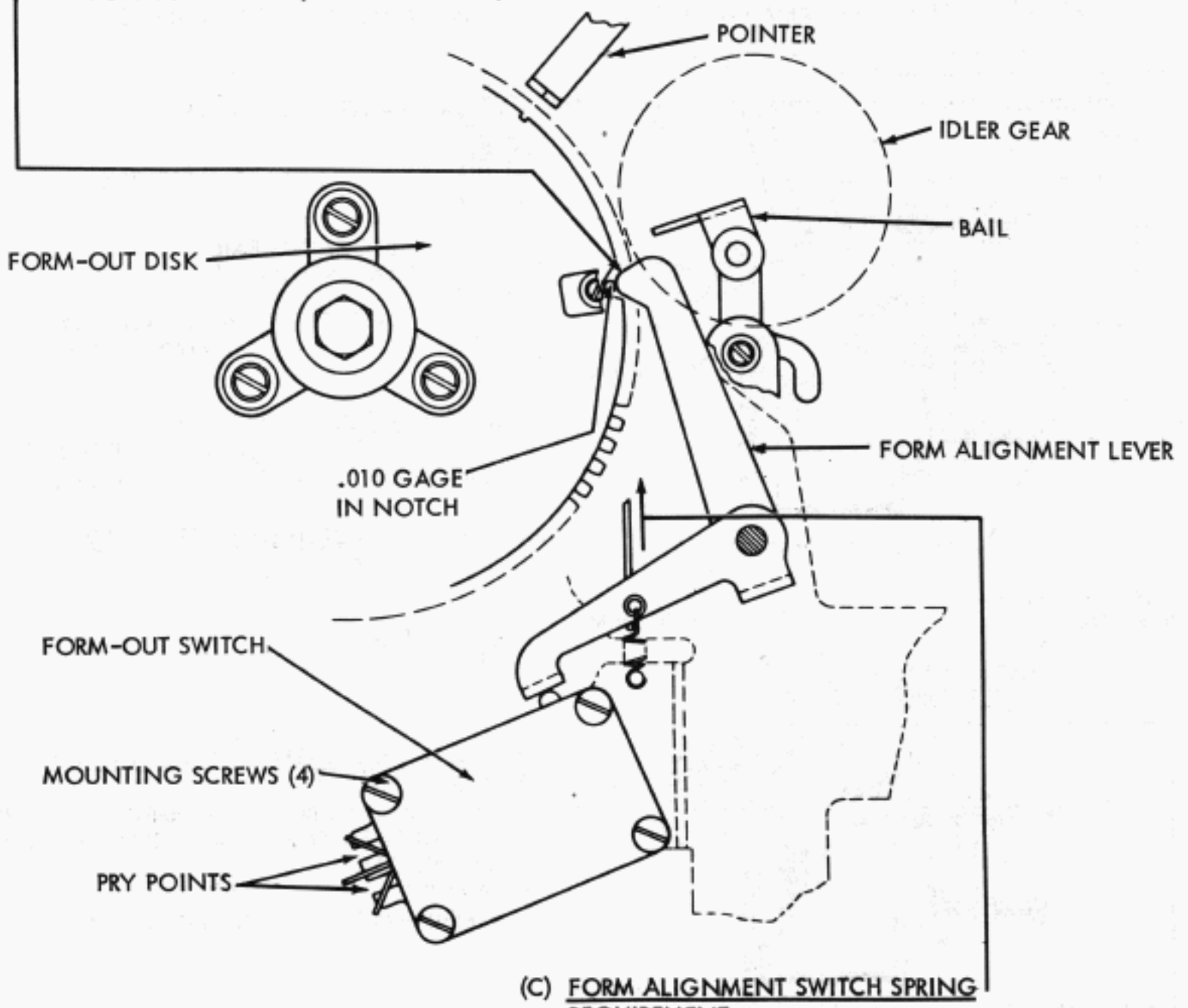

LEFT VIEW

(C) FORM ALIGNMENT SWITCH SPRING
REQUIREMENT
MIN. 6 OZS.
MAX. 8 OZS.
TO MOVE THE LEVER FROM OUTER-EDGE OF DISK.
TO CHECK
SWITCH OPERATING LEVER ON OUTER EDGE OF DISK (NOT IN NOTCH AS SHOWN)

FIGURE 2-78. TYPING UNIT, FORM ALIGNMENT MECHANISM

32. D.C. MAGNET OPERATED PRINT SUPPRESSION MECHANISM

(D) ARMATURE EXTENSION OVERTRAVEL

REQUIREMENT

1. OVERTRAVEL OF ARMATURE EXTENSION SHOULD BE MIN. 0.010 INCH --- MAX. 0.015 INCH
2. THERE SHOULD BE NO CLEARANCE BETWEEN BLOCKING SURFACE OF ARMATURE EXTENSION AND BOTTOM SURFACE OF SUPPRESSION ARM.

TO CHECK (REQUIREMENTS 1. AND 2.)

SUPPRESSION ARM BLOCKED BY BLOCKING BAIL EXTENSION. HOLD ARMATURE AGAINST POLE FACE OF MAGNET.

3. ROTATE BLOCKING BAIL EXTENSION. IT SHOULD SLIDE UNDER THE SUPPRESSION ARM WITH NO PERCEPTIBLE CLEARANCE.

TO CHECK (REQUIREMENT 3.)

SUPPRESSION ARM BLOCKED BY ARMATURE EXTENSION

TO ADJUST

PIVOT MAGNET BRACKET, UP OR DOWN AND TO THE FRONT OR REAR, WITH ITS MOUNTING SCREWS LOOSENED, USING AN ECCENTRIC ADJUSTING TOOL. PRESS ARMATURE EXTENSION FIRMLY AGAINST BOTTOM OF SUPPRESSION ARM. IF NECESSARY, ADD OR REMOVE SHIMS BETWEEN SUPPRESSION ARM AND TYPE BOX CLUTCH TRIP ARM. RECHECK (B) AND (C).

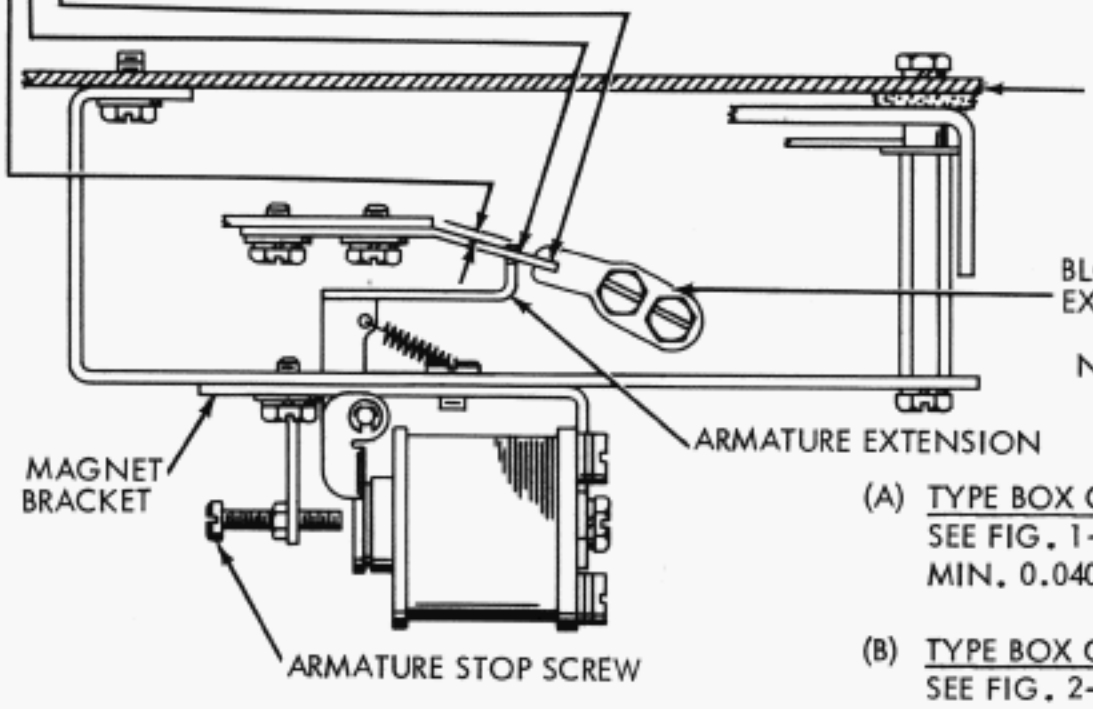

(A) TYPE BOX CLUTCH TRIP LEVER

SEE FIG. 1-33 AND REFINE REQUIREMENT TO MIN. 0.040 INCH --- MAX. 0.055 INCH

(B) TYPE BOX CLUTCH SUPPRESSION ARM

SEE FIG. 2-29

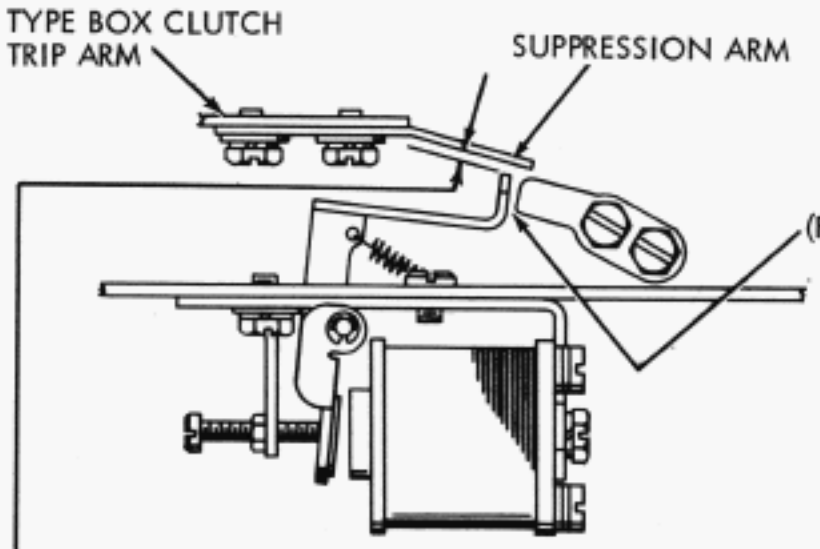

(C) BLOCKING BAIL

SEE FIGURE 2-29.

(F) BLOCKING BAIL EXTENSION CLEARANCE

REQUIREMENT

THERE SHOULD BE NO INTERFERENCE BETWEEN ARMATURE EXTENSION AND BLOCKING BAIL EXTENSION.

TO ADJUST

REFINE ABOVE ADJUSTMENTS AS NECESSARY.

(E) ARMATURE EXTENSION CLEARANCE

REQUIREMENT

CLEARANCE BETWEEN END OF ARMATURE EXTENSION AND SUPPRESSION ARM SHOULD BE MIN. 0.012 INCH --- MAX. 0.030 INCH

TO CHECK

ARMATURE RELEASED

TO ADJUST

POSITION ARMATURE WITH ARMATURE STOP SCREW. RECHECK (D).

FIGURE 2-79. TYPING UNIT, D.C. MAGNET OPERATED PRINT SUPPRESSION MECHANISM

33. PRINT SUPPRESSION AND OFF LINE STUNT SHIFT CONTROL MECHANISM

(A) SUPPRESSION CODE BAR POSITION

REQUIREMENT

NOTCHES IN SUPPRESSION CODE BAR SHOULD ALIGN WITH NOTCHES IN OTHER CODE BARS. VIEW FROM REAR OF UNIT ABOVE STUNT BOX. GAGE BY EYE.

TO CHECK

ENERGIZE THE PRINT SUPPRESSION MAGNET AND PLACE ALL CODE BARS IN SPACING POSITION.

TO ADJUST

OPERATE MAGNET ARMATURE MANUALLY OR ELECTRICALLY. PLACE ALL CODE BARS IN SPACING POSITION. PIVOT THE ARMATURE EXTENSION IN ITS ELONGATED MOUNTING HOLE WITH THE MOUNTING SCREWS LOOSENED.

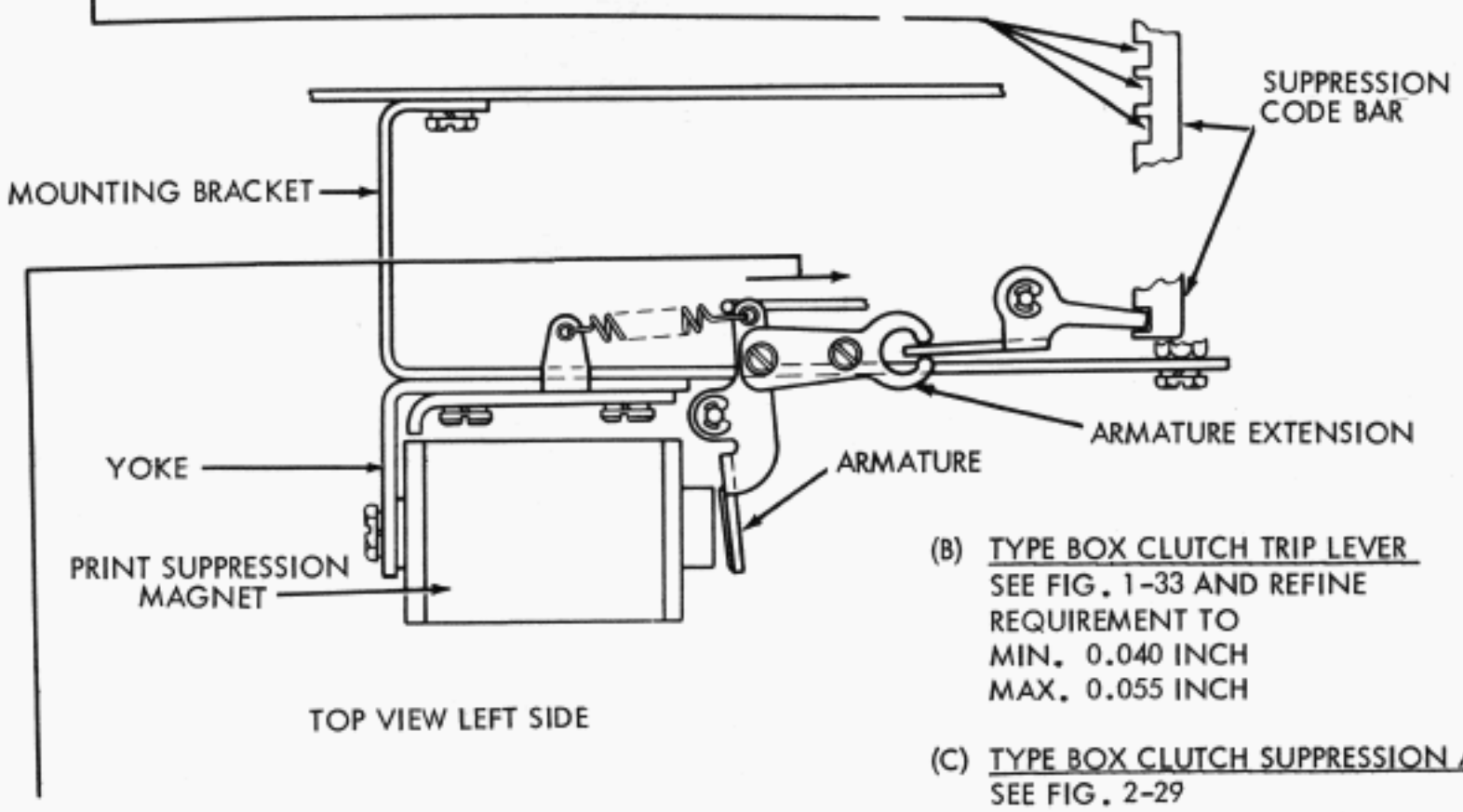

TOP VIEW LEFT SIDE

(B) TYPE BOX CLUTCH TRIP LEVER

SEE FIG. 1-33 AND REFINE REQUIREMENT TO

MIN. 0.040 INCH

MAX. 0.055 INCH

(C) TYPE BOX CLUTCH SUPPRESSION ARM

SEE FIG. 2-29

(D) BLOCKING BAIL

SEE FIG. 2-29

(E) PRINT SUPPRESSION MAGNET ARMATURE RETURN SPRING

REQUIREMENT

MIN. 7 OZS.

MAX. 10 1/2 OZS.

TO START MAGNET ARMATURE MOVING TOWARD CORE

TO CHECK

PRINT SUPPRESSION MAGNET UNOPERATED

NOTE: KEEP POLE FACE FREE OF OIL AND GREASE.

FIGURE 2-80. TYPING UNIT, PRINT SUPPRESSION AND OFF LINE STUNT SHIFT CONTROL MECHANISM

34. LETTERS-FIGURES CODE BAR SHIFT MAGNET MECHANISM

(A) SHIFT MAGNET YOKE

REQUIREMENT

CLEARANCE BETWEEN ARMATURE AND END OF HEELPIECE SHOULD BE MIN. SOME --- MAX. 0.003 INCH

TO CHECK

MAGNET ARMATURE HELD AGAINST CORE. CHECK CLEARANCE ACROSS END OF HEELPIECE

TO ADJUST

POSITION YOKE WITH ITS CLAMP SCREW LOOSENED.

NOTE: KEEP POLE FACE FREE OF OIL AND GREASE.

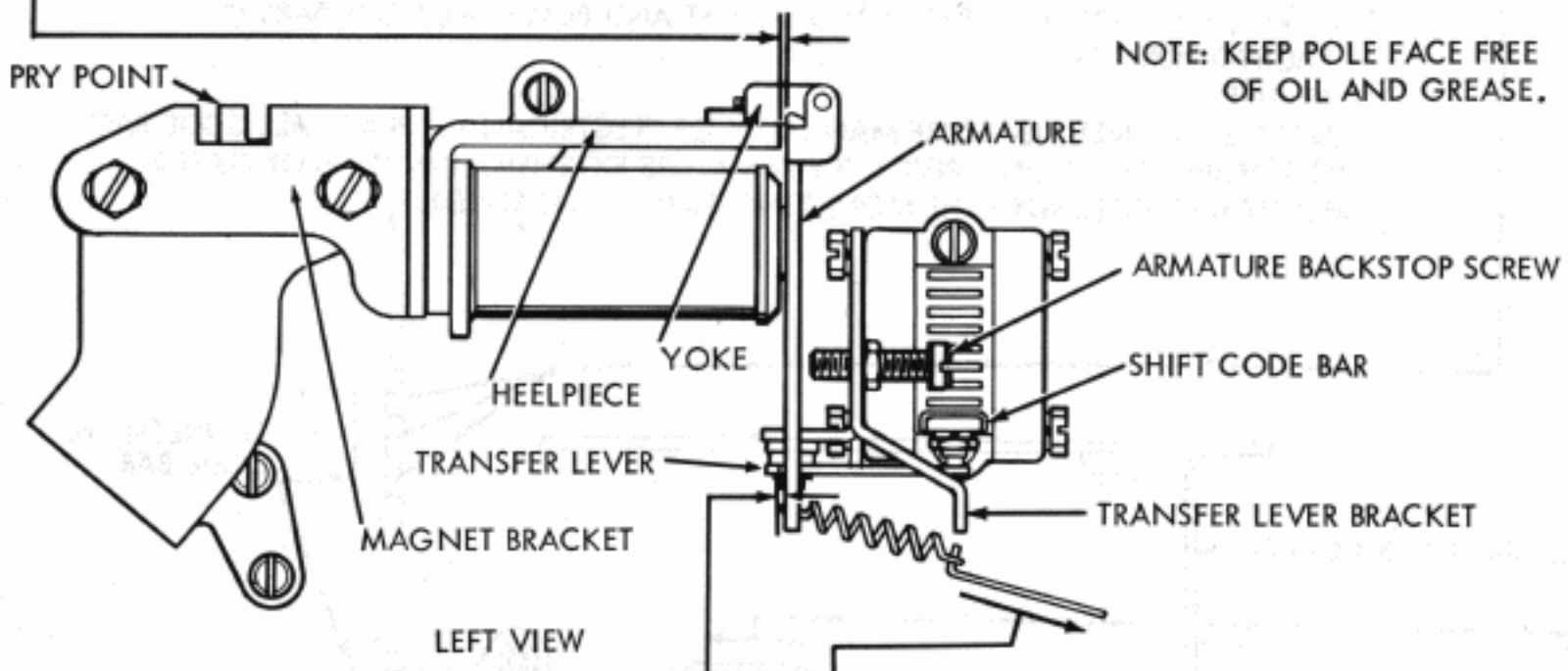

(B) SHIFT MAGNET ARMATURE

REQUIREMENT

1. CLEARANCE BETWEEN ARMATURE AND TRANSFER LEVER SHOULD BE MIN. SOME --- MAX. 0.005 INCH

TO CHECK

MAGNET ARMATURE ATTRACTED. SHIFT CODE BAR IN FULL MARKING POSITION.

TO ADJUST

POSITION MAGNET FORWARD OR BACKWARD WITH BRACKET MOUNTING SCREWS LOOSENED.

2. CLEARANCE BETWEEN ARMATURE AND TRANSFER LEVER SHOULD BE MIN. SOME --- MAX. 0.010 INCH

TO CHECK

MAGNET ARMATURE UNOPERATED. SHIFT CODE BAR IN FULL SPACING POSITION.

TO ADJUST

POSITION ARMATURE BACKSTOP SCREW WITH LOCK NUT LOOSENED.

(C) SHIFT MAGNET ARMATURE RETURN

REQUIREMENT

MIN. 1 OZ. --- MAX. 3 OZS.
TO PULL SPRING TO INSTALLED LENGTH

(D) SHIFT CODE BAR RETURN

REQUIREMENT

MIN. 3 OZS. --- MAX. 7 OZS.
TO START CODE BAR MOVING

TO CHECK

TRIP TYPE BOX CLUTCH, ROTATE MAIN SHAFT UNTIL PRINTING TRACK IS IN LOWEST POSITION

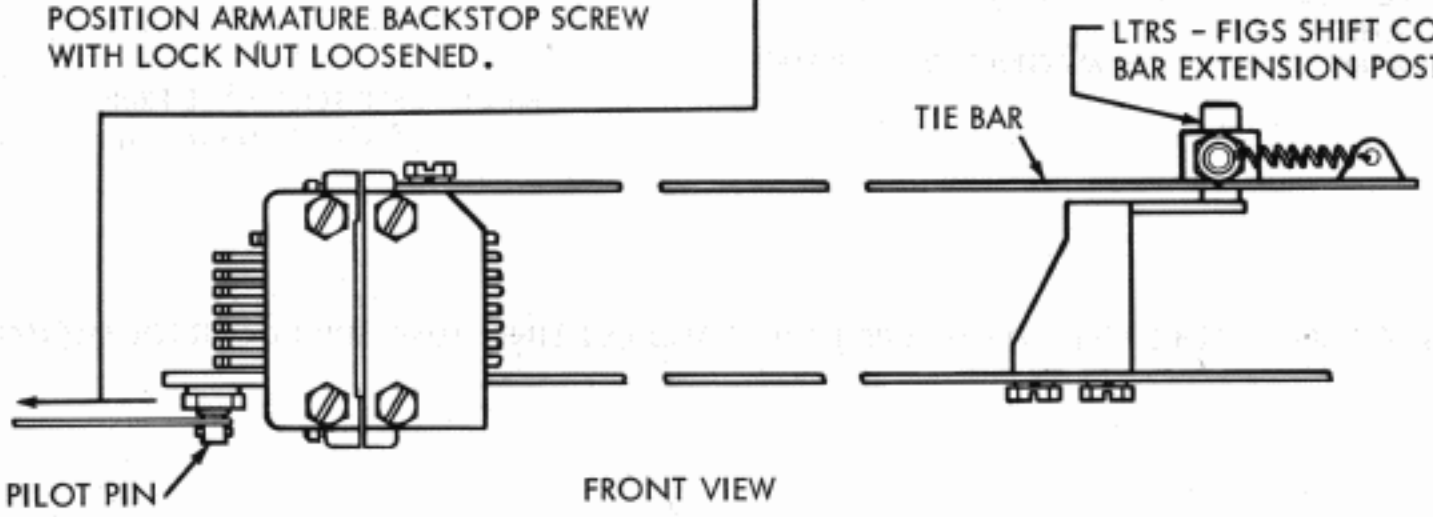

FIGURE 2-81. TYPING UNIT, LETTERS-FIGURES CODE BAR SHIFT MAGNET MECHANISM

35. FORM FEED-OUT MECHANISM

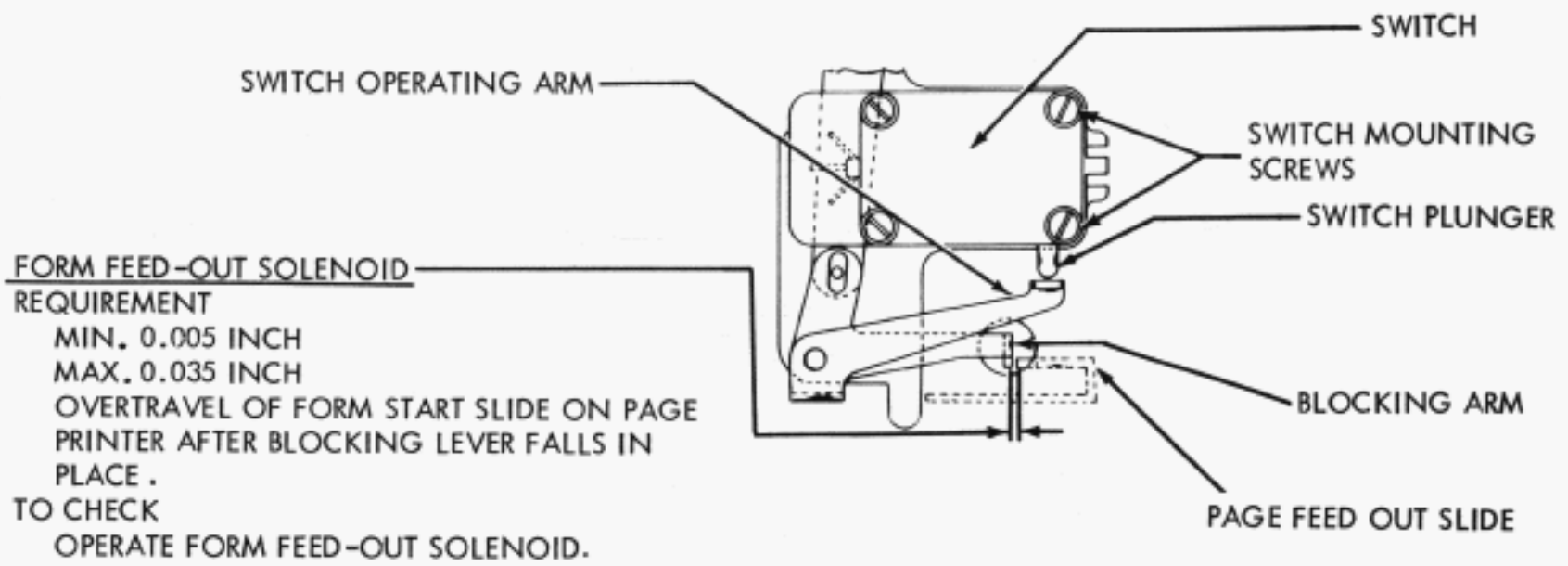

FORM FEED-OUT SOLENOID

REQUIREMENT

MIN. 0.005 INCH
MAX. 0.035 INCH
OVERTRAVEL OF FORM START SLIDE ON PAGE PRINTER AFTER BLOCKING LEVER FALLS IN PLACE.

TO CHECK

OPERATE FORM FEED-OUT SOLENOID.

TO ADJUST

POSITION FORM FEED-OUT SOLENOID ASSEMBLY WITH ITS MOUNTING SCREWS LOOSENED. (SEE FIGURE BELOW)

SOLENOID SPRING TENSION

REQUIREMENT

MIN. 1/2 OZ.
MAX. 2 OZS.
TO PUSH SOLENOID PLUNGER ALL THE WAY INTO THE SOLENOID.

FORM FEED-OUT LINK SPRING TENSION

REQUIREMENT

MIN. 3-1/2 OZ.
MAX. 6-1/2 OZ.
TO START FORM FEED-OUT LINK MOVING.

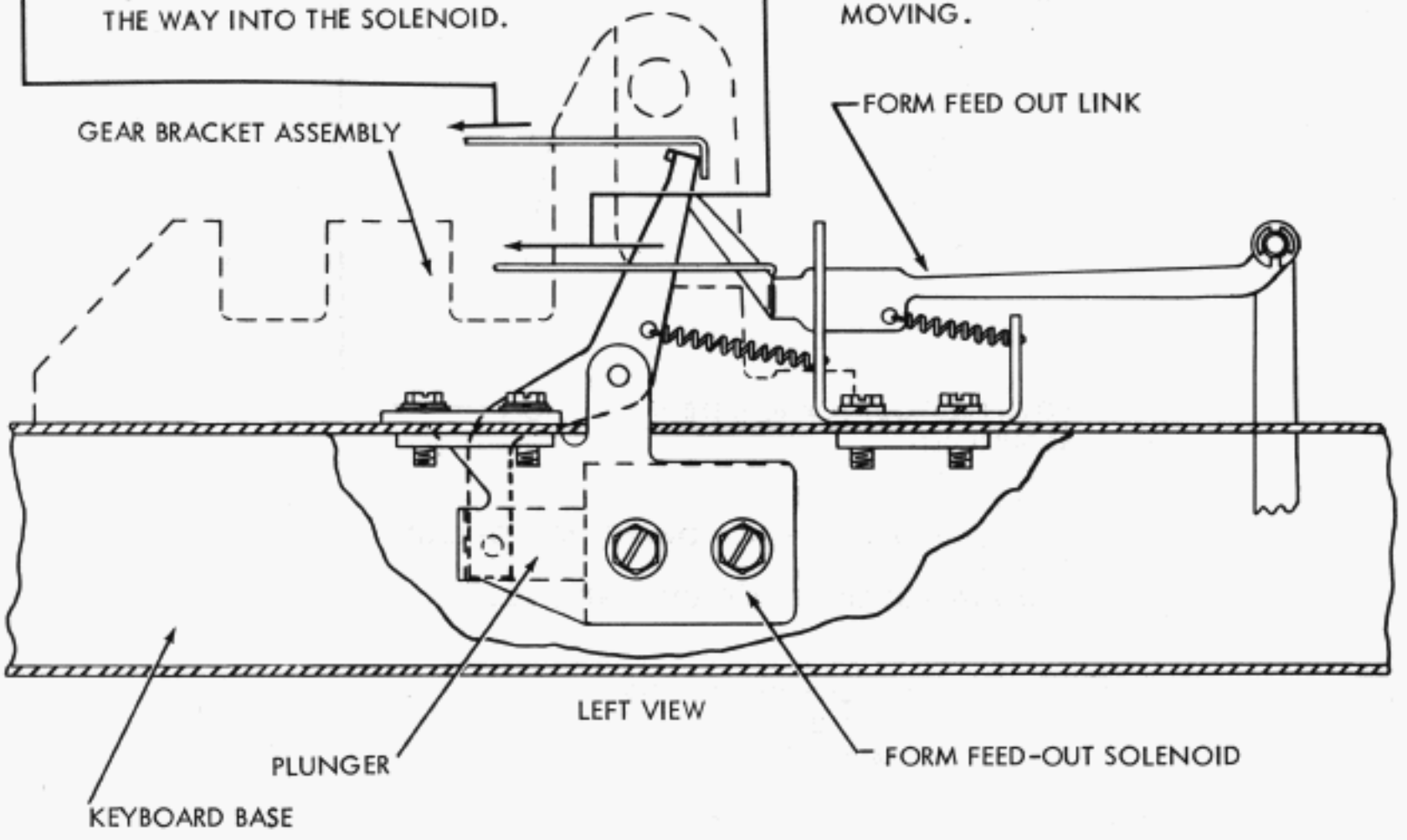

FIGURE 2-82. KEYBOARD, FORM FEED-OUT MECHANISM

35. FORM FEED-OUT MECHANISM

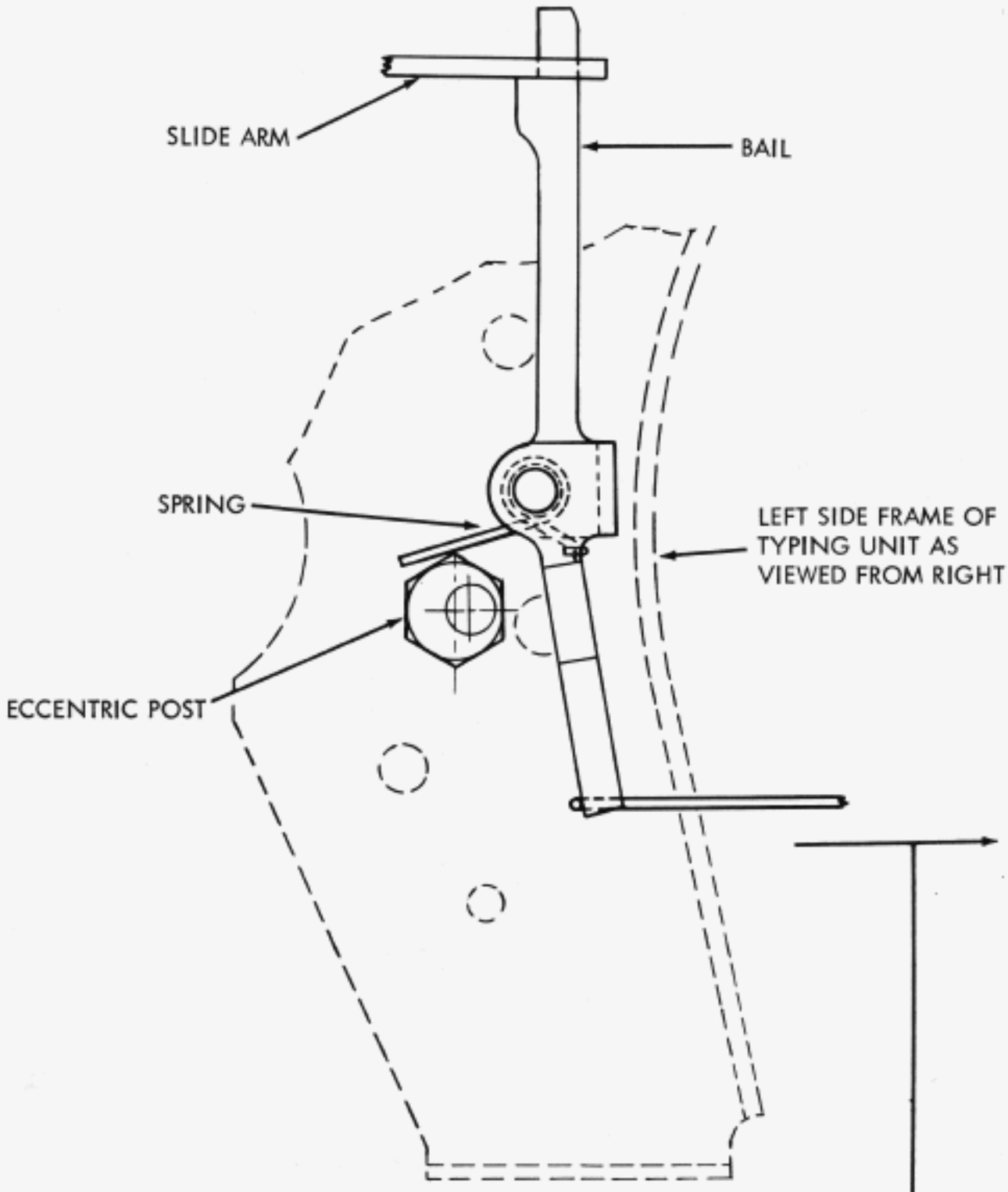

FORM FEED-OUT TORSION SPRING TENSION

REQUIREMENT *
MIN. 1/8 OZ.
MAX. 1-1/4 OZ.
TO START BAIL MOVING TOWARDS REAR OF UNIT.

TO CHECK
DISENGAGE LINE FEED CLUTCH TRIP LEVER.

*RECEIVE ONLY UNITS
MIN 2 OZS
MAX 6 OZS

FIGURE 2-83. TYPING UNIT, FORM FEED-OUT MECHANISM

36. TWO COLOR RIBBON

SEE NOTES 1 THROUGH 5 ON OPPOSITE PAGE

(A) RIBBON MAGNET HINGE BRACKET (LEFT AND RIGHT) (PRELIMINARY)
REQUIREMENT --- MAGNET ENERGIZED OR IN ATTRACTED POSITION, ARMATURE ON POLE PIECE. CLEARANCE BETWEEN ARMATURE AND POLE PIECE SHOULD BE NOT MORE THAN .005 INCH.
TO ADJUST --- POSITION HINGE BRACKET WITH MOUNTING SCREWS LOOSENED.

(B) RIBBON MAGNET BRACKET (LEFT AND RIGHT) (PRELIMINARY)
REQUIREMENT --- ADJUSTING SCREW IN LOWEST POSITION, ALL CLUTCHES DISENGAGED, POSITION RIBBON MAGNET BRACKET AS FOLLOWS:
1. HOLD MAGNET ARMATURE STOP LEVER AGAINST MAGNET CORE, LEVER SHOULD BE PARALLEL TO OSCILLATING LEVER TOP SURFACE AND ENGAGE THE OSCILLATING LEVER BY AT LEAST 1/2 OF THE STOP LEVER THICKNESS. GAUGE BY EYE.
2. STOP LEVER HELD AGAINST MAGNET CORE. CLEARANCE BETWEEN STOP LEVER AND OSCILLATING LEVER SHOULD BE: MIN. 0.005 INCH --- MAX. 0.020 INCH.

TO ADJUST --- LOOSEN AND POSITION RIBBON MAGNET BRACKET TO MEET ABOVE REQUIREMENTS.

(C) RIBBON MAGNET HINGE BRACKET (LEFT AND RIGHT) (FINAL)
REQUIREMENT --- MAGNET DE-ENERGIZED OR IN RELEASED POSITION, ROTATE MAIN SHAFT UNTIL OSCILLATING LEVER IS FULLY UNDER STOP LEVER. CLEARANCE BETWEEN OSCILLATING AND STOP LEVER SHOULD BE: MIN. 0.020 INCH --- MAX. 0.040 INCH.
TO ADJUST --- POSITION STOP LEVER ADJUSTING SCREW WITH LOCK NUT LOOSENED.

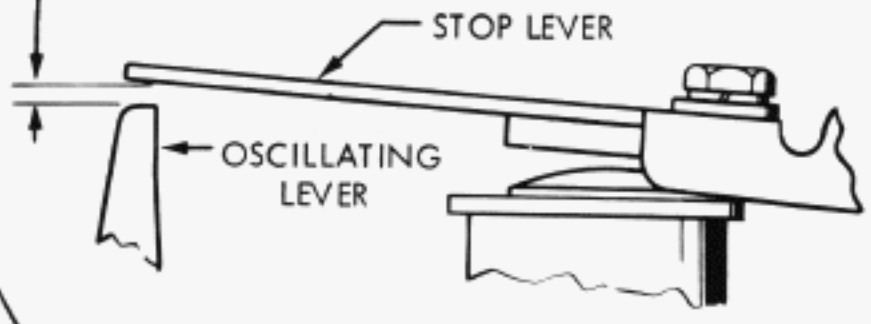

ARMATURE SPRING TENSION (LEFT AND RIGHT)
REQUIREMENT --- MIN. 2 OZS -- MAX 4 OZS. TO SEAT ARMATURE AGAINST POLE PIECE.

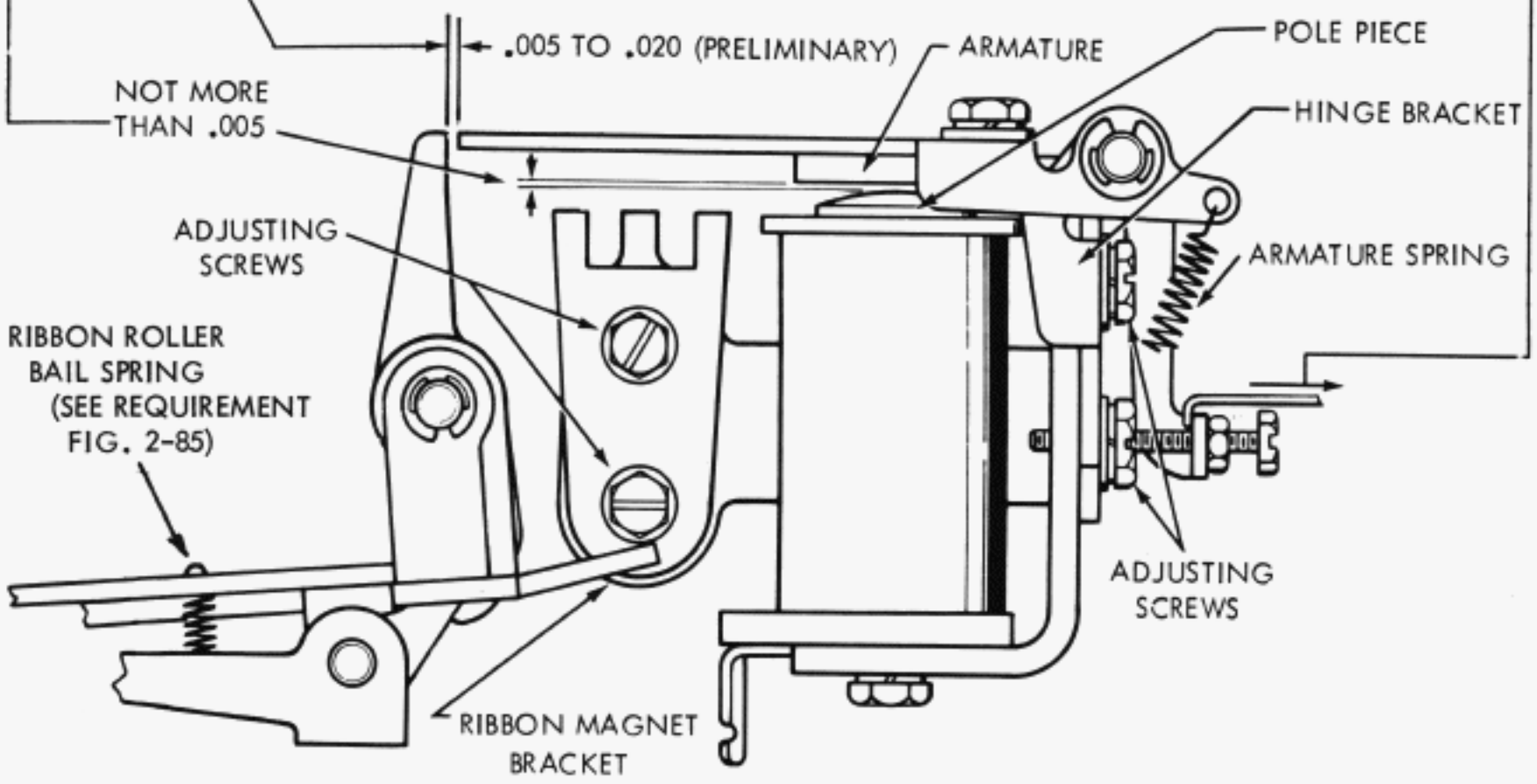

FIGURE 2-84 TYPING UNIT, TWO COLOR RIBBON MECHANISM, END VIEW

36. TWO COLOR RIBBON

OPERATIONAL REQUIREMENT - RIBBON MANGET BRACKET (FINAL) (SEE PRECEDING FIGURE)
PRINTER OPERATING AT 60, 75, OR 100 WPM, TEST BEING PRINTED.

REQUIREMENT
PRINTS RED WHEN RIBBON MAGNETS ARE ENERGIZED.

TO ADJUST
TURN LEFT AND RIGHT RIBBON BRACKET ROLLER BAIL ADJUSTING SCREWS 1/2 TURN UP. REFINE RIBBON AND RIBBON HINGE BRACKET ADJUSTMENTS.
REPEAT ABOVE PROCEDURE IF BLACK IS PRINTED.

RIBBON ROLLER BAIL SPRING TENSION (LEFT AND RIGHT) (SEE PRECEDING FIGURE)
REQUIREMENT
ALL CLUTCHES DISENGAGED, ADJUSTING SCREW IN LOWEST POSITION
MIN. 4 OZS. --- MAX. 6 OZS.
TO START LIFTER BAIL MOVING.

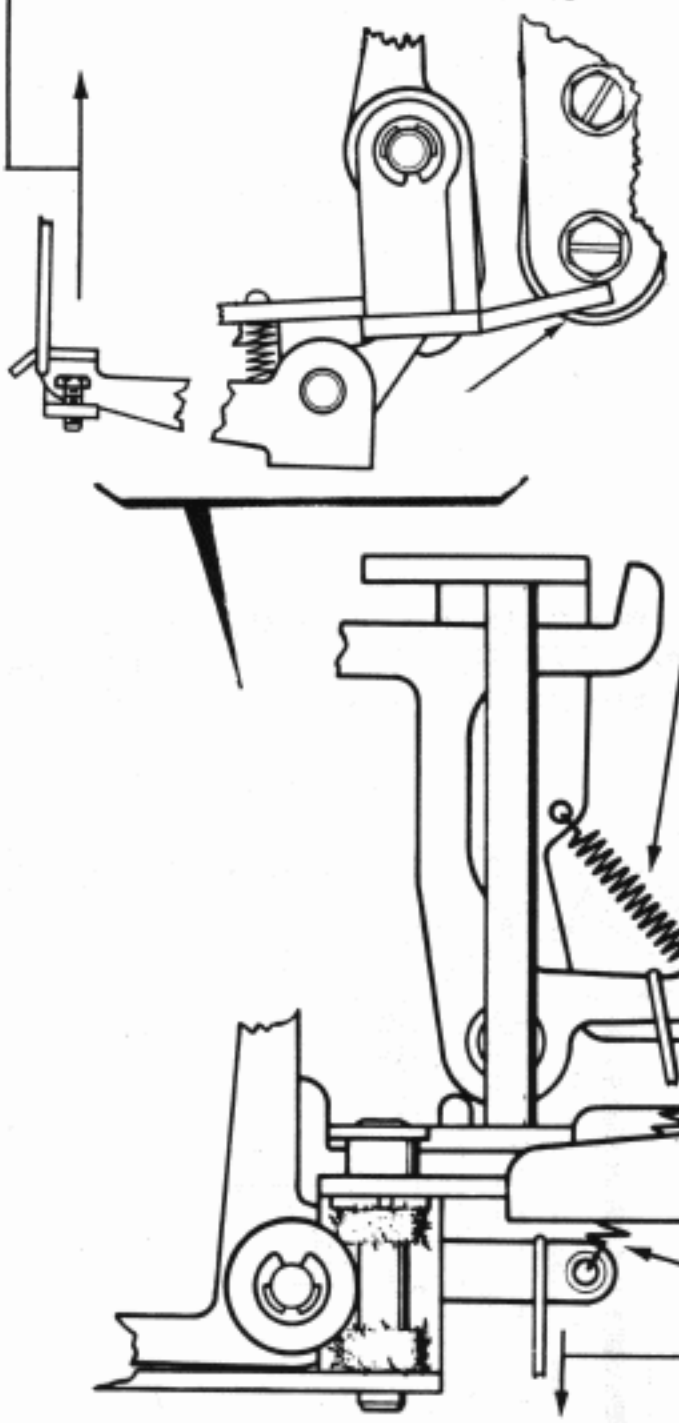

NOTES

REFER TO RELATED REQUIREMENTS
1. VERTICAL POSITION LOCK LEVER EXTENSION - PAGE 1-49
2. RIBBON REVERSE SPUR GEAR - PAGE 1-64
3. RIBBON REVERSE DETENT - PAGE 1-64
4. RIBBON FEED LEVER BRACKET - PAGE 1-65
5. RIBBON RATCHET WHEEL FRICTION SPRING - PAGE 1-65 (MIN 3-1/3 OZS --- MAX 4-1/2 OZS).

RIBBON REVERSING LEVER SPRING TENSION (LEFT AND RIGHT)
REQUIREMENT
MIN. 1/2 OZ --- MAX. 1-1/2 OZS.
TO START LEVER MOVING.

RIBBON GUIDE LEVER SPRING TENSION (LEFT AND RIGHT)
REQUIREMENT
MIN. 1 OZ --- MAX. 2 OZS
TO START LEVER MOVING.

FIGURE 2-85 TYPING UNIT, TWO COLOR RIBBON MECHANISM, TOP VIEW

37. SYNCHRONOUS PULSE MECHANISM

MOUNTING BRACKET

TO CHECK

WITH MAGNET NOT ATTRACTED AND CLUTCH TRIP BAR IN FURTHEST LEFT POSITION.

REQUIREMENT

MIN. 0.005 INCH --- MAX. 0.015 INCH BETWEEN CLUTCH TRIP BAR AND ARMATURE LEVER.

TO ADJUST

POSITION MOUNTING BRACKET WITH THREE MOUNTING SCREWS LOOSE BY MEANS OF PRY POINT.

NOTE

TIGHTEN REAR LEFT MOUNTING SCREW AND MAKE MOUNTING BRACKET ADJUSTMENT

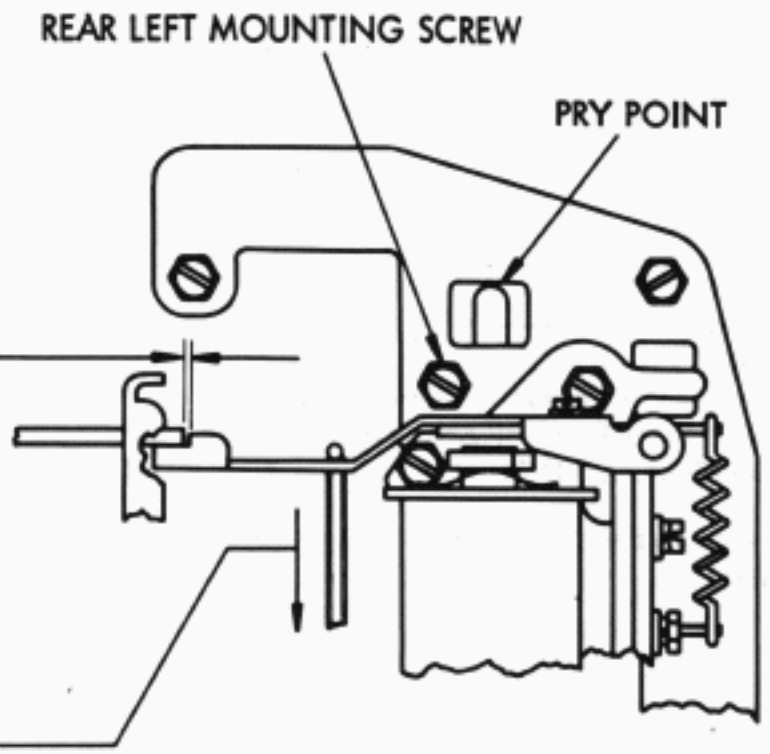

MAGNET ARMATURE

TO CHECK

CLUTCH TRIP BAR IN EXTREME LEFT POSITION. HOOK 32 OZ. SCALE TO ARMATURE LEVER AS SHOWN. MEASURE AT RIGHT ANGLE TO ARMATURE LEVER AS INDICATED.

REQUIREMENT

MIN. 3 OZS. --- MAX. 5 OZS. TO PULL ARMATURE LEVER FROM CLUTCH TRIP BAR.

ARMATURE HINGE

REQUIREMENT

WITH ARMATURE IN ATTRACTED POSITION ARMATURE FLUSH WITH POLE FACE AND MAGNET BRACKET EXTENSION.

TO ADJUST

POSITION ARMATURE WITH HINGE BRACKET MOUNTING SCREW AND SPRING POST LOOSE.

MOUNTING BRACKET

TO CHECK

WITH ARMATURE LEVER HELD AGAINST MAGNET POLE FACE AND CLUTCH TRIP BAR IN FURTHEST RIGHT POSITION.

REQUIREMENT

MIN. 0.005 INCH --- MAX. 0.015 INCH BETWEEN CLUTCH TRIP BAR AND ARMATURE LEVER.

TO ADJUST

WITH RIGHT REAR AND LEFT FRONT MOUNTING BRACKET SCREWS LOOSE POSITION MOUNTING BRACKET BY MEANS OF PRY POINT.

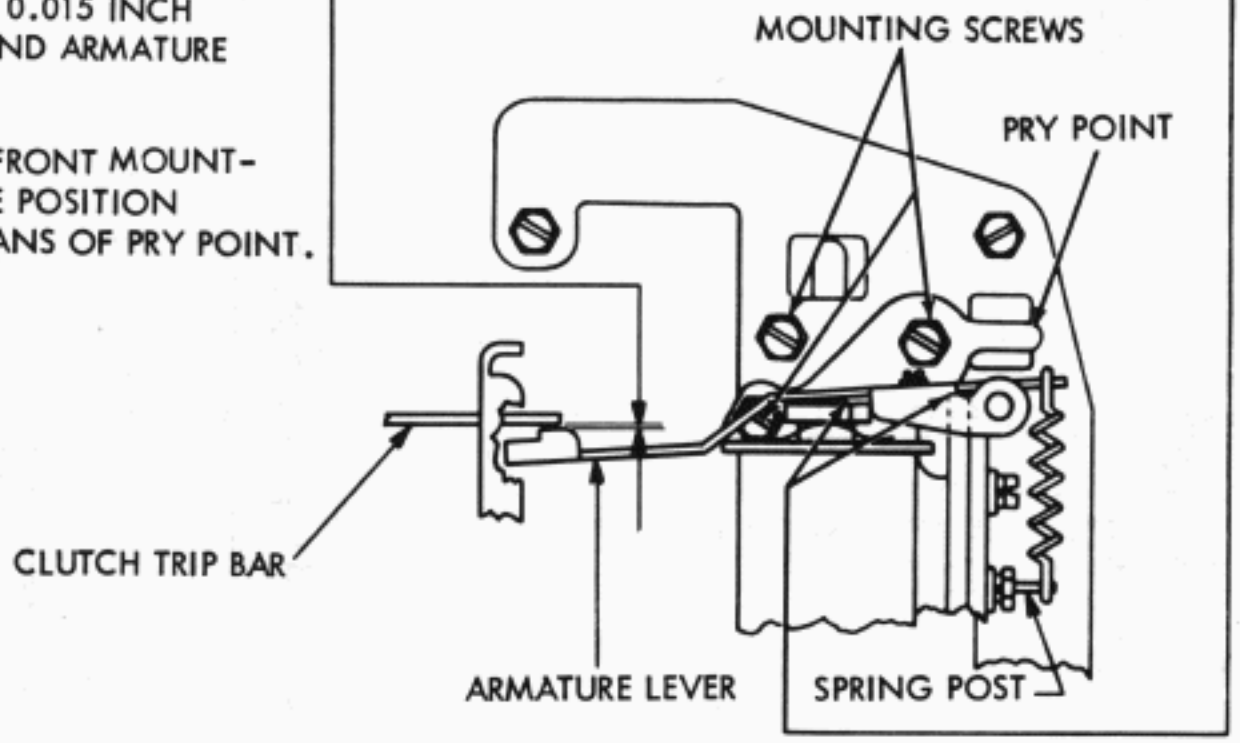

FIGURE 2-86. SYNCHRONOUS PULSE MECHANISM

37. SYNCHRONOUS PULSE MECHANISM

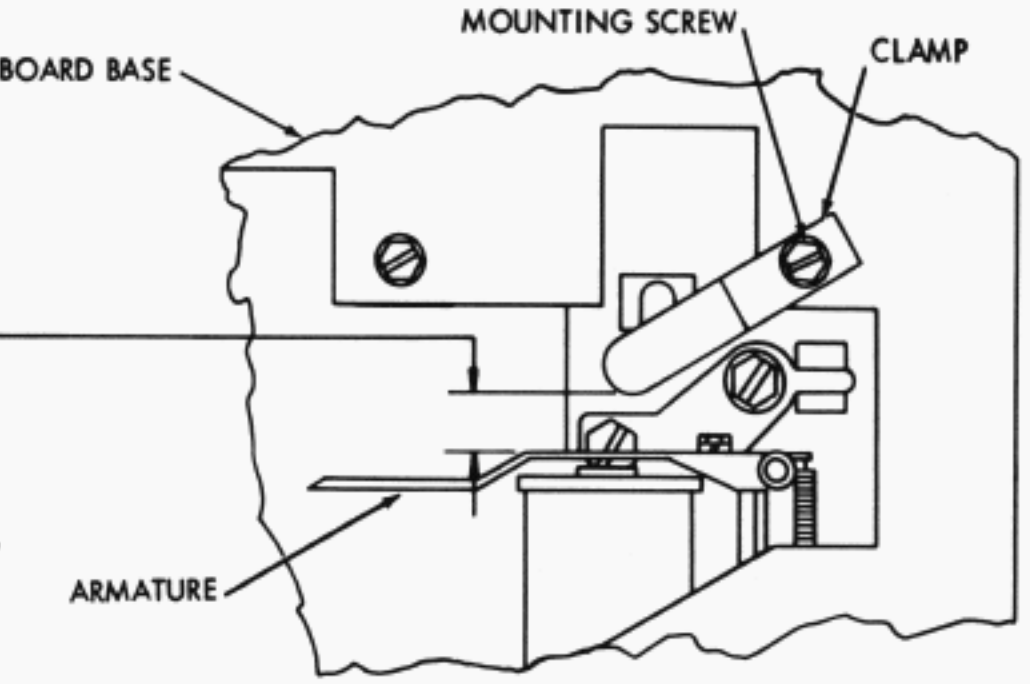

ARMATURE CLAMP

REQUIREMENT

WITH ARMATURE OPERATED, CLEARANCE BETWEEN ARMATURE CLAMP AND ARMATURE APPROX. 3/8 INCH

TO ADJUST

POSITION CLAMP WITH ITS MOUNTING SCREW LOOSENED.

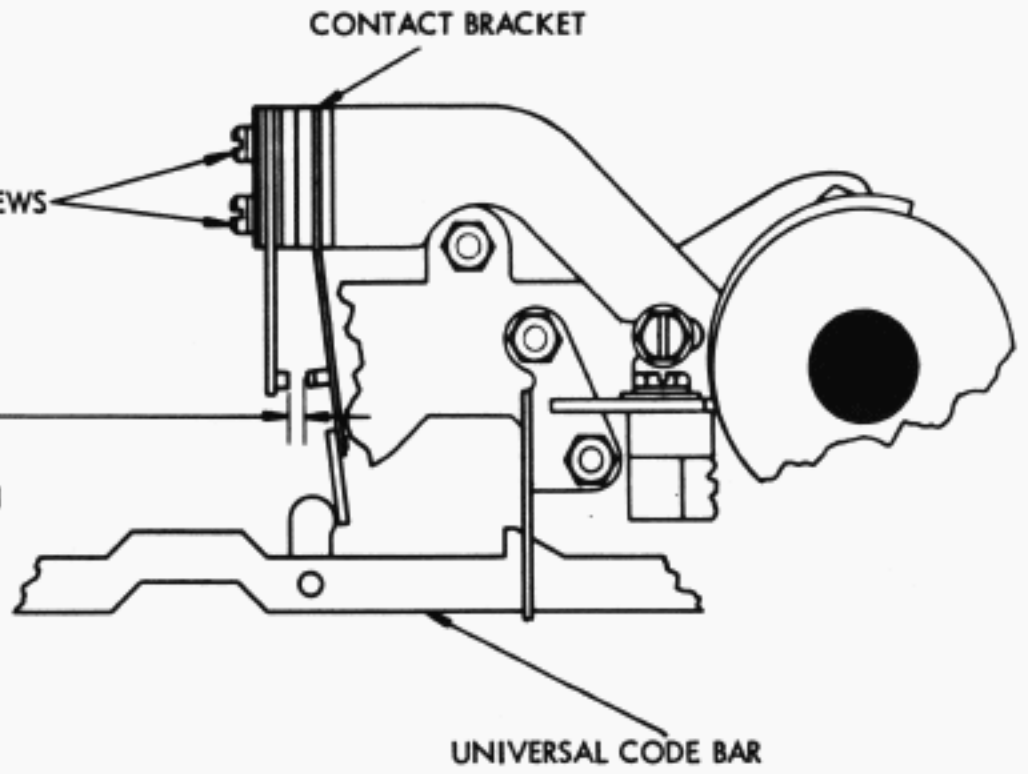

CONTACT GAP

REQUIREMENT

WITH UNIVERSAL CODE BAR IN STOP POSITION (TO RIGHT AS VIEWED FROM REAR) CONTACT GAP SHOULD BE MIN. 0.020 INCH --- MAX. 0.035 INCH

TO ADJUST

POSITION CONTACT MOUNTING BRACKET WITH MOUNTING SCREWS LOOSE.

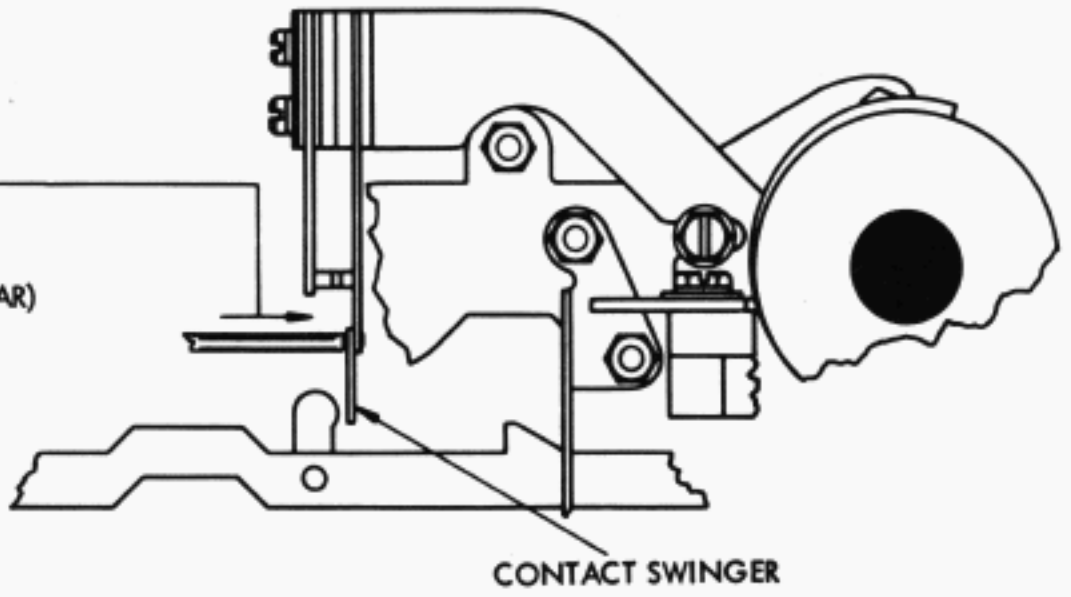

UNIVERSAL CODE BAR CONTACT

REQUIREMENT

WITH UNIVERSAL CODE BAR IN OPERATED POSITION (TO THE LEFT AS VIEWED FROM REAR) MIN. 3-1/2 OZS. --- MAX. 4-1/2 OZS. TO OPEN CONTACTS.

TO ADJUST

BEND CONTACT SWINGER.

FIGURE 2-87. SYNCHRONOUS PULSE MECHANISM

SECTION 3 - LUBRICATION

1. GENERAL

1.01 The printer set should be lubricated as directed in this section. The figures indicate points to be lubricated and the kind and quantity of lubricant to be used. Lubricate the printer just prior to placing it in service. After a few weeks in service, re-lubricate to make certain that all points receive lubrication. The following lubrication schedule should be followed thereafter.

OPERATING SPEED (Words per Minute	LUBRICATING INTERVAL (Whichever occurs first)
60	3000 hrs. or 1 yr.
75	2400 hrs. or 9 mo.
100	1500 hrs. or 6 mo.

1.02 Use Teletype KS-7470 oil at all locations where the use of oil is indicated. Use KS-7471 grease on all surfaces where grease is indicated except certain bearings.* Apply six drops of KS-7470 oil to motor bearings every four months (depress oiler with metal object). If the motor is disassembled at any time, repack the bearings with Beacon #325 grease.

1.03 All spring wicks and felt oilers should be saturated. The friction surfaces of all moving parts should be thoroughly lubricated. Overlubrication should be avoided. Special care must be taken to prevent any oil or grease from getting between the selector armature and its magnet pole faces. Keep all electrical contacts free of oil and grease.

*Ball bearings used in high temperature areas and having one side unshielded. Use Beacon #325 grease.

1.04 Apply a thick film of grease to all gears and the spacing clutch reset cam plate.

1.05 Apply oil to all cams, including the camming surfaces of each clutch disk.

1.06 The photographs show the paragraph numbers referring to particular line drawings of mechanisms and where these mechanisms are located on the unit. Parts in the line drawings are shown in an upright position unless otherwise specified.

1.07 The illustration symbols indicate the following lubrication directions:

0	Apply 1 drop of oil.
02	Apply 2 drops of oil.
03	Apply 3 drops of oil.
020	Apply 20 drops of oil, etc.
G	Apply thin film of grease.
SAT	Saturate (Felt oilers, washer, wicks) with oil.

NOTE: During each lubrication period, check the following adjustments:

1. PRINTING CARRIAGE POSITION
2. PRINTING HAMMER BEARING STUD
3. PRINTING HAMMER STOP BRACKET

(Also see note after "Printing Arm" adjustment)

4. LOWER DRAW WIRE ROPE
5. DASHPOT VENT SCREW

(Check Dashpot Transfer Slide for freeness.)

6. PRINTING HAMMER OPERATING BAIL SPRING BRACKET POSITION
7. PRINTING TRACK

2. DISASSEMBLY

2.01 CABINET DISASSEMBLY

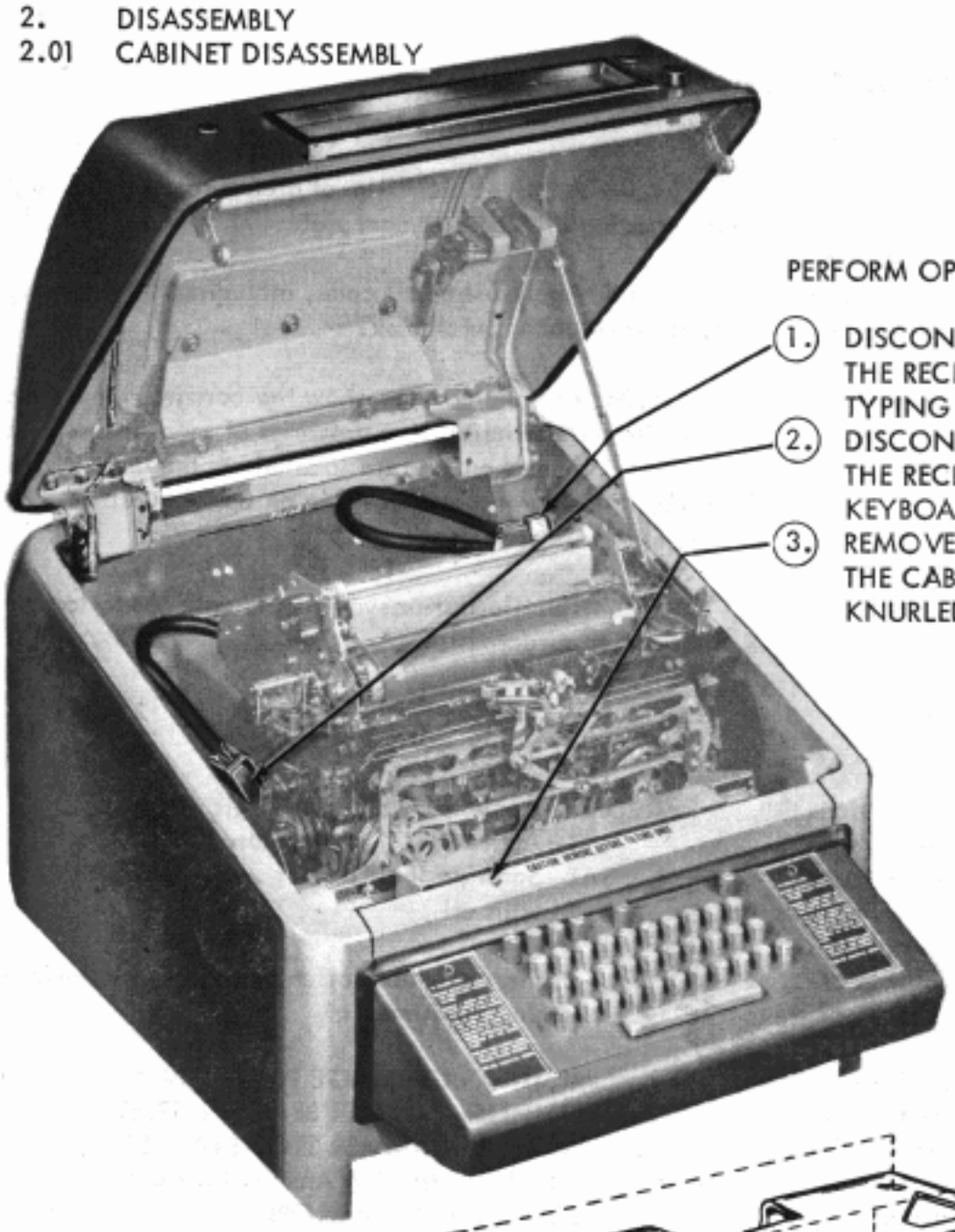

PERFORM OPERATION IN NUMERICAL SEQUENCE

1. DISCONNECT THE PLUG ON THE CABLE FROM THE RECEPTACLE ON THE RIGHT SIDE OF THE TYPING UNIT.
2. DISCONNECT THE PLUG ON THE CABLE FROM THE RECEPTACLE ON THE LEFT SIDE OF THE KEYBOARD.
3. REMOVE THE CROSS BAR FROM THE FRONT OF THE CABINET BY LOOSENING THE TWO KNURLED THUMB SCREWS.

2.02 BASE DISASSEMBLY

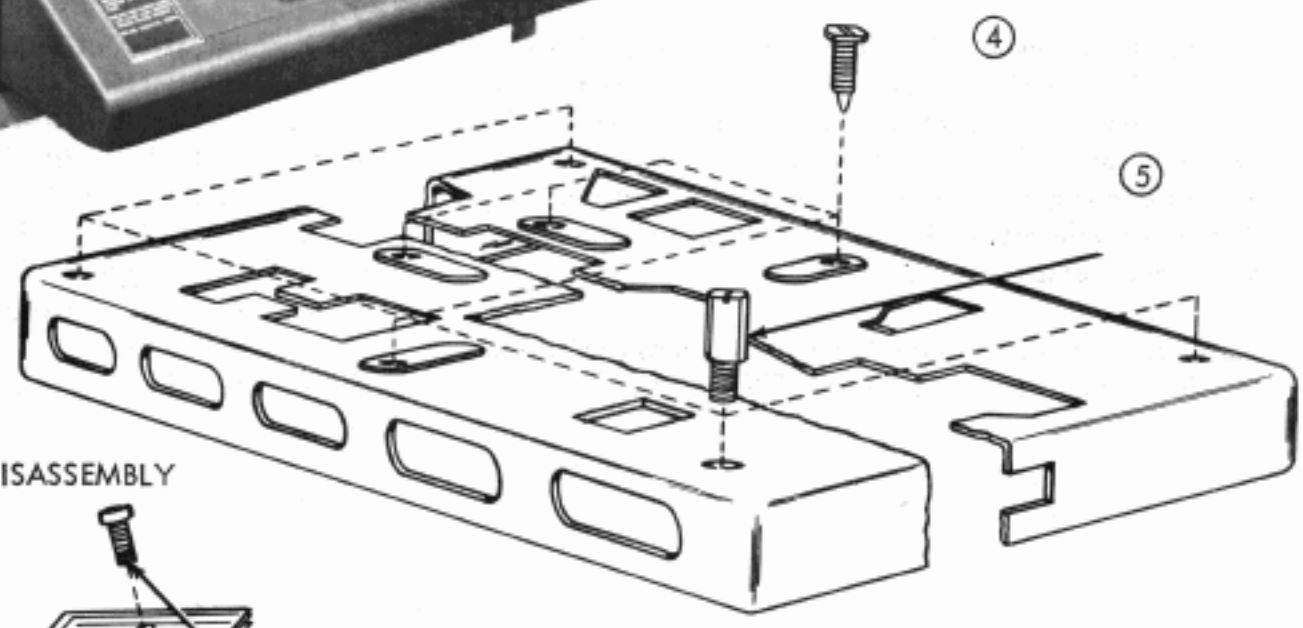

2.03 KEYLEVER COVER DISASSEMBLY

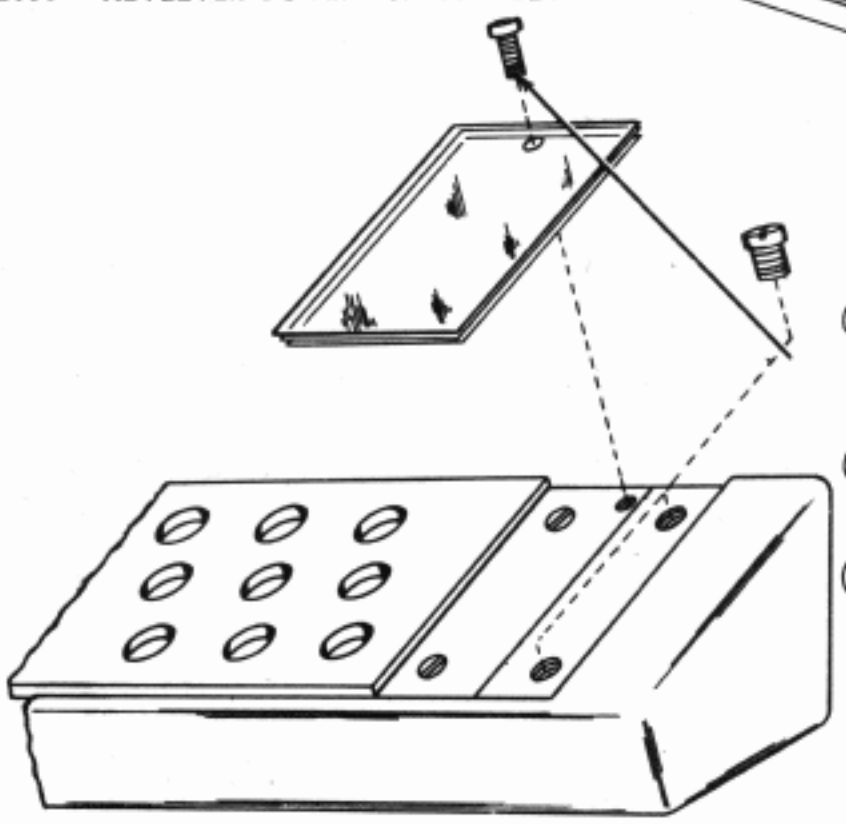

4. REMOVE THE FOUR SCREWS HOLDING THE KEYBOARD TO THE CRADLE ASSEMBLY AND REMOVE THE KEYBOARD WITH TYPING UNIT ATTACHED.
5. REMOVE THE FOUR SCREWS HOLDING THE TYPING UNIT TO THE KEYBOARD AND REMOVE TYPING UNIT.
6. REMOVE THE SCREW HOLDING THE PLASTIC WINDOW (RIGHT AND LEFT) TO THE KEY-LEVER GUIDE PLATE. REMOVE THE TWO SCREWS HOLDING THE KEYLEVER COVER (RIGHT AND LEFT) AND REMOVE KEYLEVER COVER.

2.04 CABINET DISASSEMBLY (RACK MOUNTED - EARLIER DESIGN)

DISASSEMBLY

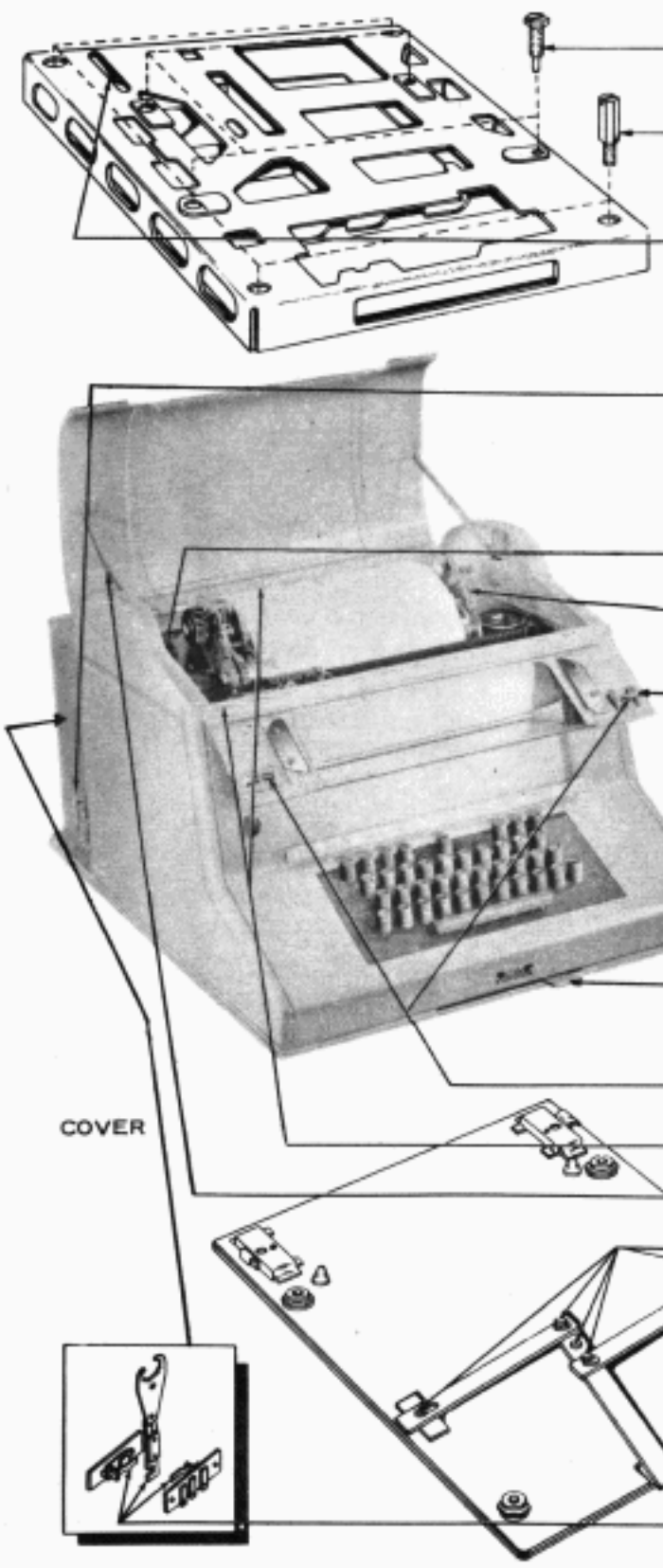

DISASSEMBLY; PERFORM OPERATIONS IN NUMERICAL SEQUENCE

6. REMOVE THE FOUR SCREWS THAT SECURE THE TYPER TO THE BASE.
8. ON THE KEYBOARD, REMOVE THE FOUR SCREWS AT EACH CORNER OF THE BASE ; SECURING THE BASE TO BASEPLATE.
9. DISCONNECT THE PLUG FROM IT'S RECEPTACLE AT THE LEFT REAR CORNER OF THE BASE, AND LIFT THE KEYBOARD BASE FROM THE BASEPLATE
5. UNLATCH EACH SIDE OF POWER DISTRIBUTION PANEL COVER FROM IT'S CATCHES AND LIFT UPWARD FROM THE BASE.
3. DISCONNECT THE PLUG ON THE CABLE FROM THE RECEPTACLE IN THE LEFT REAR CORNER OF THE COVER.
7. DISCONNECT THE CABLE PLUG FROM THE RIGHT SIDE FRAME, AND LIFT TYPER FROM THE BASE.
2. MOVE THE TWO THUMB SCREWS INWARD AND RAISE THE COVER LIDS.
4. LIFT THE COVER FROM THE BASE PLATE CAREFULLY.
1. MOVE THE LOCKLEVER TO IT'S EXTREME LEFT POSITION.

G	ENGAGING SURFACES - THIN FILM (2 PLACES)	LID LATCHES
02	BEARING SURFACES EACH (2 HINGES)	FRONT AND REAR HINGES
0	BEARING SURFACES EACH (6 PLACES)	LID STOP ARMS
G	ENGAGING SURFACES - THIN FILM (5 PLACES)	BASEPLATE LOCK ARMS
G	ENGAGING SURFACES - THIN FILM	STOP MAGNET ARMATURE

3. CABINET

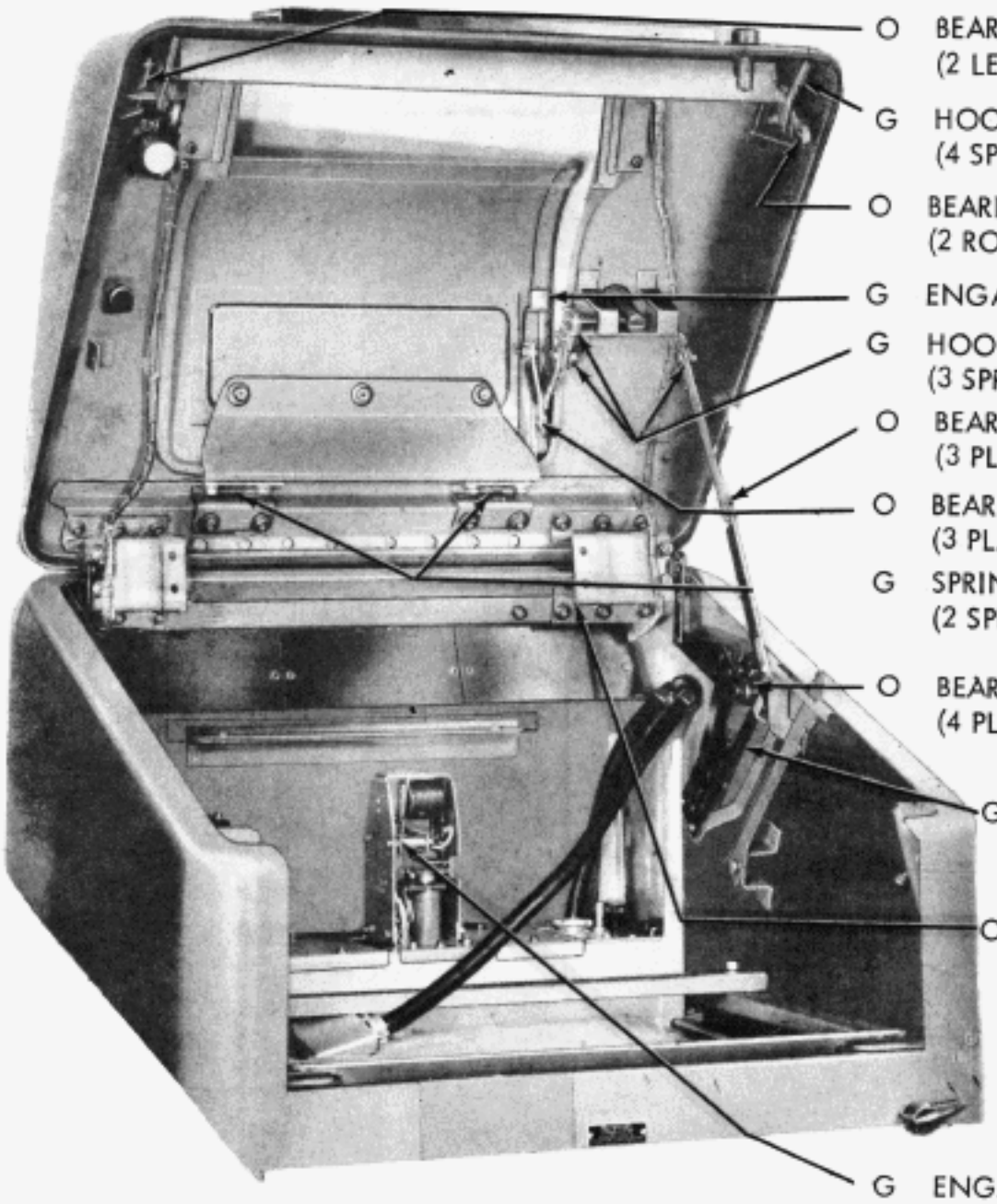

3.01 ELECTRICAL SERVICE UNIT

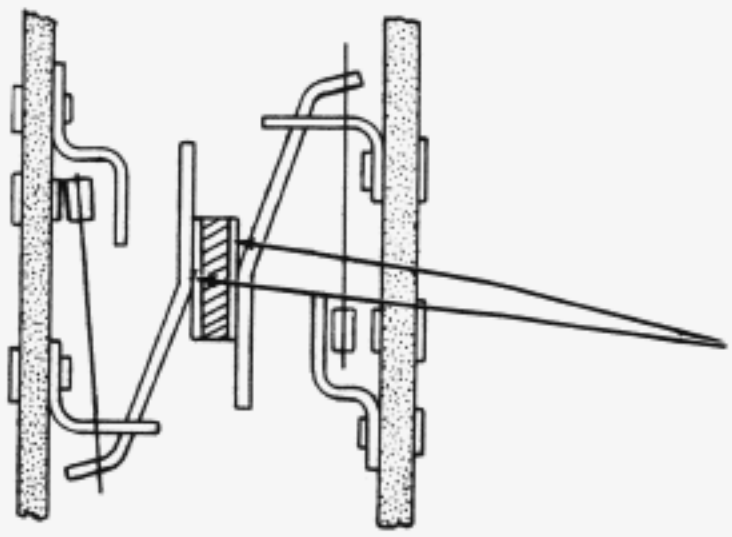

3.01A CABINET FOR WALL MOUNTED PRINTER

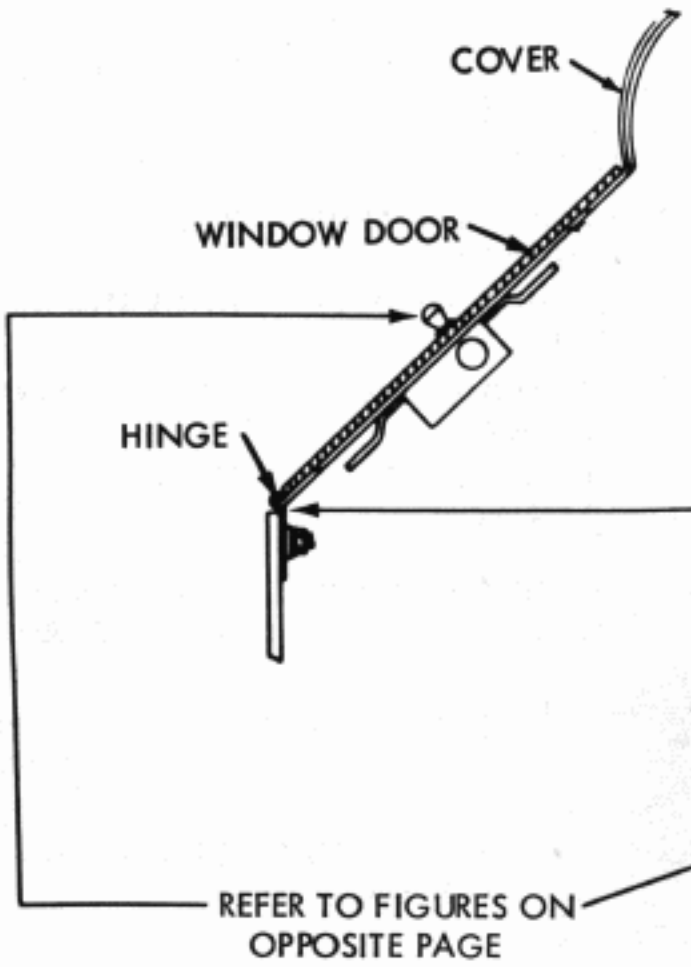

O2	DOOR HINGES	HINGES SURFACE
O2	LINE GUIDE	BOTH BUSHINGS
G	DOME LATCHES	LATCH SURFACE
G	SMALL DOOR LATCHES	LATCH SURFACE

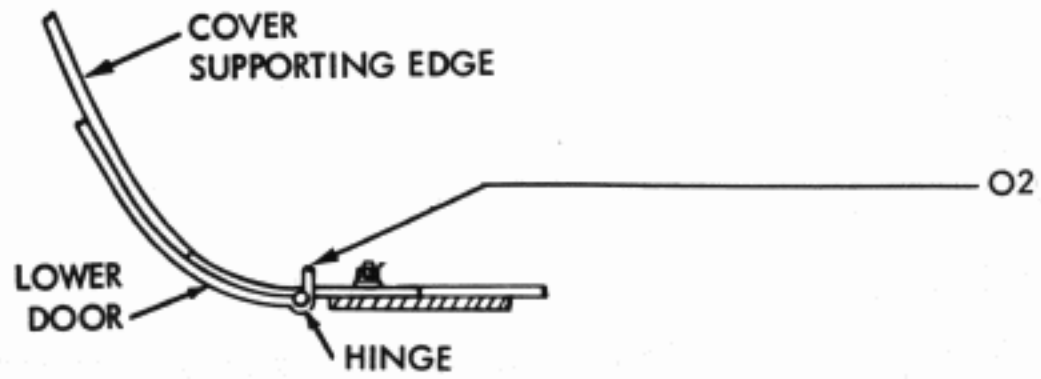

O2	LOWER DOOR HINGE	HINGE SURFACE

3.02 CABINET FOR MULTIPLE MOUNTED PAGE PRINTER

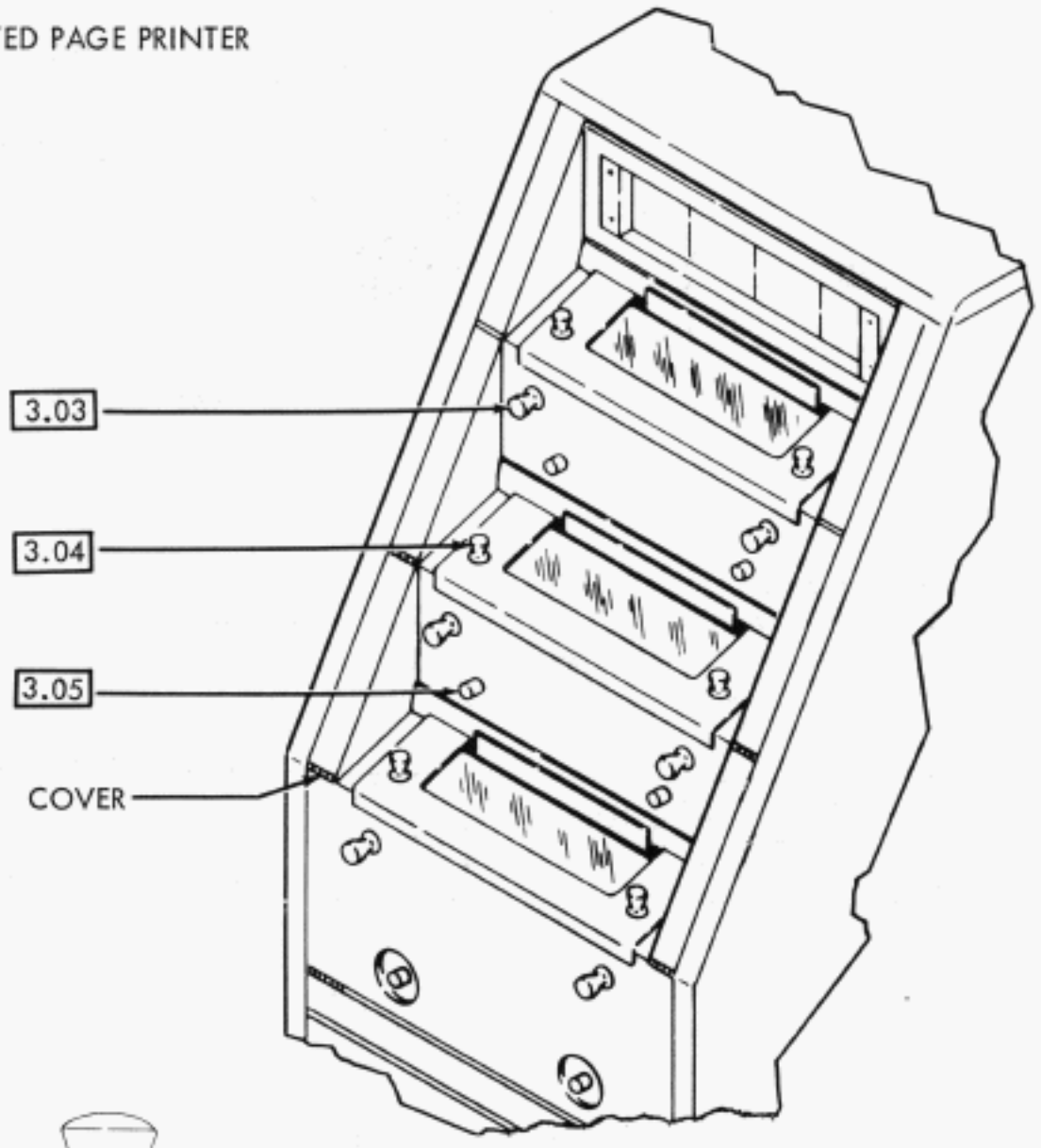

04	HINGES (6)	

3.03 CABINET, COVER LATCHES

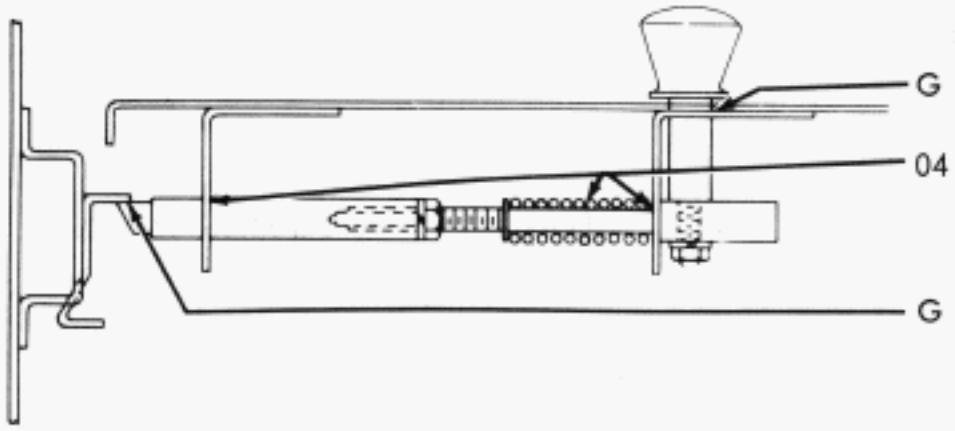

G	SLIDING MEMBERS	COVER LATCHES (6)
04	SPRINGS AND BRACKETS	COVER LATCHES (6)
G	SLIDING MEMBERS	LATCH BOLT (6)

3.04 CABINET, PAPER ACCESS DOOR LATCHES

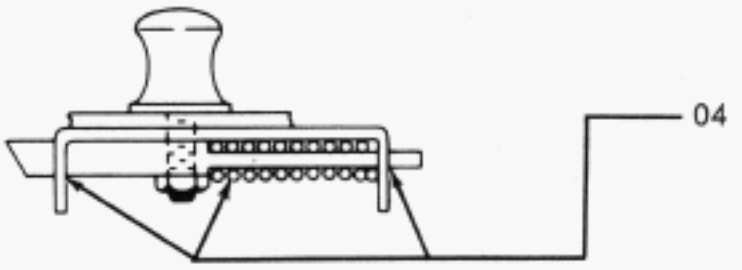

04	SPRINGS AND BRACKETS	ACCESS DOOR LATCHES (6)

3.05 CABINET, CARRIAGE RETURN AND LINE FEED KEYLEVERS

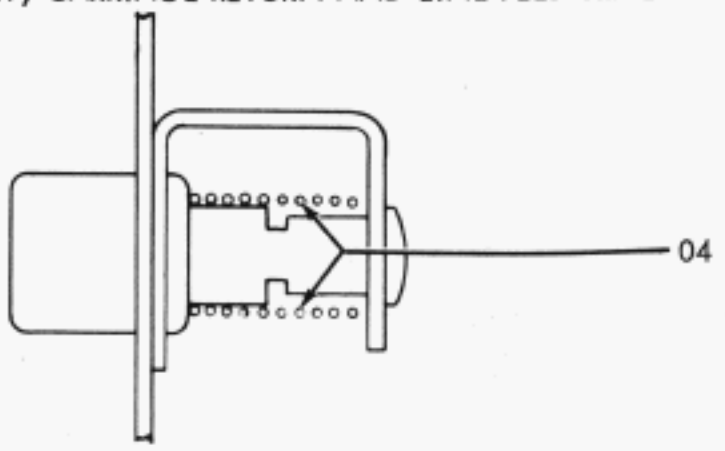

04	SPRING	KEYLEVER (6)

3.06 PAPER WINDER CLUTCH MECHANISM

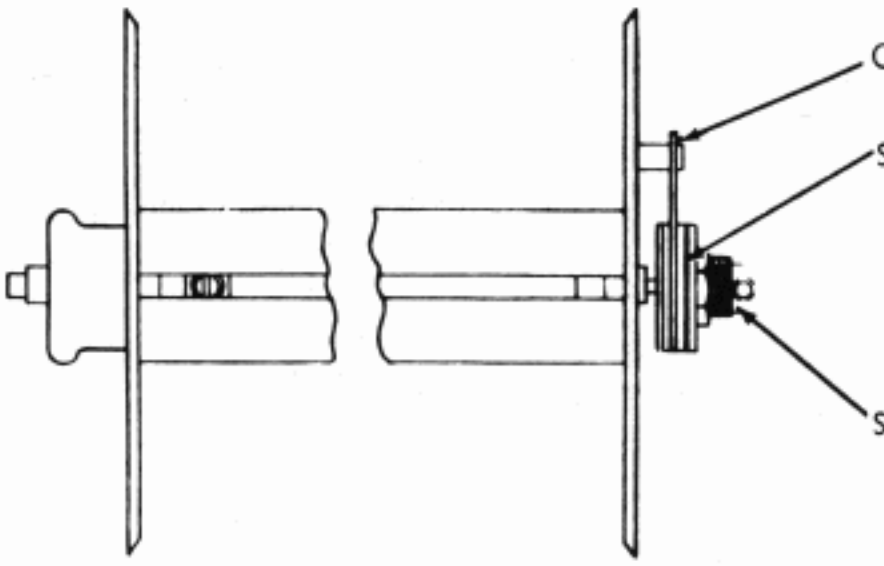

O	CONTACTING POINT	FRICTION DRIVE FORK
SAT	FELT WASHERS	FRICTION CLUTCH
SAT	WICK	FRICTION CLUTCH

3.07 PAPER WINDER DRIVE MECHANISM

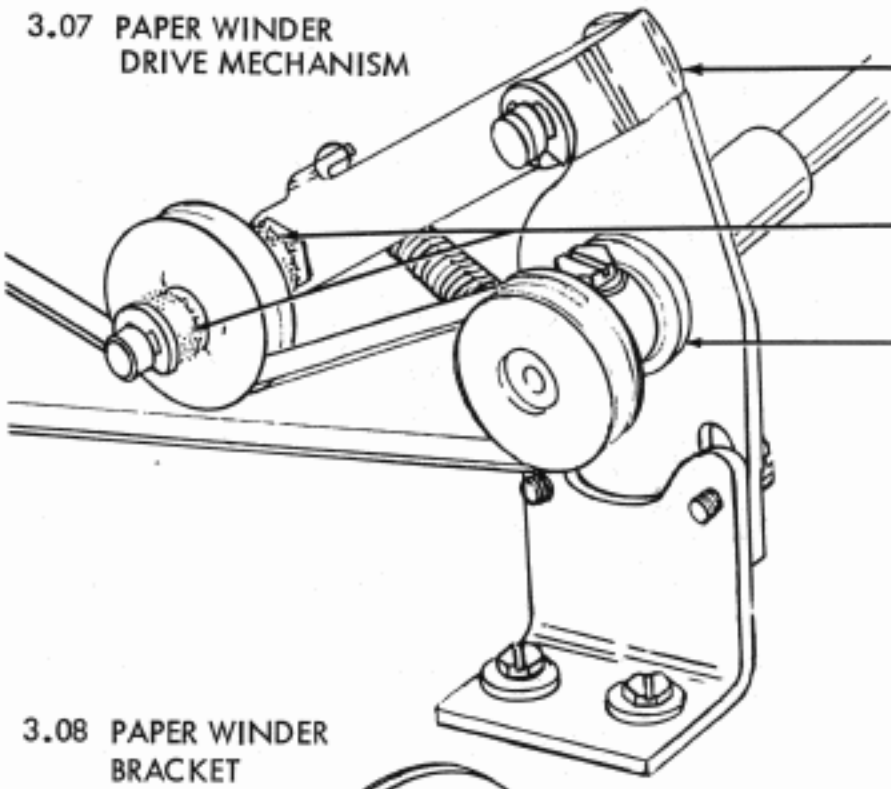

O	PIVOT	IDLER PULLEY LEVER
SAT	FELT WASHERS	IDLER PULLEY
O2	BEARING	DRIVE PULLEY SHAFT

3.08 PAPER WINDER BRACKET

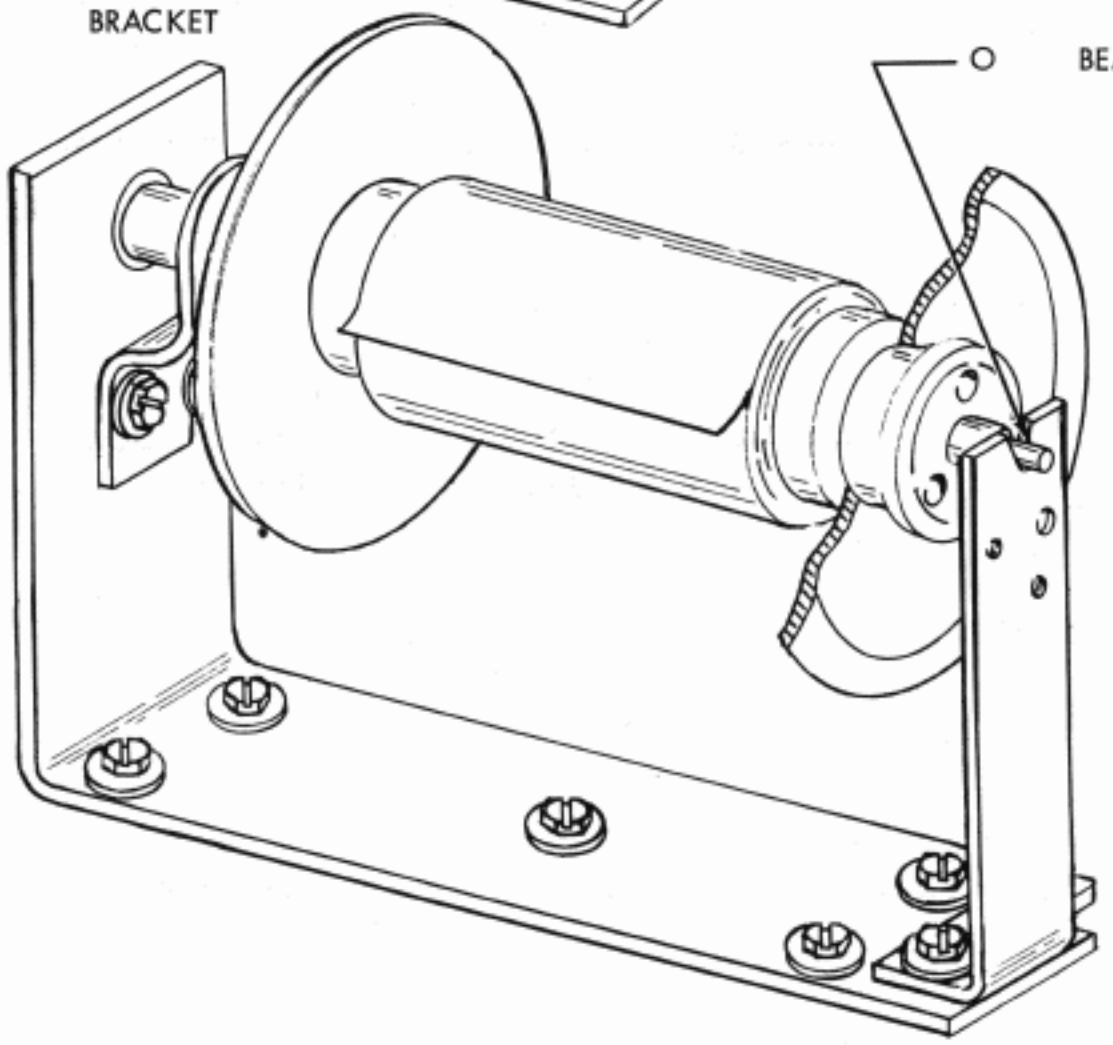

O	BEARING	BEARING BRACKET

3.09 LOW PAPER AND PAPER-OUT SWITCH MECHANISM

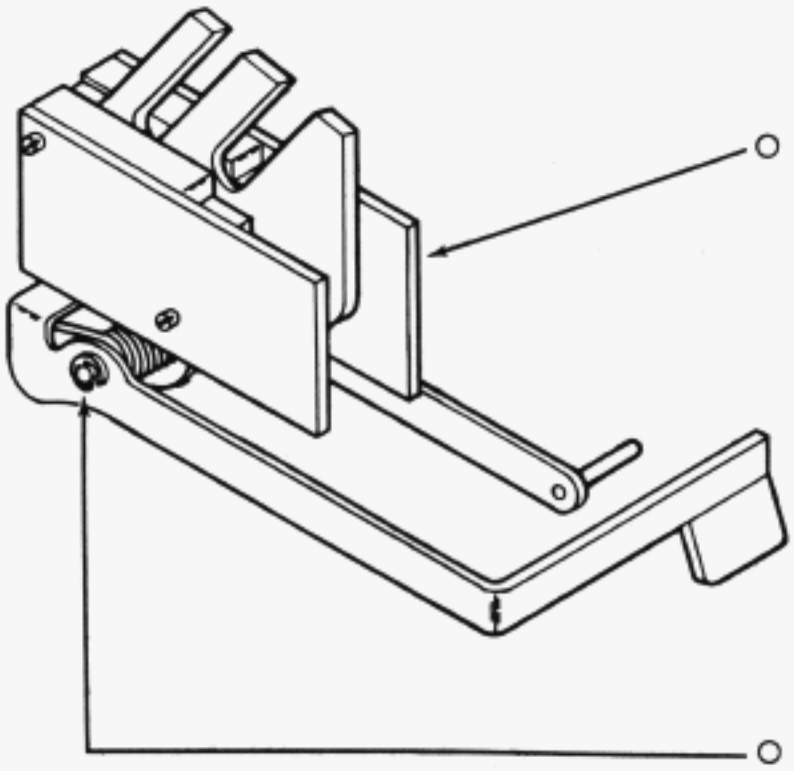

3.10 CABINET, SKIN TIGHT (TABLE OR RACK MOUNTING)

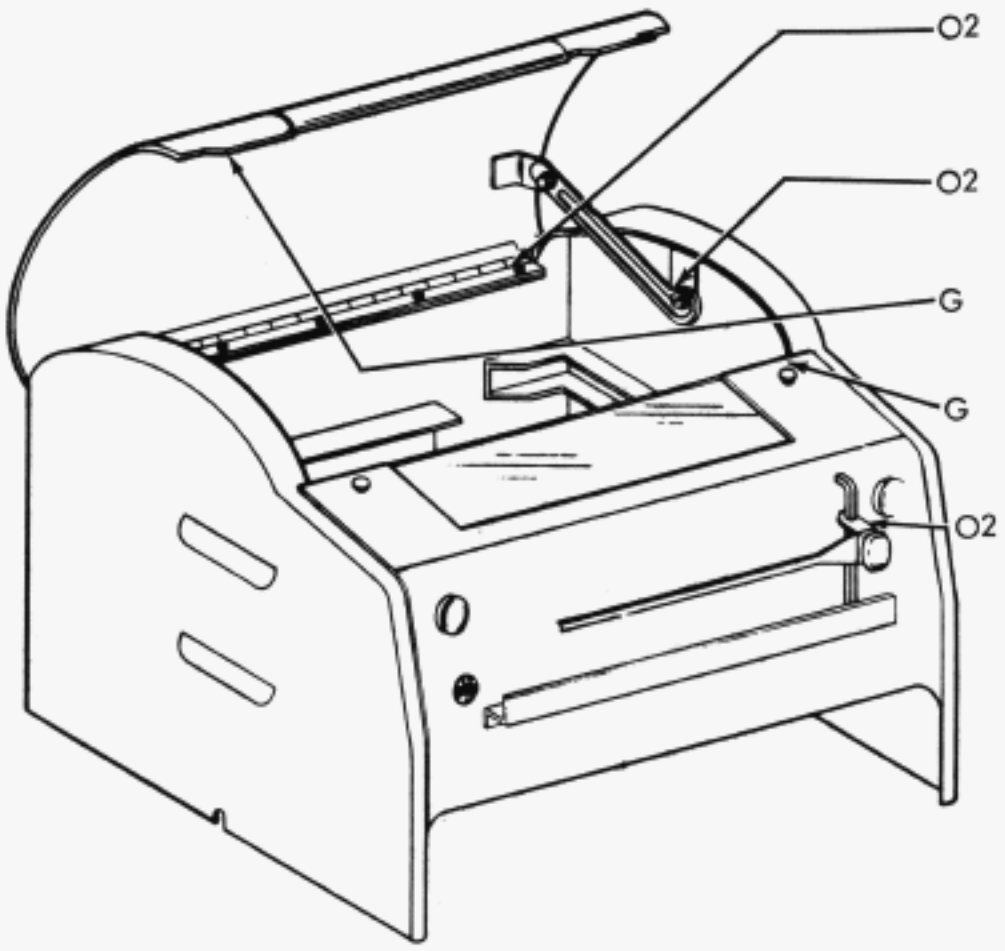

4. KEYBOARD (EARLIER DESIGN)

4.01 REST KEYBOARD BOTTOM SIDE UP.

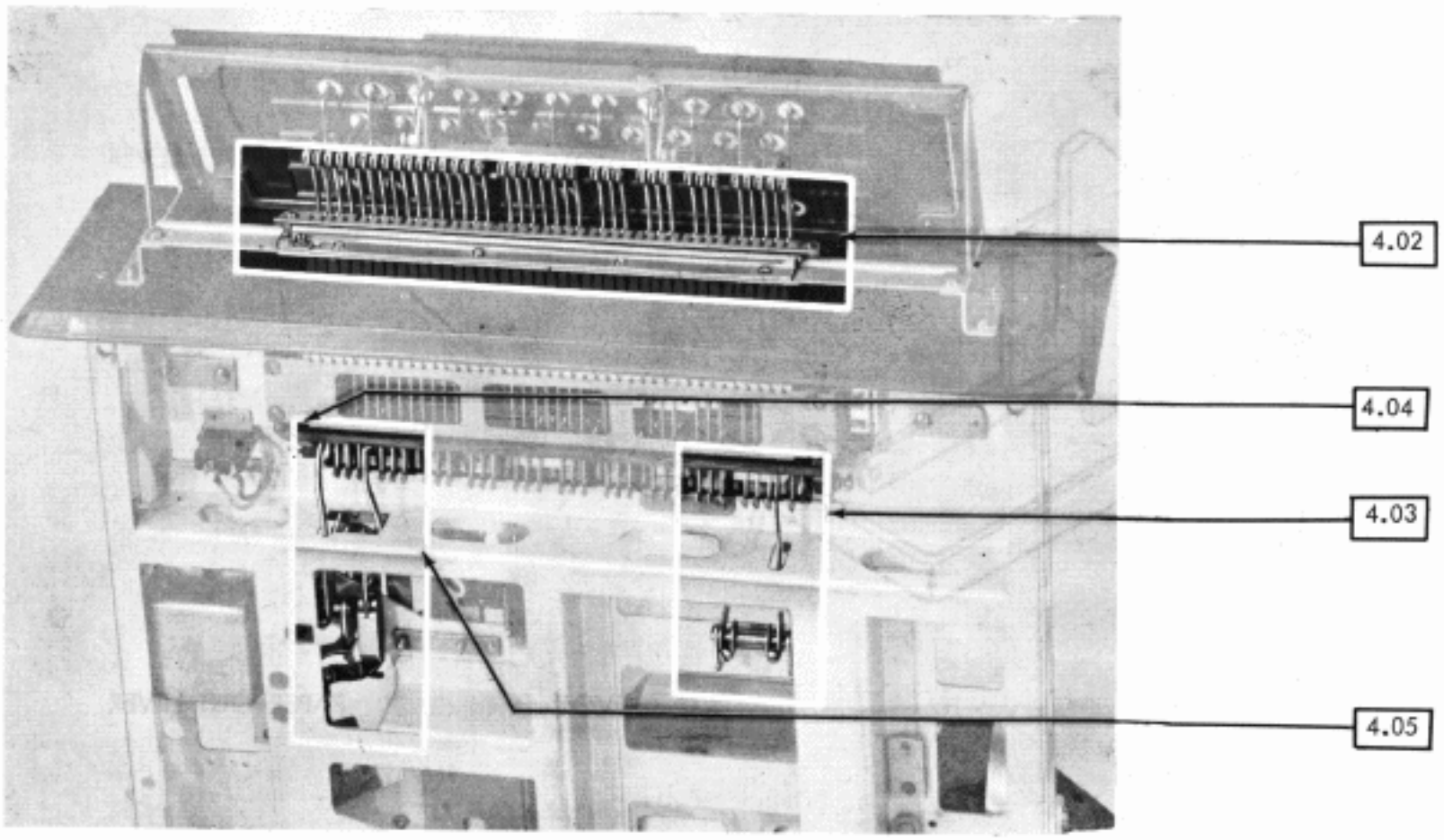

(BOTTOM VIEW)

4.02 CODE LEVER MECHANISM

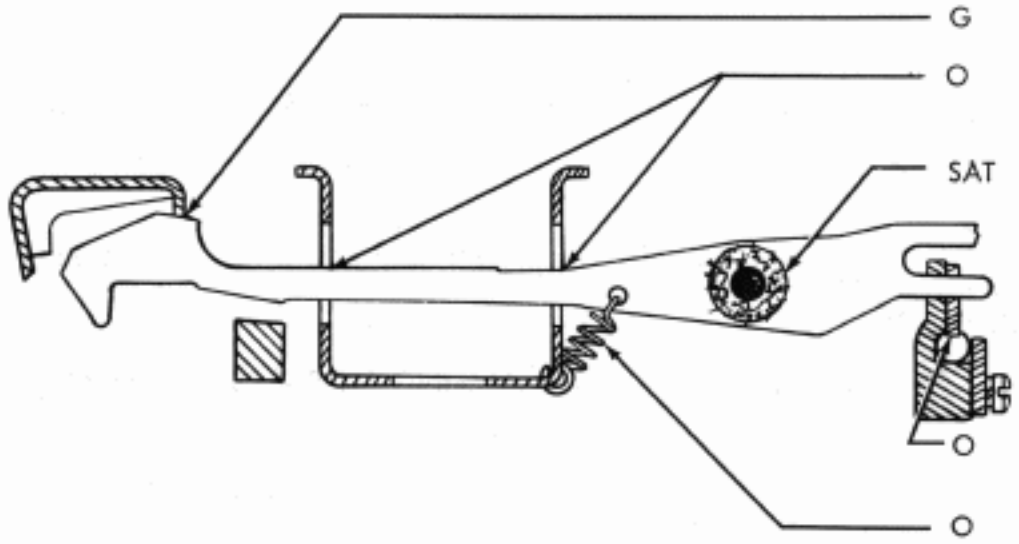

G	CONTACTING SURFACE	CODE LEVER BAIL
O	GUIDE SLOTS (34 LEVERS)	CODE LEVER
SAT	FELT WASHERS (7 WASHERS)	CODE LEVER SHAFT
O	BEARING SURFACES (34 WEDGES)	LOCK BALL TRACK
O	HOOKS - EACH END (33 SPRINGS)	SPRING

4.03 LOCAL CARRIAGE RETURN MECHANISM

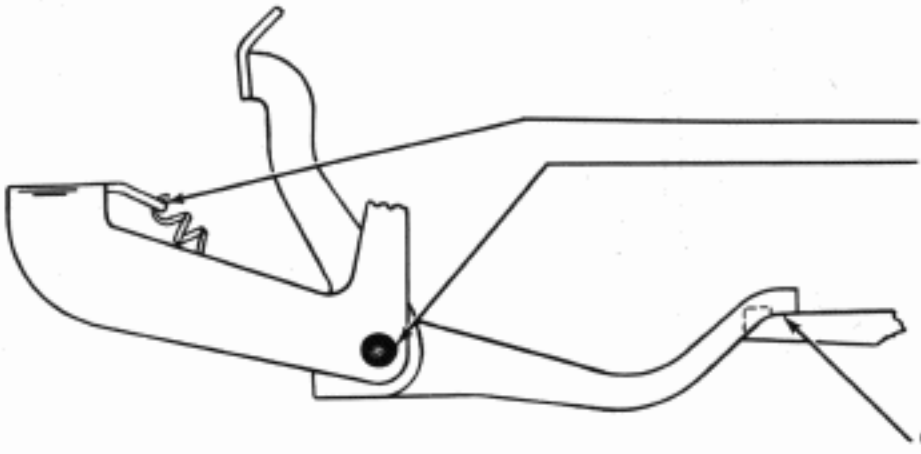

O	HOOK - EACH END	SPRING
O2	BEARING SURFACE	LOCAL CARRIAGE RETURN TRIP SHAFT
G	ENGAGING SURFACE	LOCAL CARRIAGE RETURN FUNCTION ARM

4.04 LOCAL LINE FEED MECHANISM

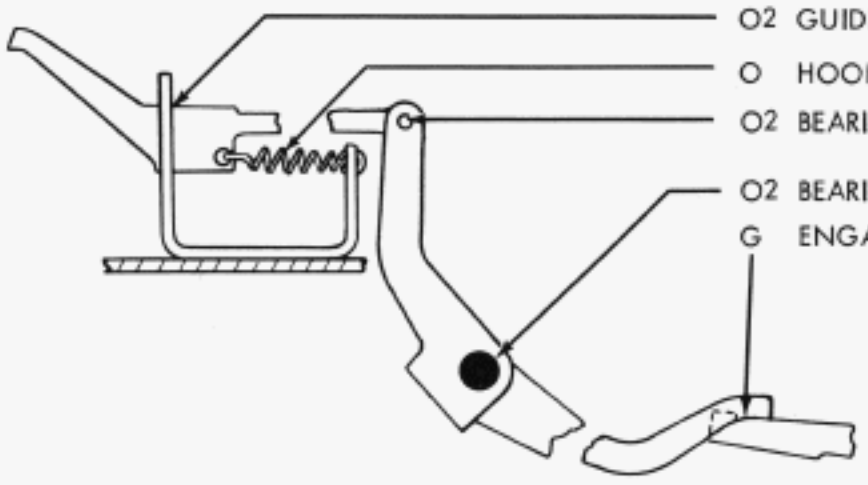

4.05 KEYBOARD LOCK MECHANISM

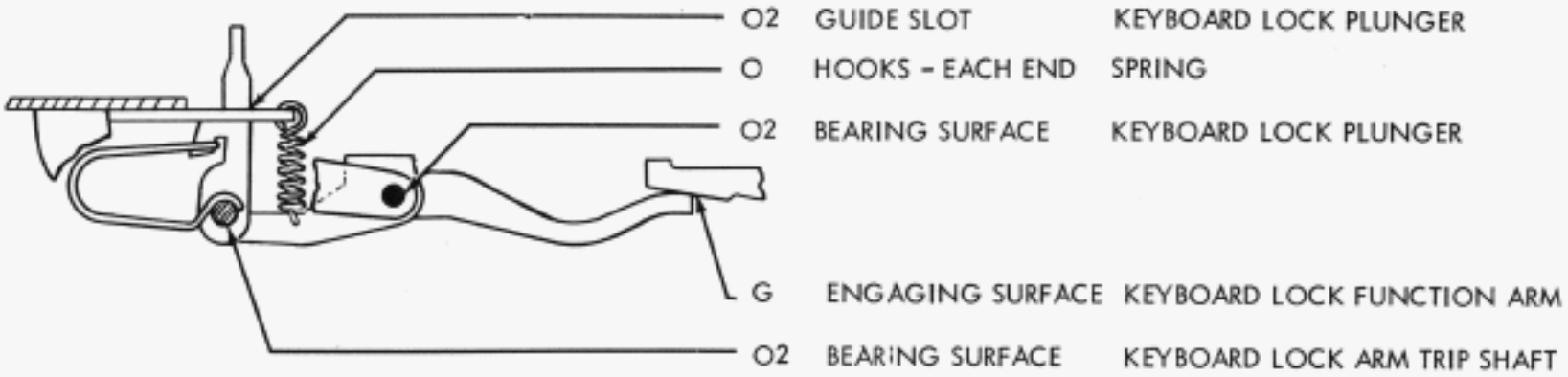

4.06 REST KEYBOARD IN UPRIGHT POSITION

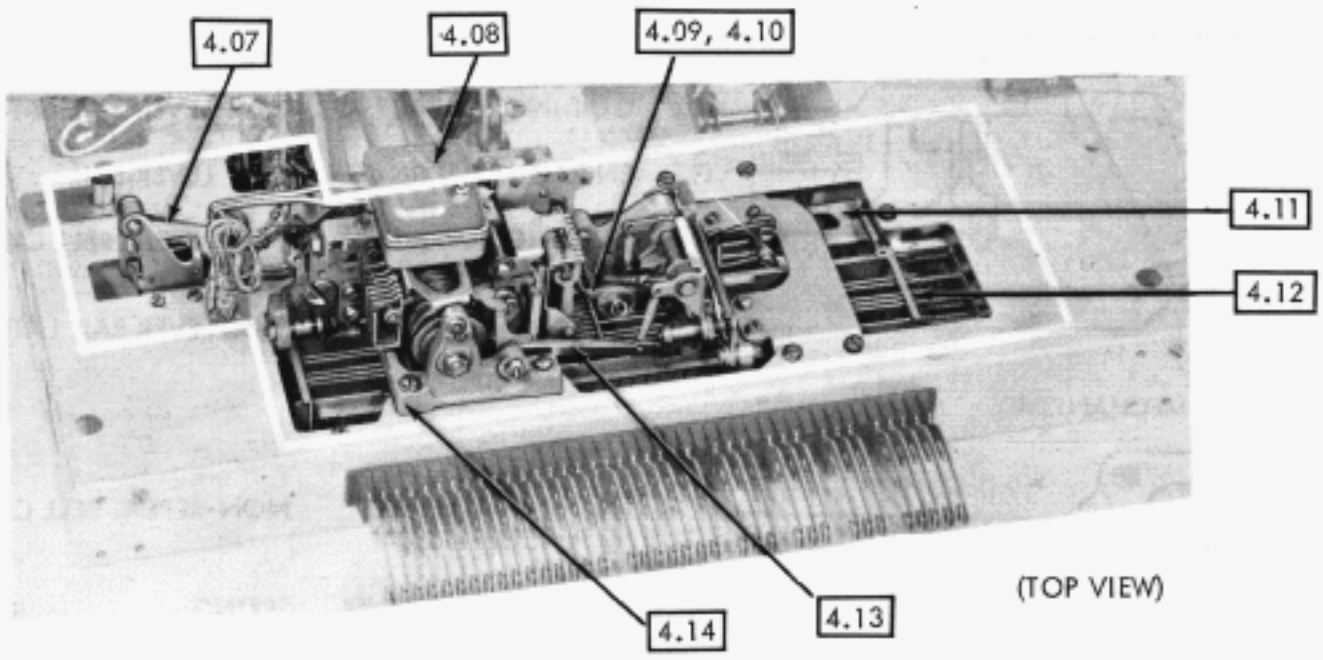

4.07 MARGIN INDICATING MECHANISM

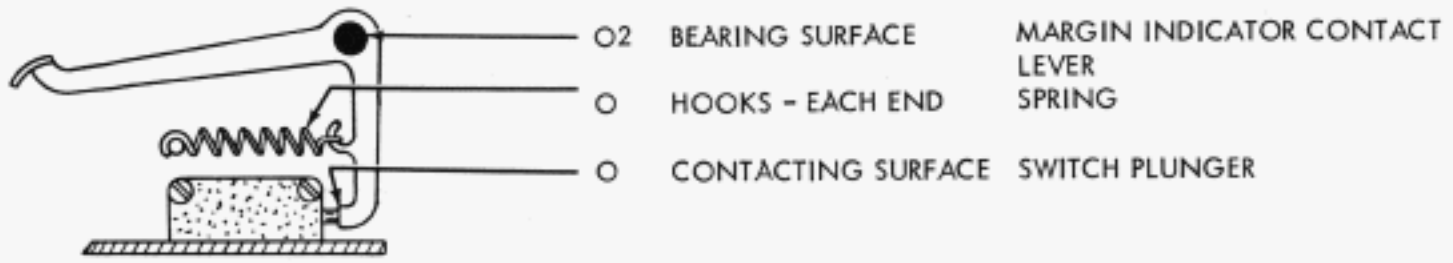

4.08 CONTACT BOX

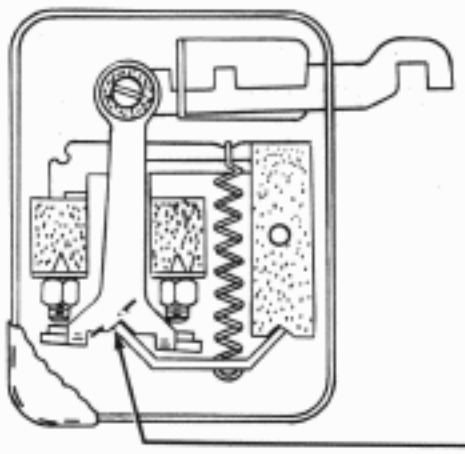

DISASSEMBLY: REMOVE NUT AND LOCK WASHER SECURING CONTACT BOX COVER AND REMOVE COVER.

G	ENGAGING SURFACE	CONTACT TOGGLE

4.09 CODE BAR MECHANISM

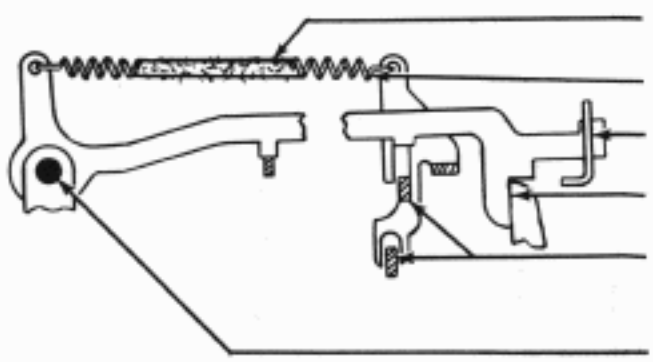

SAT	FELT WICK	SPRING WICK
O	HOOKS - EACH END	SPRING
O2	GUIDING SURFACE	CODE LEVER BAIL LATCH LEVER
G	ENGAGING SURFACE	CODE LEVER BAIL
O2	GUIDING SURFACES (2 PLACES)	NON-REPEAT BELL CRANKS
O2	BEARING	CODE LEVER BAIL LATCH LEVER

4.10 CODE BAR MECHANISM

O2	BEARING SURFACES (2 PLACES)	NON-REPEAT BELL CRANK
O	HOOKS - EACH END	SPRING

4.11 CODE LEVER BAIL MECHANISM

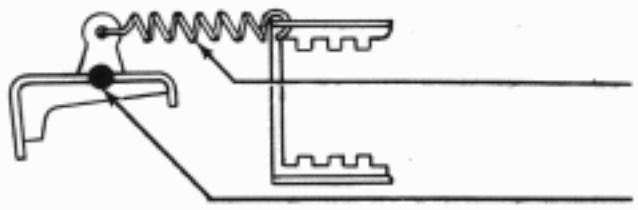

O	HOOKS - EACH END	SPRING
O2	BEARING SURFACES (RIGHT AND LEFT)	CODE LEVER BAIL

4.12 CODE BAR MECHANISM (Continued)

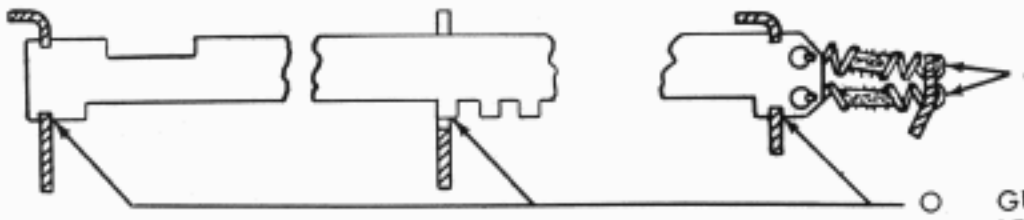

O	HOOKS-EACH END (7 SPRINGS)	SPRING
O	GUIDE SLOTS - LEFT, RIGHT AND CENTER (7 CODE - BARS)	CODE BAR GUIDES

4.13 CODE BAR BAIL AND ECCENTRIC FOLLOWER MECHANISM

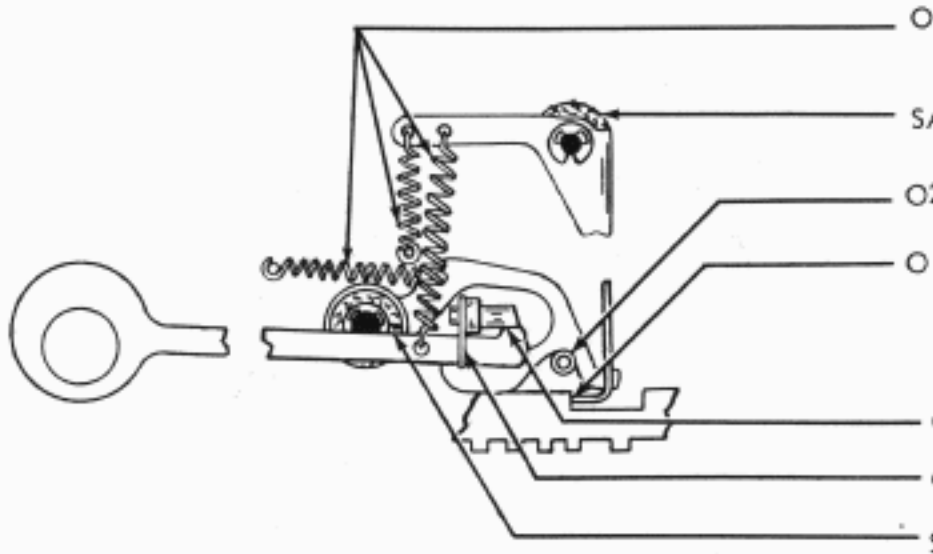

O	HOOKS - EACH END (4 SPRINGS)	SPRING
SAT	FELT WASHERS (FRONT AND REAR)	CODE BAR BAIL BEARING
O2	BEARING SURFACE	CODE BAR BAIL ROLLER
O	ENGAGING SURFACE (7 PLACES)	CODE BAR BAIL
O2	ENGAGING SURFACE	ECCENTRIC FOLLOWER
O2	GUIDE SLOT	ECCENTRIC FOLLOWER
SAT	FELT WASHER	CODE BAR BAIL LATCH LEVER

4.14 KEYBOARD SELECTOR MECHANISM

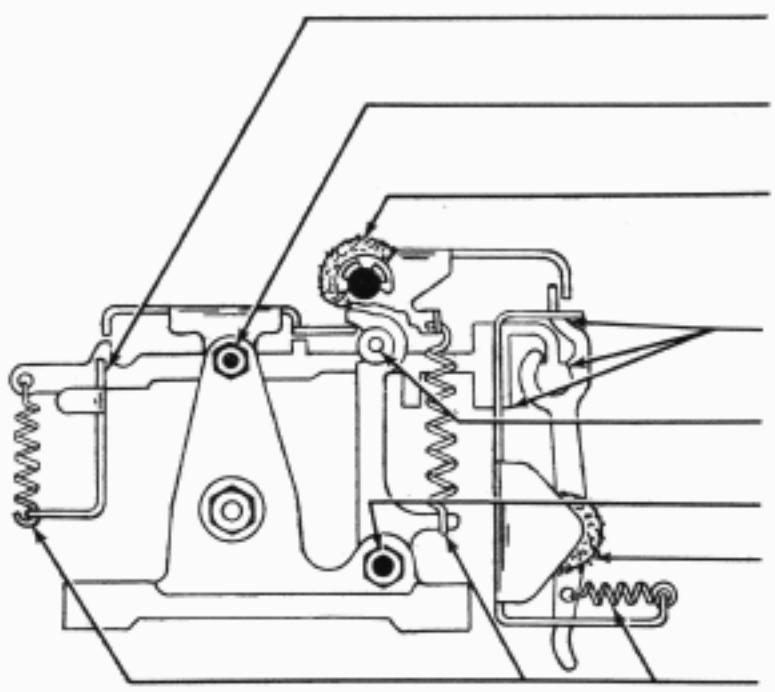

O2	GUIDE SLOTS (7 SLOTS)	SELECTOR LEVERS
O2	BEARING SURFACE (FRONT AND REAR)	ROCKER BAIL
SAT	FELT WASHERS (2 WASHERS - FRONT AND REAR)	LOCKING BAIL SHAFT
O2	GUIDE SLOTS (7 SLOTS)	SELECTOR AND TRANSFER LEVERS
O2	ROLLER BEARINGS (2 ROLLERS)	ROCKER BAIL DETENT
O2	BEARING SURFACE	ROCKER BAIL DETENT
SAT	FELT WASHERS (2 WASHERS - FRONT AND REAR)	TRANSFER LEVERS SHAFT
O	HOOKS - EACH END (3 SPRINGS)	SPRING

4.15 INTERMEDIATE GEAR MECHANISM

REST KEYBOARD IN UPRIGHT POSITION

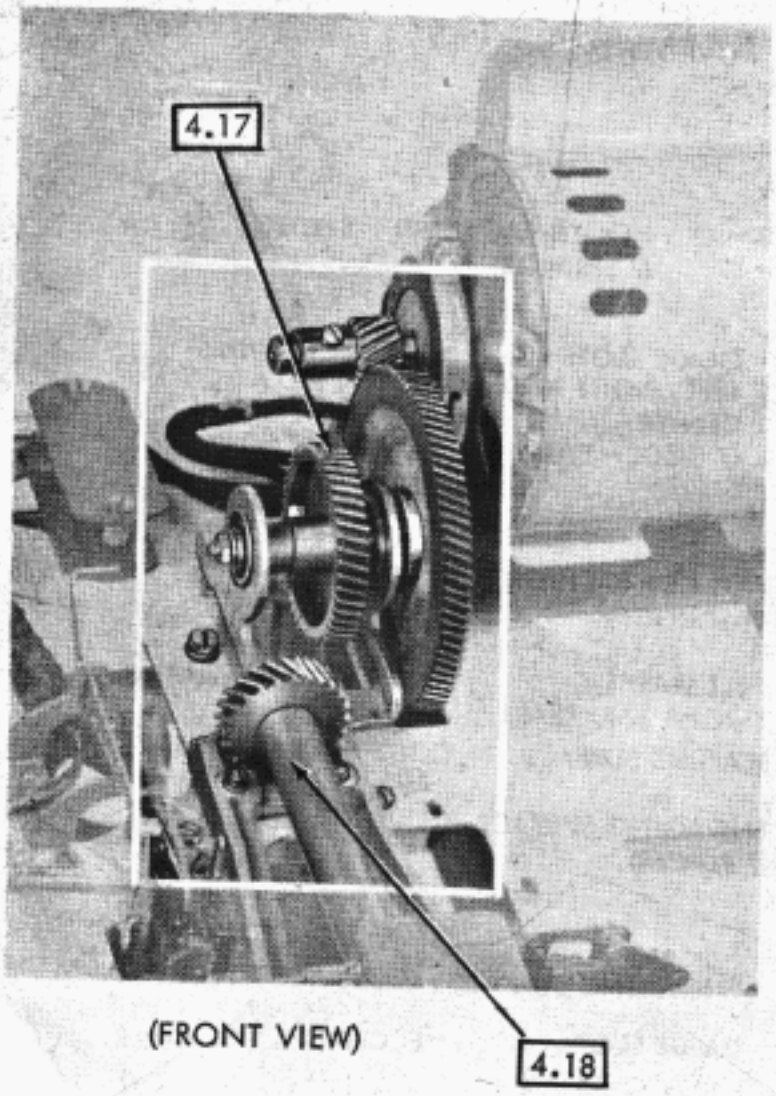

(FRONT VIEW)

4.16 SIGNAL GENERATOR MECHANISM

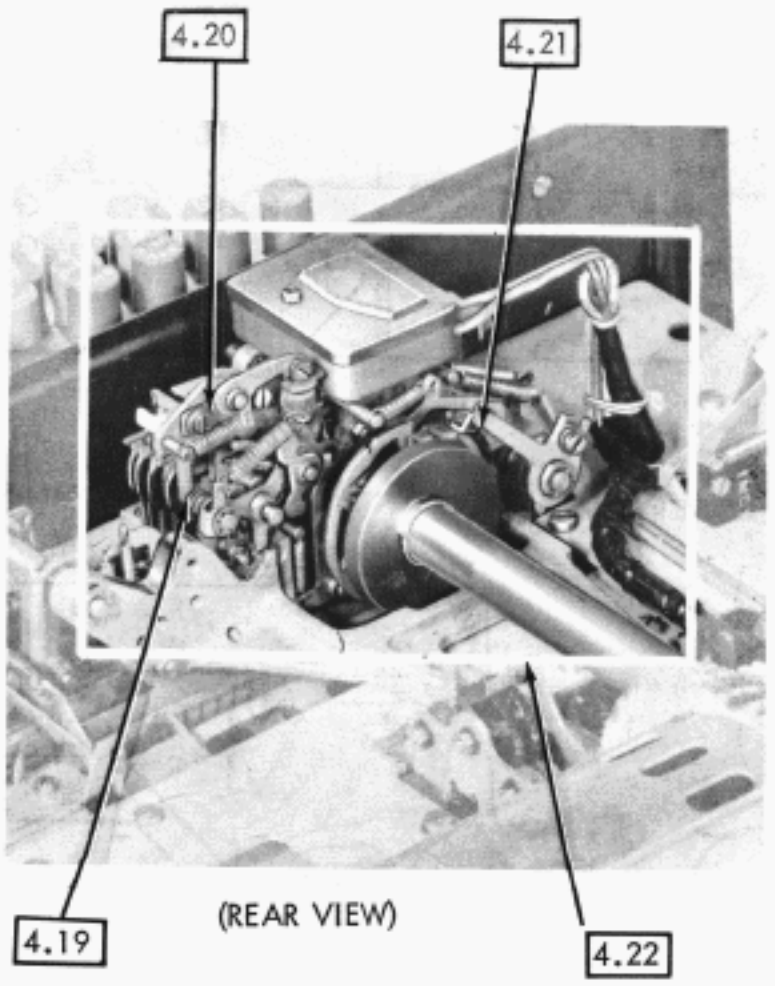

(REAR VIEW)

4.17 INTERMEDIATE GEARS

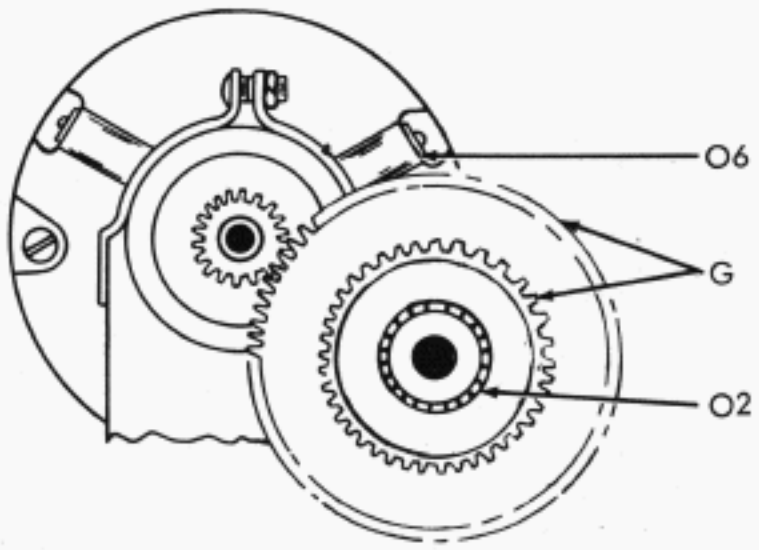

O6	EACH OILER (TOTAL 4 OILERS)	MOTOR SHAFT
G	TEETH (2 GEARS)	INTERMEDIATE GEARS
O2	BALL BEARING	INTERMEDIATE GEAR SHAFT

SEE PAGE 3-1; PARAGRAPH 1.02

4.18 SIGNAL GENERATOR MECHANISM (Continued)

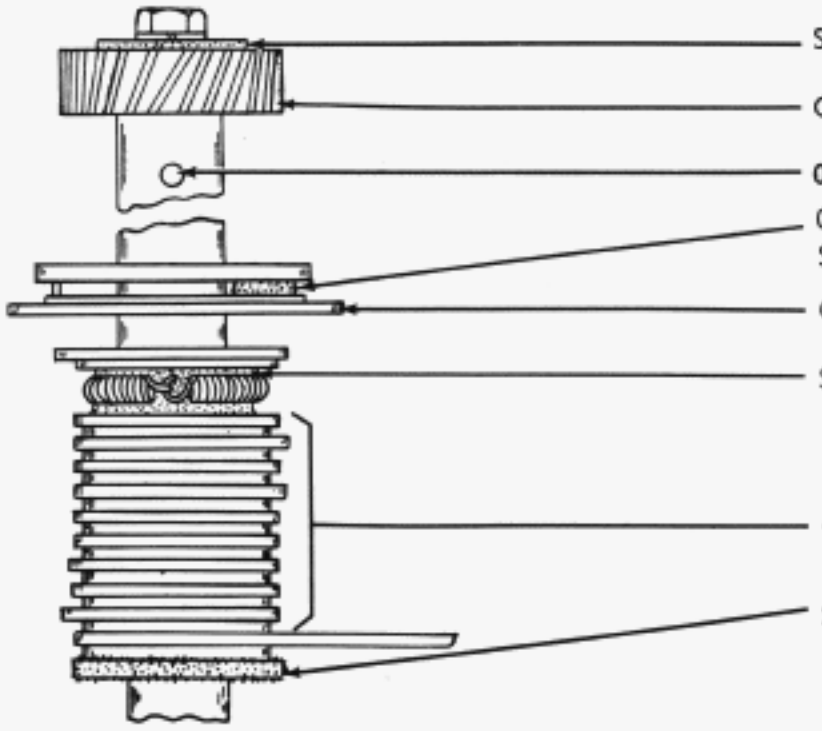

4.19 INTERMEDIATE LEVER MECHANISM

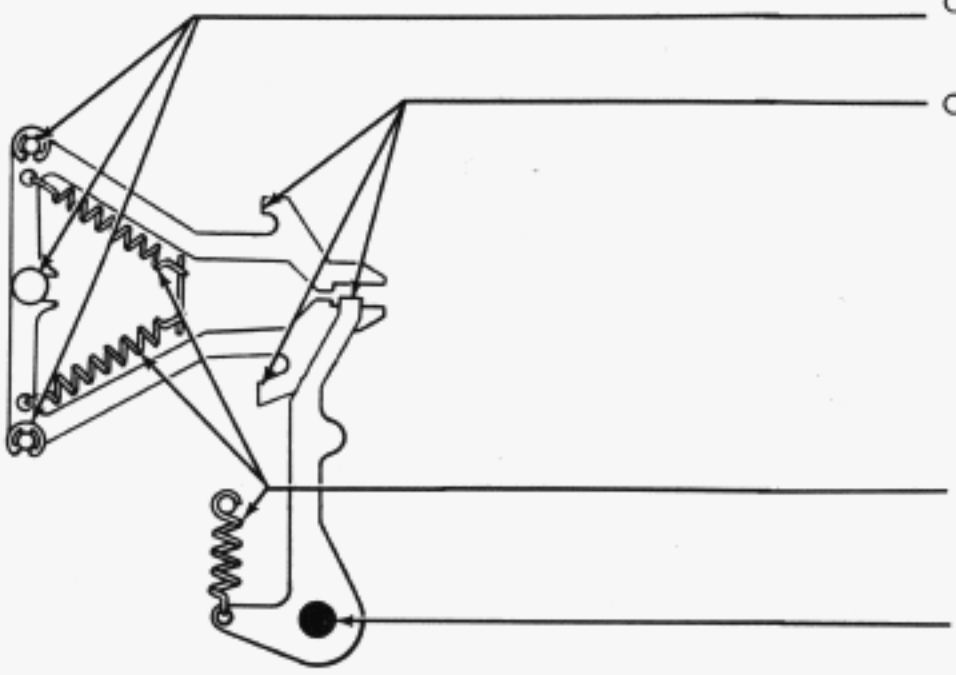

4.20 SIGNAL GENERATOR MECHANISM (Continued)

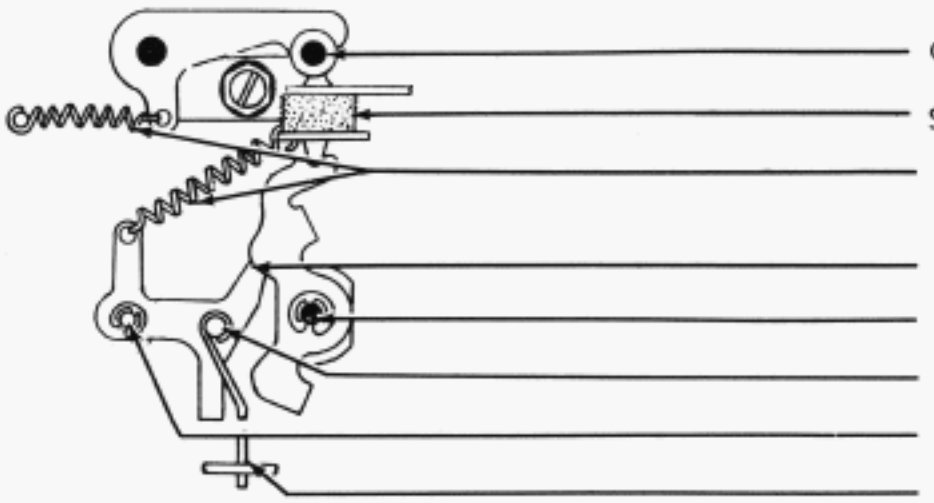

O2	BEARING SURFACE	DETENT TOGGLE
SAT	FELT WASHER	DETENT TOGGLE
O	HOOKS - EACH END (2 SPRINGS)	SPRING
O2	ENGAGING SURFACE	BREAK BAIL
O2	BEARING SURFACE	OSCILLATING LEVER
O2	BEARING SURFACE	BREAK ROD
O2	BEARING SURFACE	BREAK LEVER
O2	GUIDE HOLE	BREAK ROD

4.21 SIGNAL GENERATOR CLUTCH

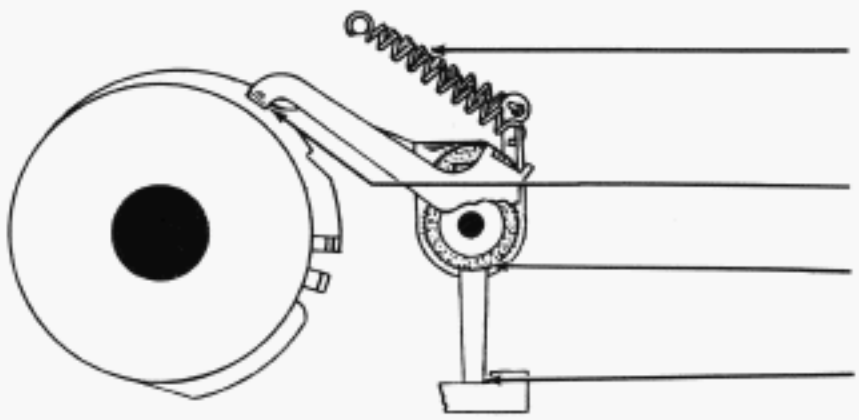

O	HOOKS - EACH END (2 SPRINGS)	SPRING
O2	LATCHING SURFACE	CLUTCH STOP LEVER AND THROWOUT BAIL LEVER
SAT	FELT WASHER (2 WASHERS - FRONT & REAR	THROWOUT BAIL AND TRIP BAIL
O2	ENGAGING SURFACE	CLUCTH TRIP BAIL

4.22 TIME DELAY MECHANISM

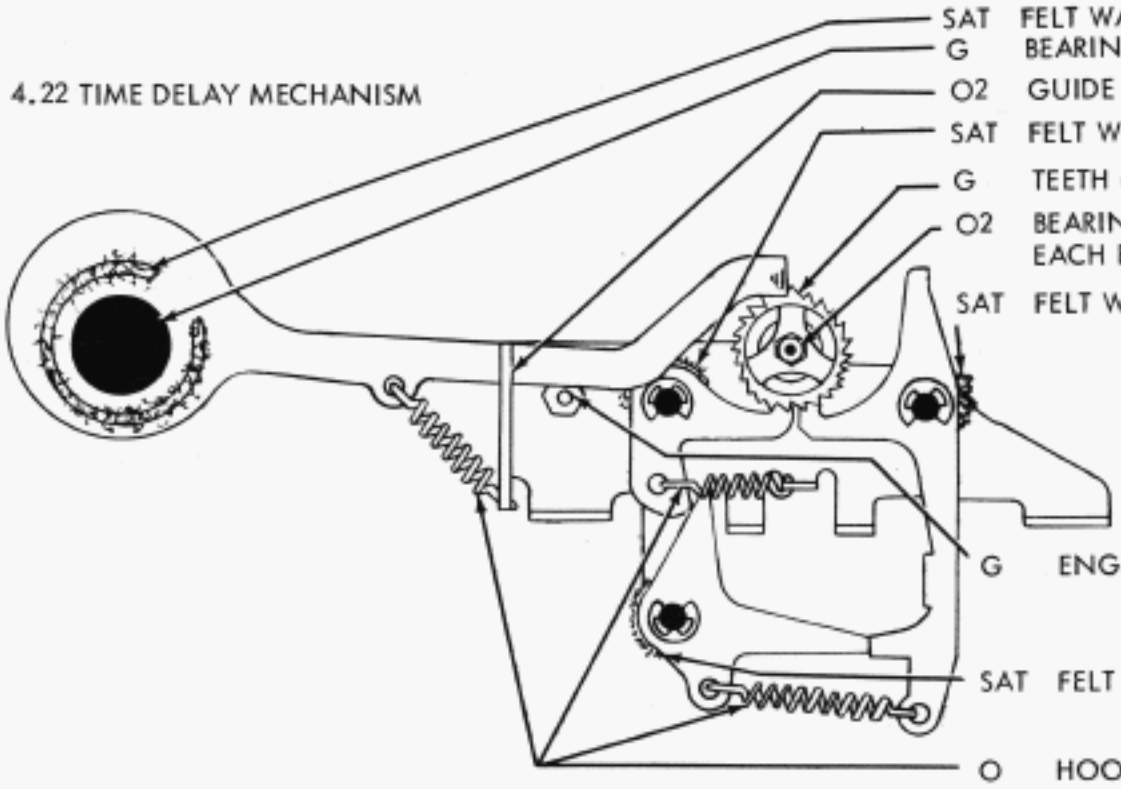

SAT	FELT WASHER	ECCENTRIC FOLLOWER PAWL
G	BEARING SURFACE	ECCENTRIC FOLLOWER PAWL
O2	GUIDE SLOT	ECCENTRIC FOLLOWER PAWL
SAT	FELT WASHER	LATCH PAWL
G	TEETH (2 WHEELS)	RATCHET WHEELS
O2	BEARING SURFACE EACH END	RATCHET WHEEL SHAFT
SAT	FELT WASHER	CONTACT PAWL
G	ENGAGING SURFACE	ECCENTRIC FOLLOWER PAWL
SAT	FELT WASHER	LATCH LEVER
O	HOOKS - EACH END (3 SPRINGS)	SPRING

5. TYPING UNIT
5.01 REST TYPING UNIT IN UPRIGHT POSITION

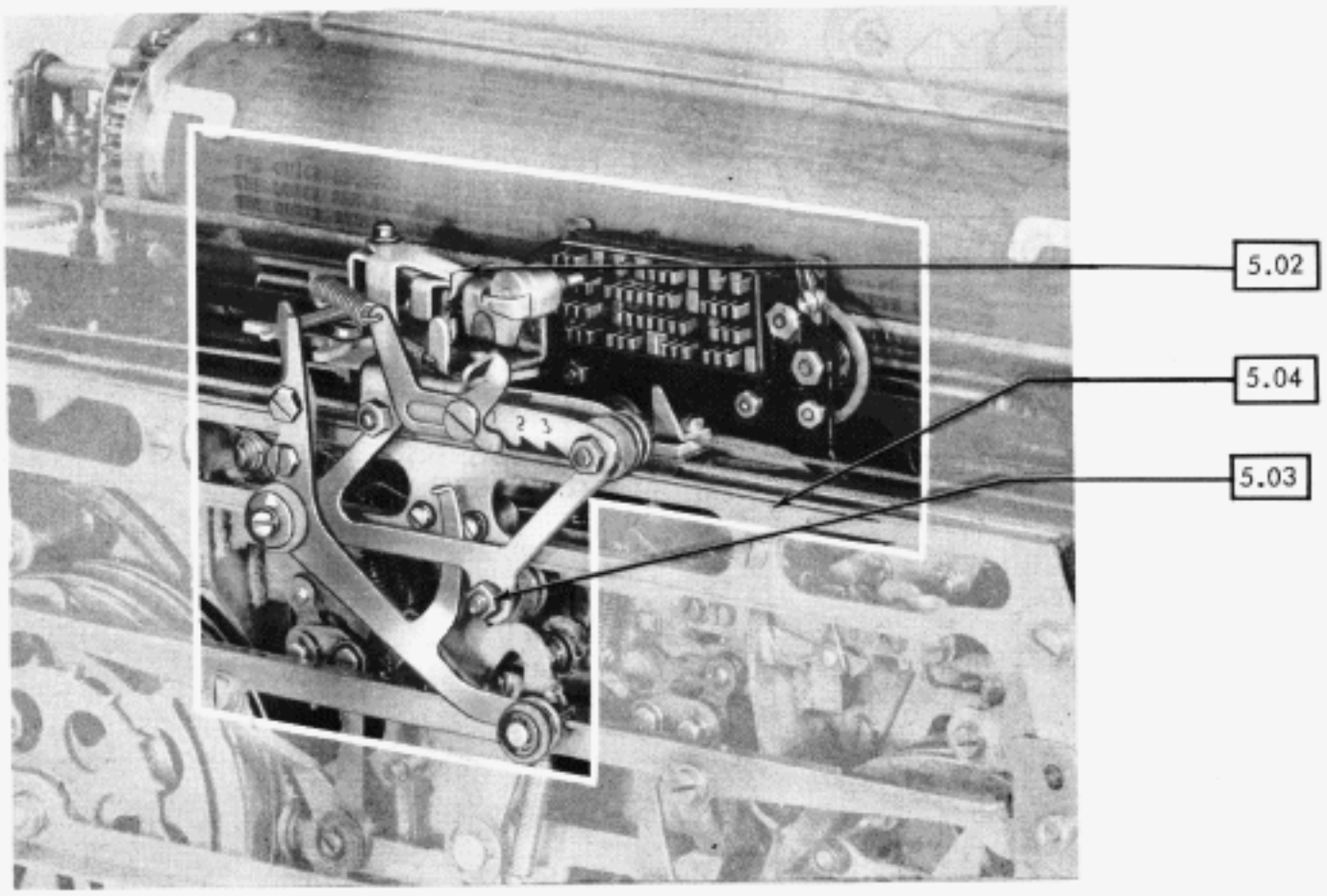

5.02 PRINTING MECHANISM

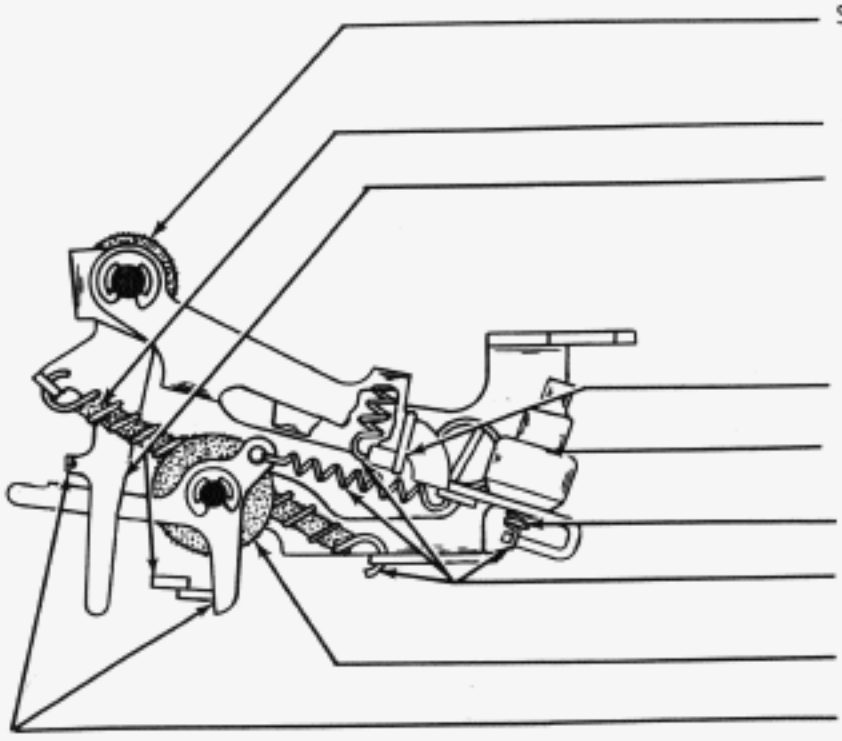

SAT	FELT WASHERS (2 WASHERS	PRINTING HAMMER OPERATING BAIL
G	ENGAGING SURFACE	SECONDARY PRINTING ARM
SAT	FELT WICK	SPRING WICK
G	ENGAGING SURFACE	PRINTING HAMMER STOP
G	ENGAGING SURFACE	PRINTING HAMMER
SAT	FELT WICK	SPRING WICK
O	HOOKS - EACH END (4 SPRINGS)	SPRING
SAT	FELT WASHER	OPERATING BAIL LATCH
O2	ENGAGING SURFACES (2 PLACES	OPERATING BAIL LATCH

5.03 PRINTING MECHANISM (Continued)

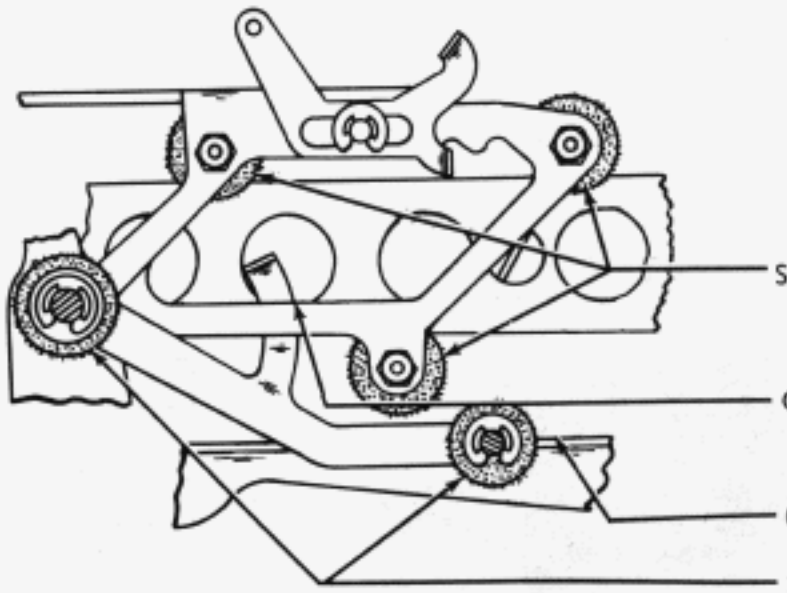

SAT	FELT WASHERS (3 WASHERS)	PRINTING CARRIAGE ROLLERS
G	GUIDING SURFACE	PRINTING ARM EXTENSION
010	TRACK SURFACE	PRINTING TRACK
SAT	FELT WASHERS (2 WASHERS)	PRINTING ARM

5.04 TYPE BOX CARRIAGE MECHANISM

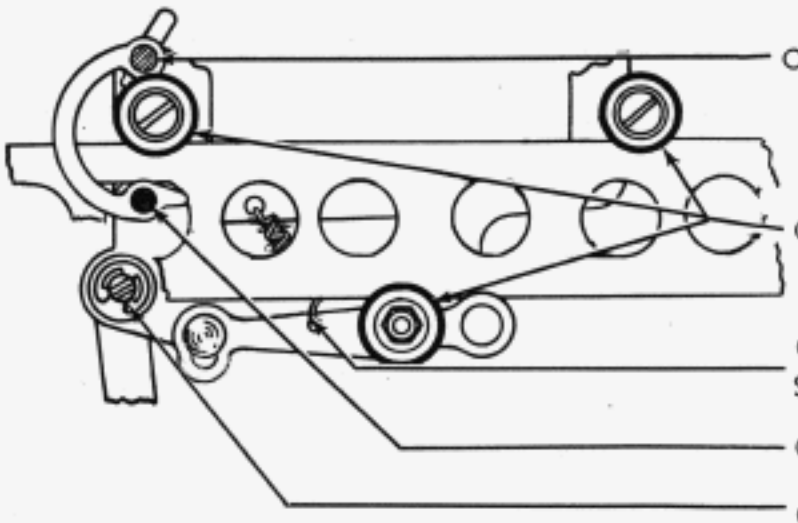

O	BEARING SURFACE	TYPE BOX CARRIAGE LATCH TOGGLE
O2	BEARINGS (3 ROLLERS)	TYPE BOX CARRIAGE ROLLERS
O	HOOK - EACH END	SPRING
SAT	FELT WICK	
O	BEARING SURFACE	TYPE BOX CARRIAGE LATCH
O2	BEARING SURFACE	TYPE BOX CARRIAGE LINK

5.05 CODE BAR MECHANISM
ALSO LOCATION OF PAPER FEED MECHANISM (5.09)

REST TYPING UNIT IN UPRIGHT POSITION

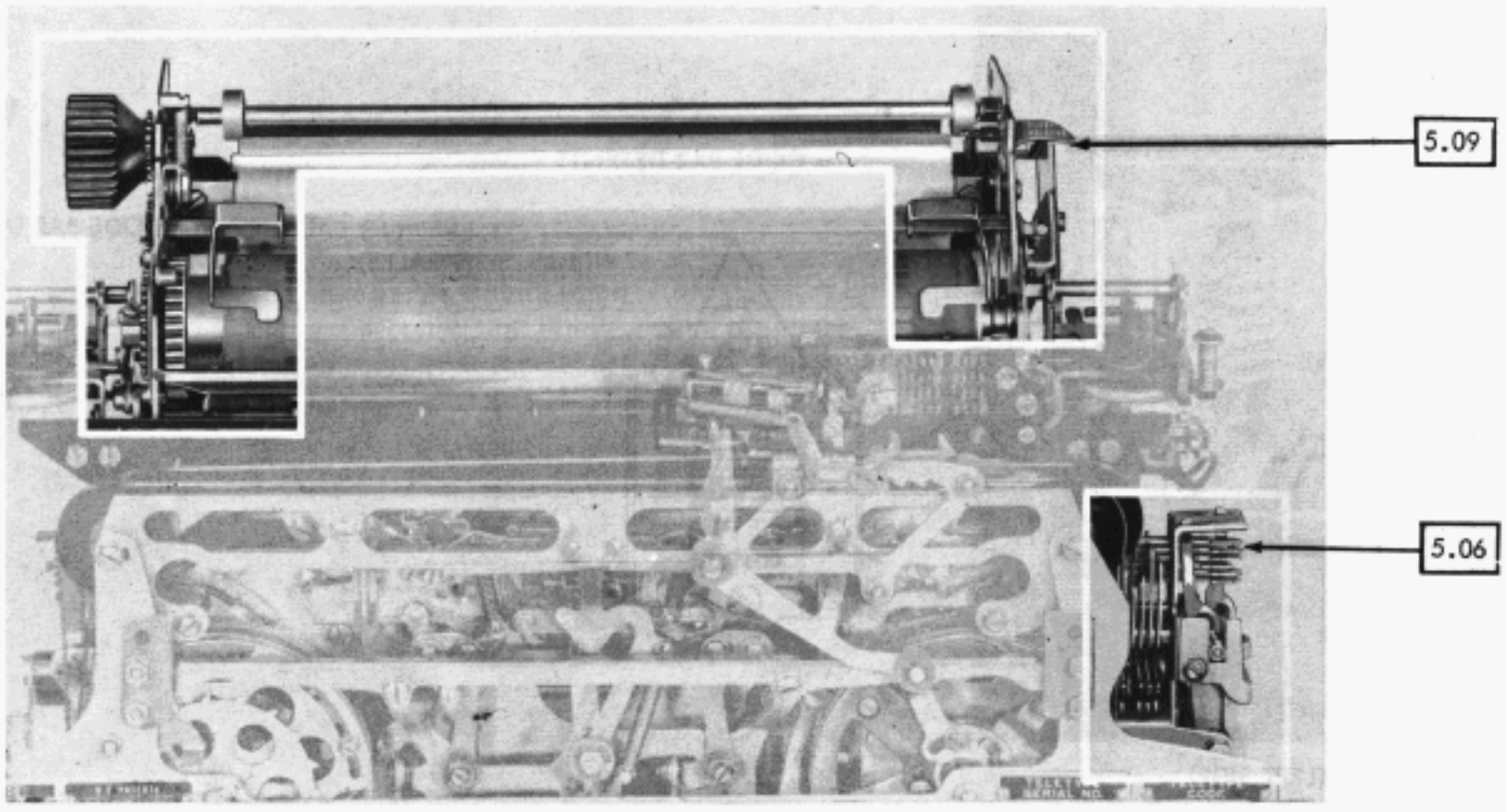

(FRONT VIEW)

5.06 CODE BAR MECHANISM

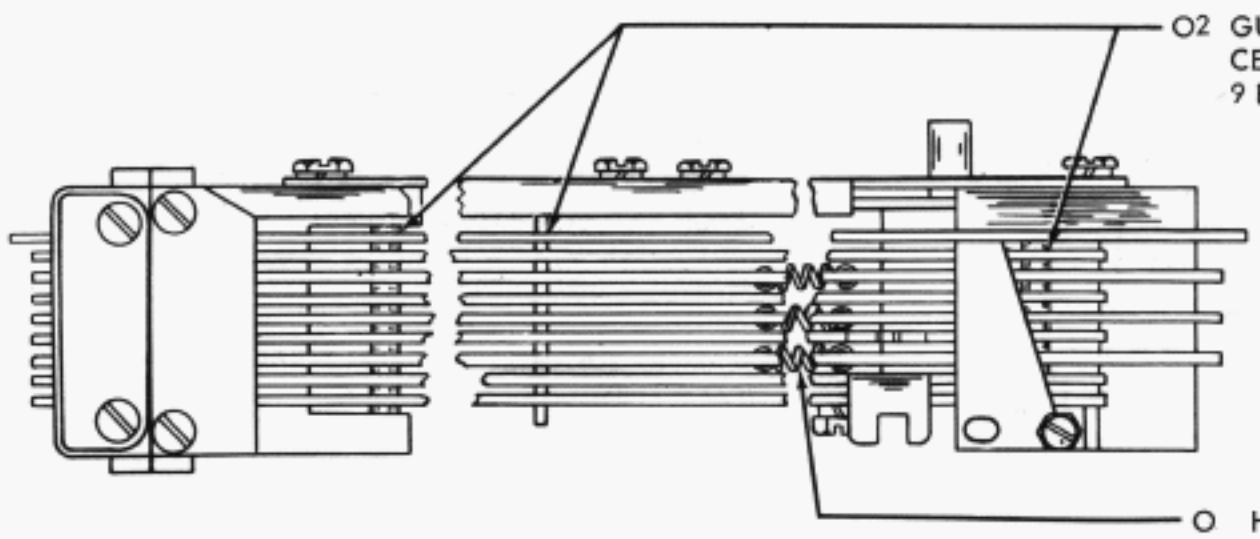

5.07 CODE BAR MECHANISM (Continued)

REST TYPING UNIT IN UPRIGHT POSITION

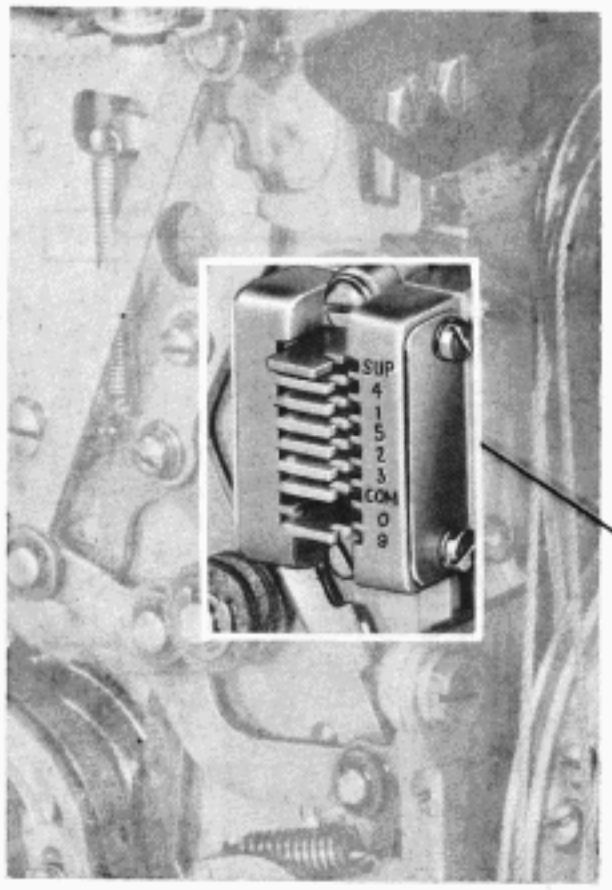

(LEFT SIDE)

5.08 CODE BAR DETENTS

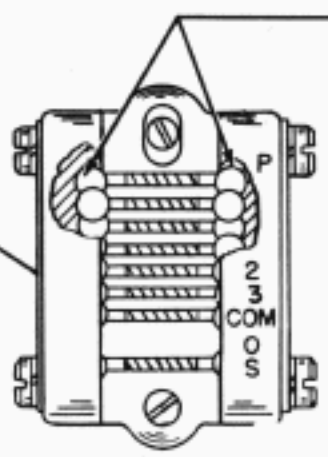

O2	BEARING BALLS (9 BALLS)	CODE BAR DETENT

5.09 PAPER FEED MECHANISM (FRONT VIEW)

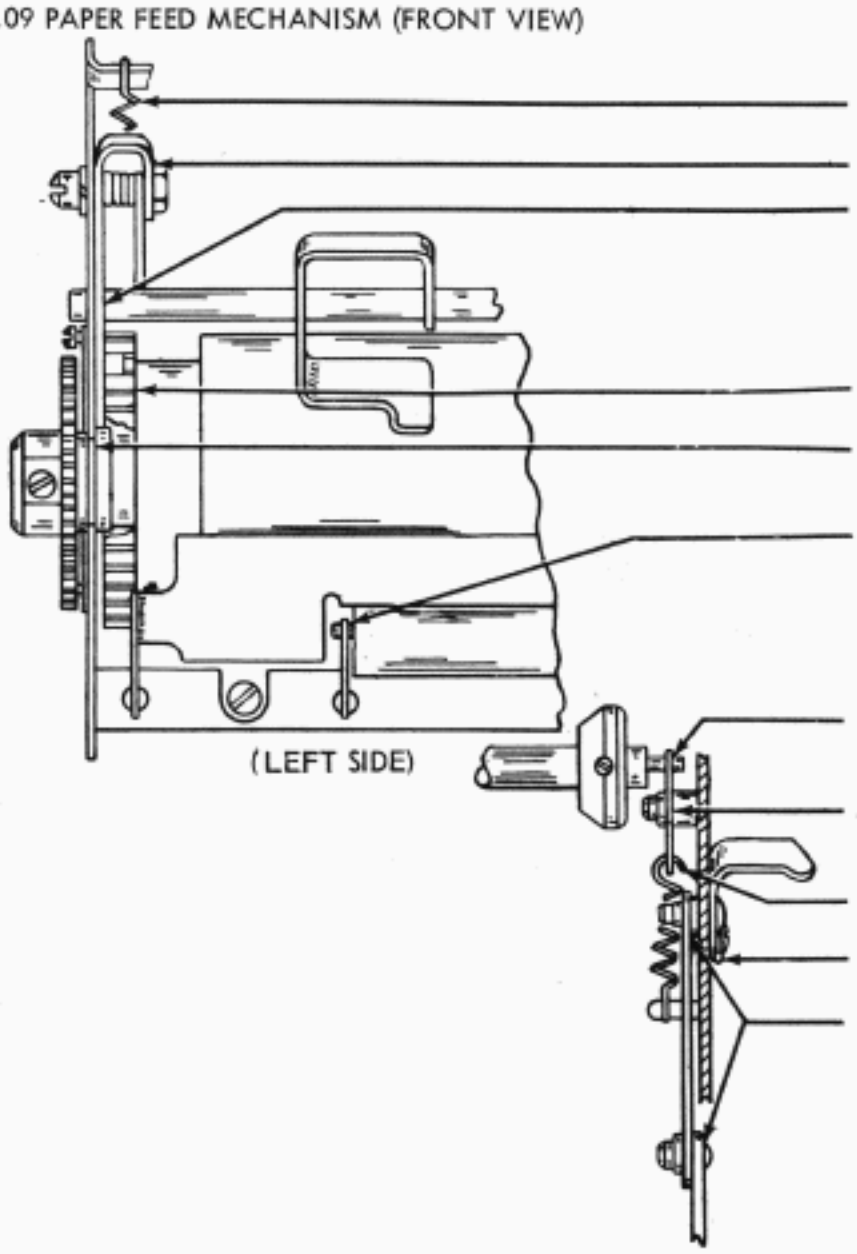

O	HOOKS - EACH END	SPRING
O2	BEARING SURFACE	PLATEN DETENT BAIL
O2	BEARING SURFACE (EACH END)	PAPER FINGER SHAFT
G	TEETH (2 GEARS)	PLATEN GEARS
O2	BEARINGS (EACH END)	PLATEN SHAFT
O	BEARING SURFACES- EACH END (6 ROLLERS)	PAPER PRESSURE ROLLER SHAFTS (WIPE OFF EXCESS OIL)
O2	BEARING SURFACES (EACH END)	PAPER STRAIGHTENER SHAFT
O2	BEARING SURFACES (RIGHT AND LEFT)	PAPER STRAIGHTENER LEVERS
O	HOOKS - EACH END	SPRING
O2	BEARING SURFACE	RELEASE LEVER
O2	BEARING SURFACES (EACH END)	RELEASE LEVER LINK

(LEFT SIDE)

(RIGHT SIDE)

5.10 LEFT RIBBON FEED MECHANISM

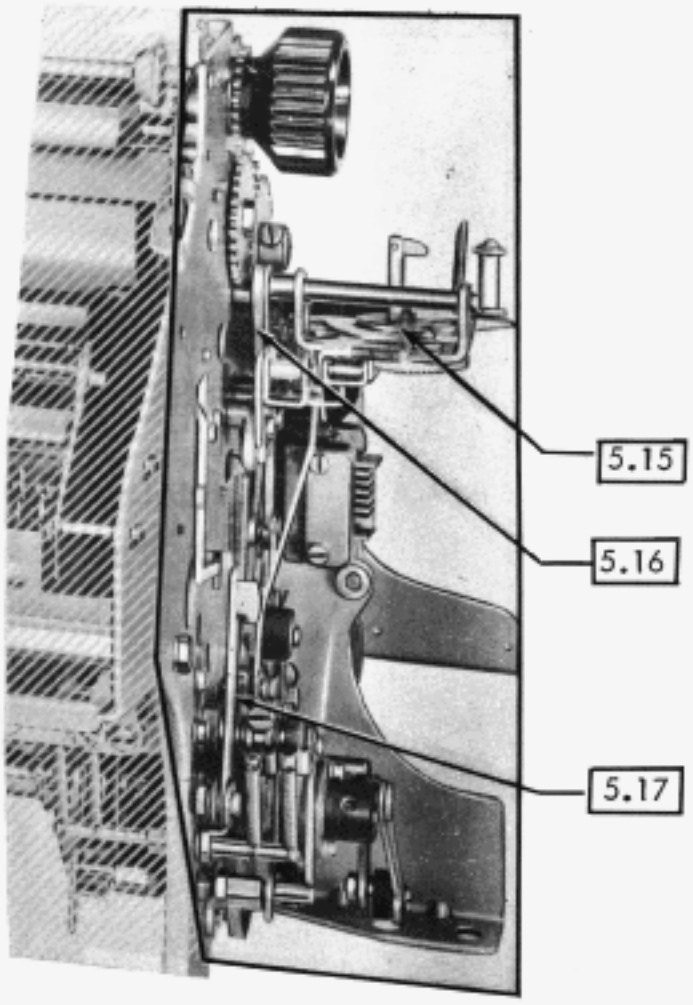

5.11 RIGHT RIBBON FEED MECHANISM

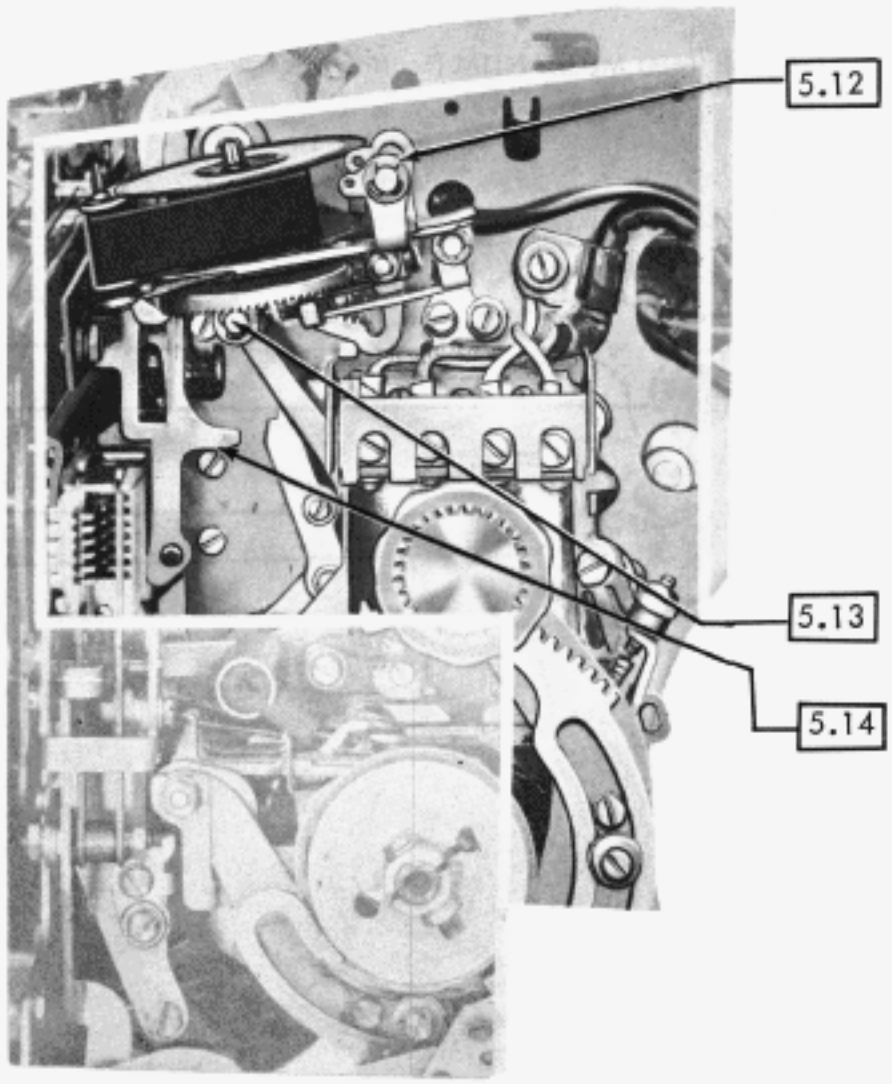

5.12 RIBBON FEED MECHANISM (RIGHT SIDE)

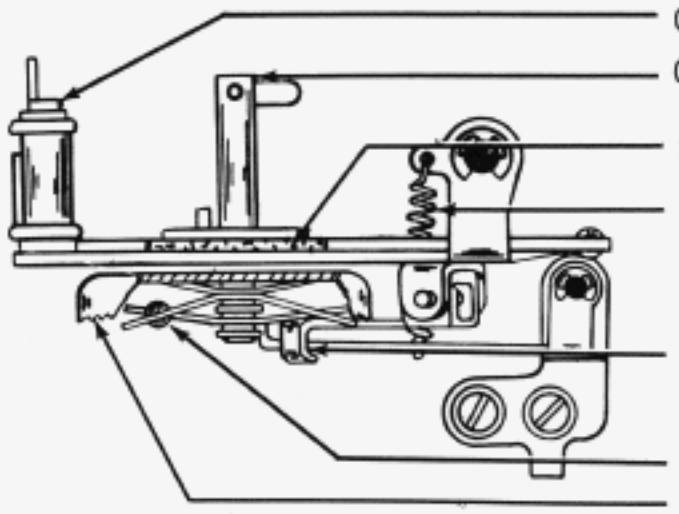

(RIGHT SIDE VIEW)

02	BEARING SURFACE	RIBBON ROLLER SHAFT
02	BEARING SURFACE	RIBBON SPOOL TOGGLE
SAT	FELT WASHER	RIBBON SPOOL SHAFT
0	HOOKS-EACH END	RIBBON FEED LEVER SPRING
02	ENGAGING SURFACE	RIBBON DETENT LEVER
0	HOOKS-EACH END	RIBBON RATCHET WHEEL SPRING
G	TEETH	RIBBON RATCHET WHEEL

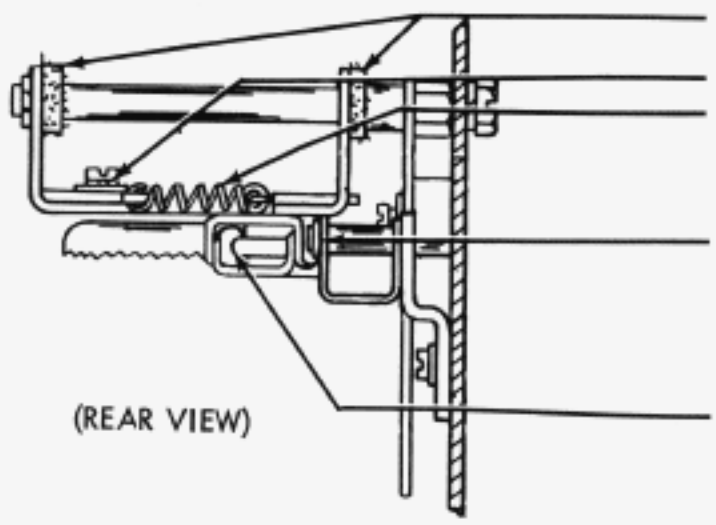

(REAR VIEW)

SAT	FELT WASHERS (2 WASHERS)	RIBBON FEED LEVER BAIL
02	BEARING SURFACE	RIBBON LEVER
0	HOOKS-EACH END	SPRING
02	BEARING SURFACES	RATCHET FEED LEVER SHAFT
02	BEARING SURFACE (2 PLACES)	RIBBON DETENT LEVER SHAFT

5.13 RIBBON FEED MECHANISM (continued)

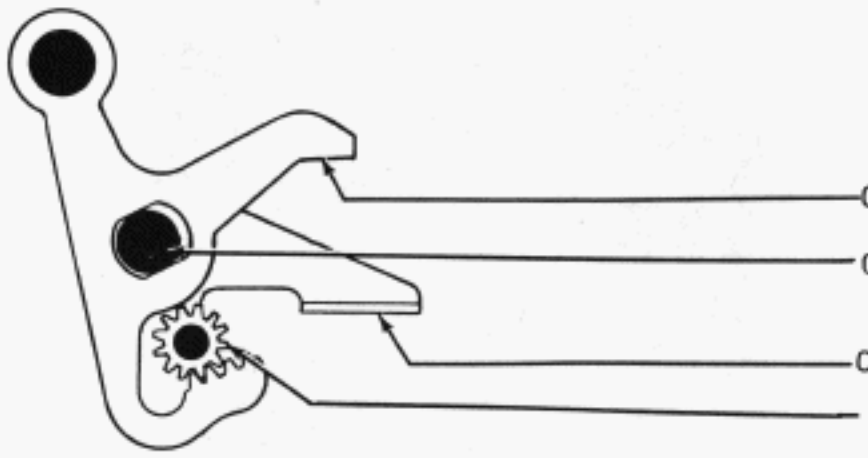

02	ENGAGING SURFACE	RIBBON REVERSING LEVER
02	BEARING SURFACE	RIBBON REVERSE LEVERS
02	ENGAGING SURFACE	RIBBON REVERSE LEVER
G	TEETH	RIBBON REVERSE SPUR GEAR

5.14 VERTICAL POSITIONING MECHANISM (RIGHT SIDE)

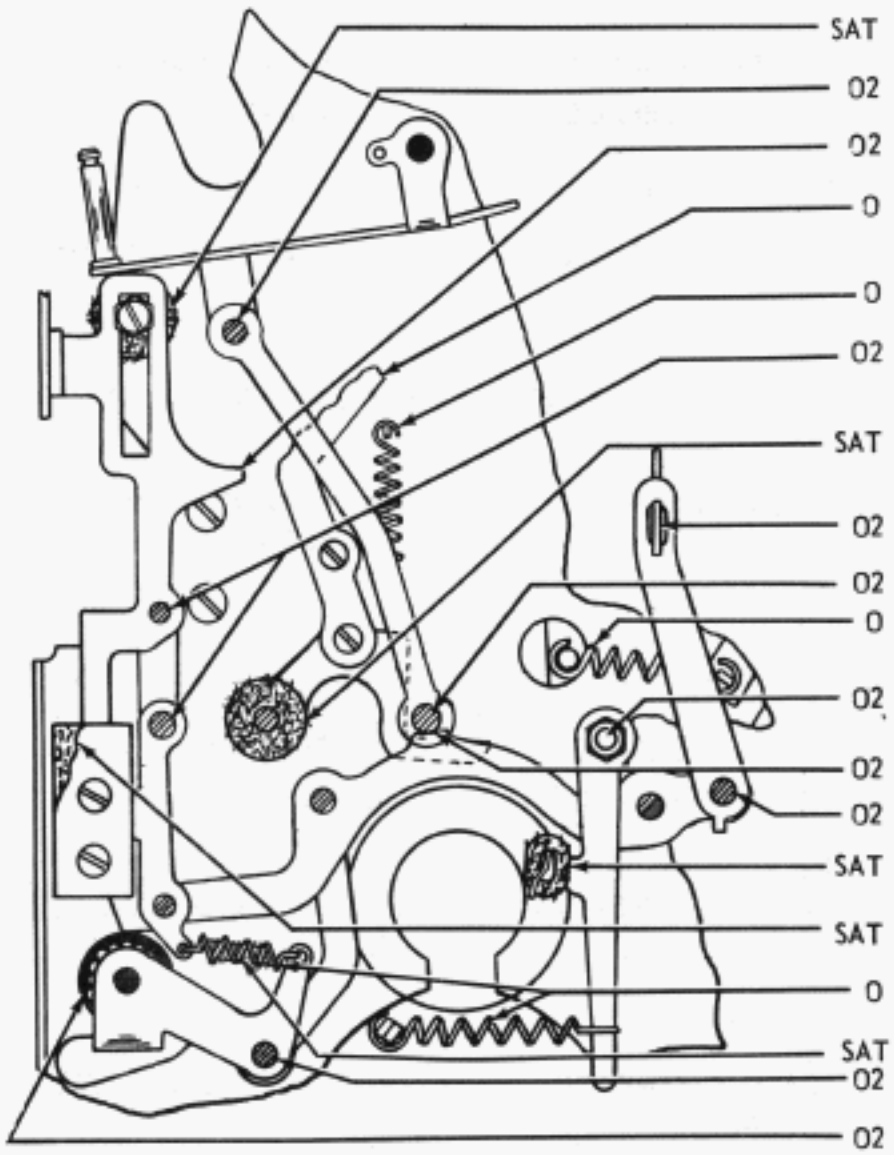

SAT	FELT WASHER	VERTICAL POSITIONING LEVER
02	BEARING SURFACE	RIBBON DRIVE LINK
02	ENGAGING SURFACE	VERTICAL POSITIONING LEVER
0	ENGAGING SURFACES (4 PLACES)	VERTICAL POSITIONING LOCK LEVER
0	HOOKS–EACH END	SPRING
02	BEARING SURFACES (2 PLACES)	VERTICAL POSITIONING LEVER
SAT	FELT WASHERS (2 WASHERS)	MAIN SIDE LEVER FOLLOWER ARM
02	GUIDING SURFACE	STRIPPER BLADE
02	BEARING SURFACE	RIBBON DRIVE LINK
0	HOOKS–EACH END	SPRING
02	BEARING SURFACE	CODE BAR CLUTCH TRIP SHAFT OPERATING LEVER
02	ENGAGING SURFACE	MAIN SIDE LEVER FOLLOWER ARM
02	BEARING SURFACE	STRIPPER BLADE ARM
SAT	FELT WASHER	CODE BAR CLUTCH TRIP SHAFT OPERATING LEVER EXTENSION
SAT	FELT OILER	VERTICAL POSITIONING LEVER
0	HOOKS–EACH END (2 SPRINGS)	SPRING
SAT	FELT WICK	SPRING WICK
02	BEARING SURFACE	ROCKER SHAFT BRACKET
02	BALL BEARING	MAIN ROCKER SHAFT

5.15 RIBBON FEED MECHANISM (LEFT SIDE)

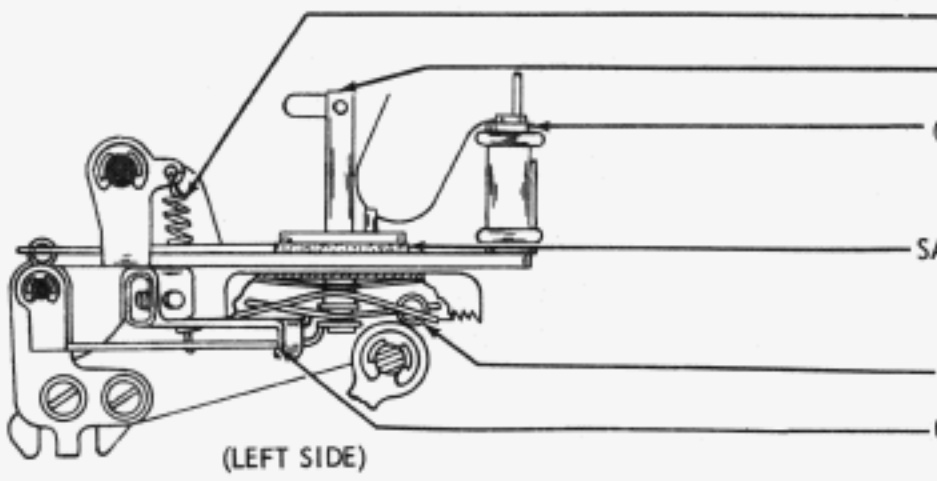

O	HOOKS–EACH END	SPRING
O	BEARING SURFACE	RIBBON SPOOL SHAFT
O2	BEARING SURFACE	RIBBON ROLLER SHAFT
SAT	FELT WASHER	RIBBON SPOOL SHAFT
O	HOOKS - EACH END	SPRING
O2	ENGAGING SURFACE	RIBBON DETENT LEVER

(LEFT SIDE)

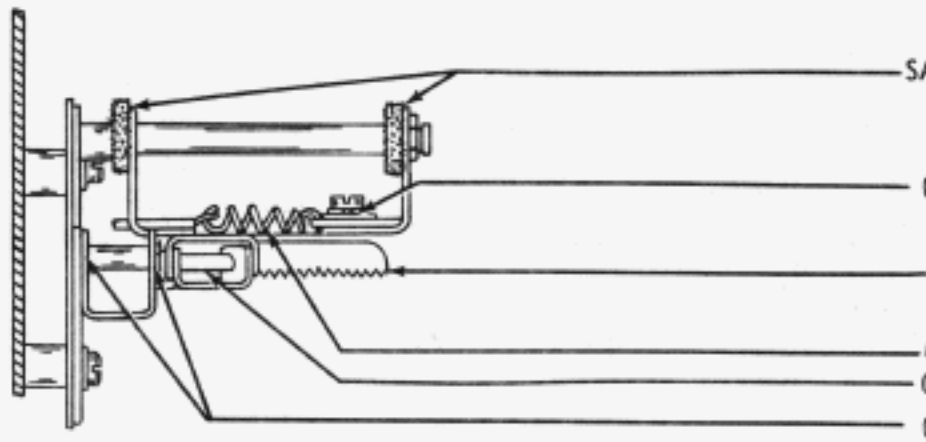

SAT	FELT WASHERS (2 WASHERS)	RIBBON FEED LEVER BAIL
O2	BEARING SURFACE	RIBBON REVERSE LEVER
G	TEETH	RIBBON RATCHET WHEEL
O	HOOKS - EACH END	SPRING
O2	ENGAGING SURFACE	RIBBON DETENT LEVER SHAFT
O2	BEARING SURFACES (2 PLACES)	RATCHET FEED LEVER SHAFT

(REAR VIEW)

5.16 RIBBON FEED MECHANISM (Continued)

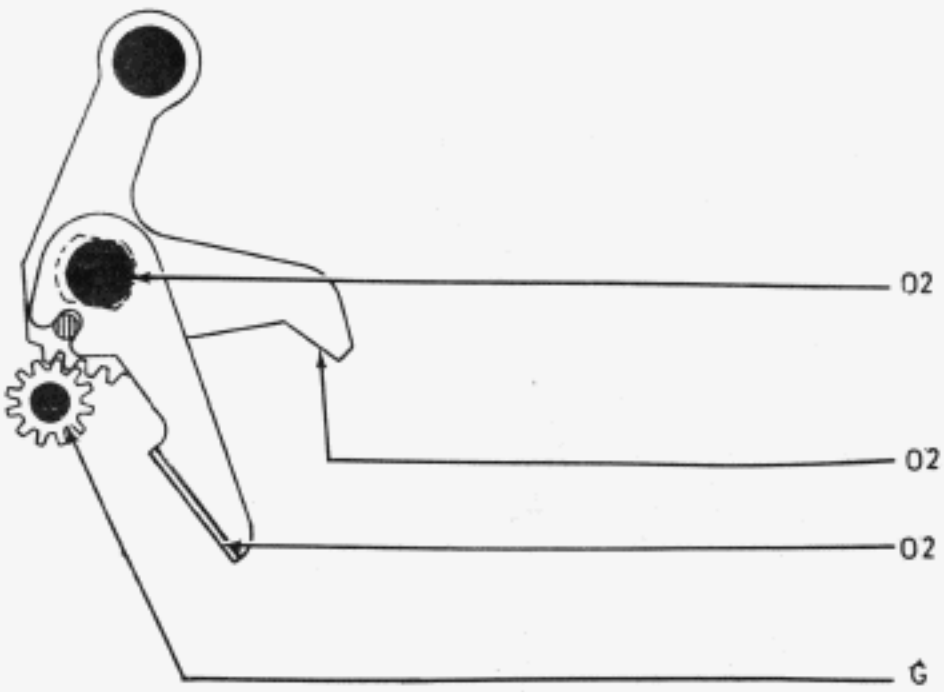

O2	BEARING SURFACE	RIBBON REVERSE LEVER
O2	ENGAGING SURFACE	RIBBON REVERSING LEVER
O2	ENGAGING SURFACE	RIBBON REVERSE LEVER
G	TEETH	RIBBON REVERSE SPUR GEAR

5.17 VERTICAL POSITIONING MECHANISM (LEFT SIDE)

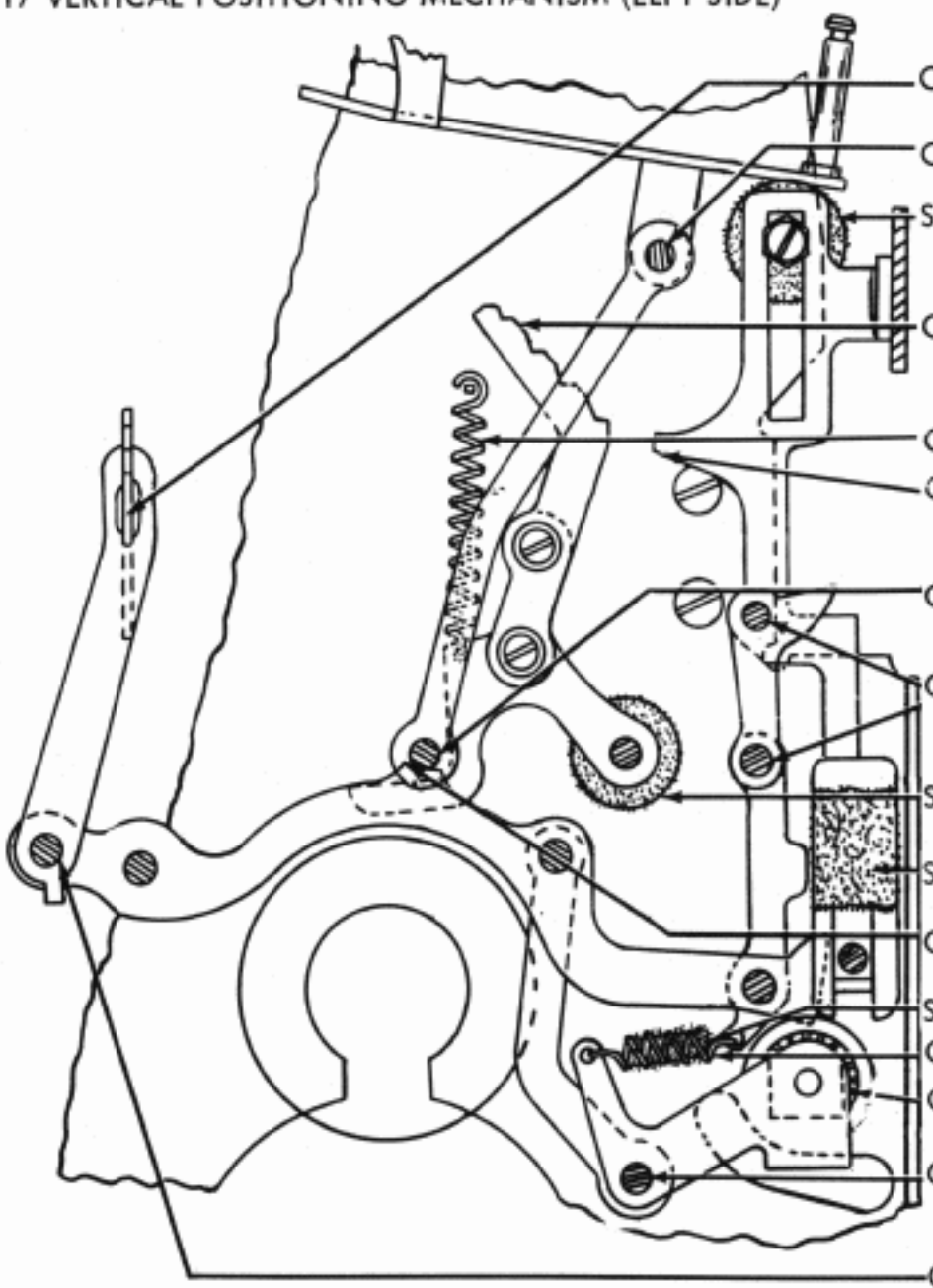

O2	GUIDING SURFACE	STRIPPER BLADE
O2	BEARING SURFACE	RIBBON DRIVE LINK
SAT	FELT WASHER	VERTICAL POSITIONING LINK
O	ENGAGING SURFACES (4 PLACES)	VERTICAL POSITIONING LOCK LEVER
O	HOOKS - EACH END	SPRING
O2	ENGAGING SURFACE	VERTICAL POSITIONING LEVER
O2	BEARING SURFACE	RIBBON DRIVE LINK
O2	BEARING SURFACES (2 PLACES)	VERTICAL POSITIONING LEVER
SAT	FELT WASHERS (2 WASHERS)	MAIN SIDE LEVER FOLLOWER ARM
SAT	FELT OILER	VERTICAL POSITIONING LEVER
O2	CAMMING SURFACE	MAIN SIDE LEVER FOLLOWER ARM
SAT	FELT WICK	SPRING WICK
O	HOOKS - EACH END	SPRING
O2	BALL BEARING	MAIN ROCKER SHAFT
O2	BEARING SURFACE	ROCKER SHAFT BRACKET
O2	BEARING SURFACE	STRIPPER BLADE ARM

5.18 REST TYPING UNIT IN UPRIGHT POSITION

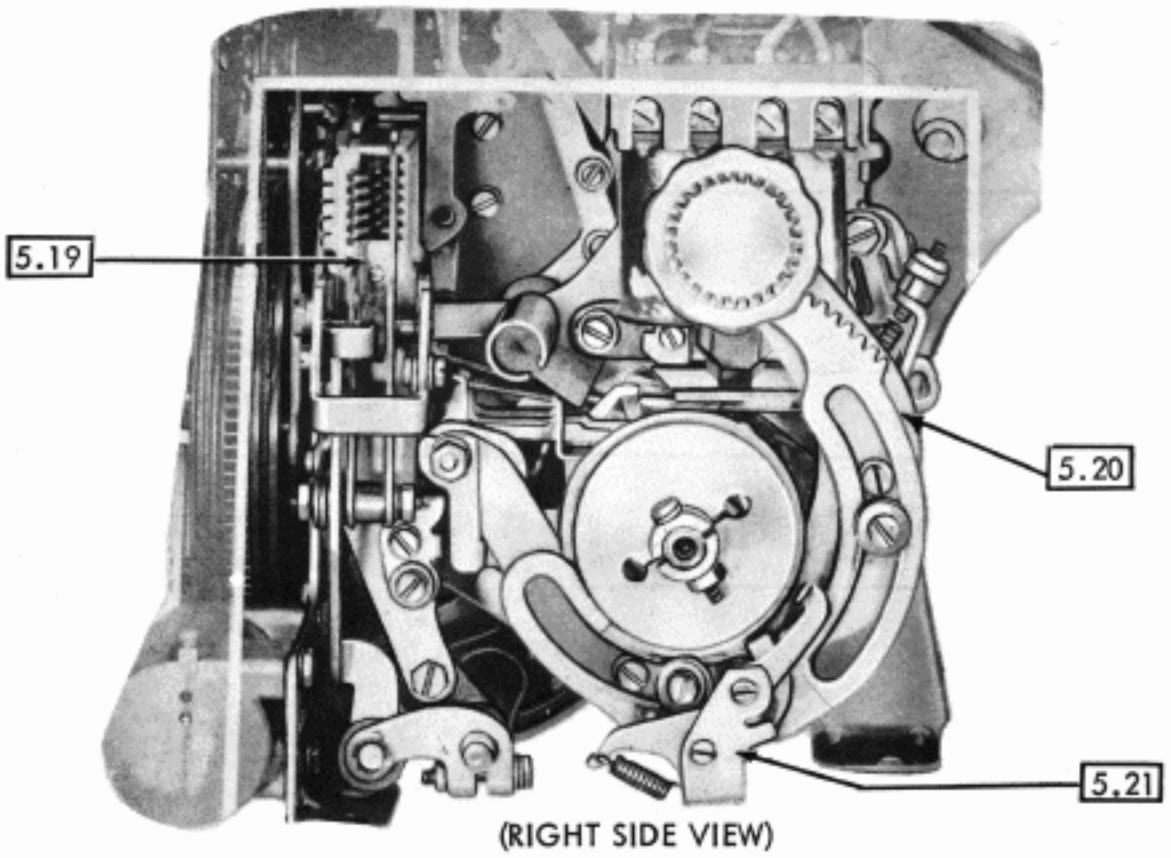

(RIGHT SIDE VIEW)

5.19 CODE BAR MECHANISM

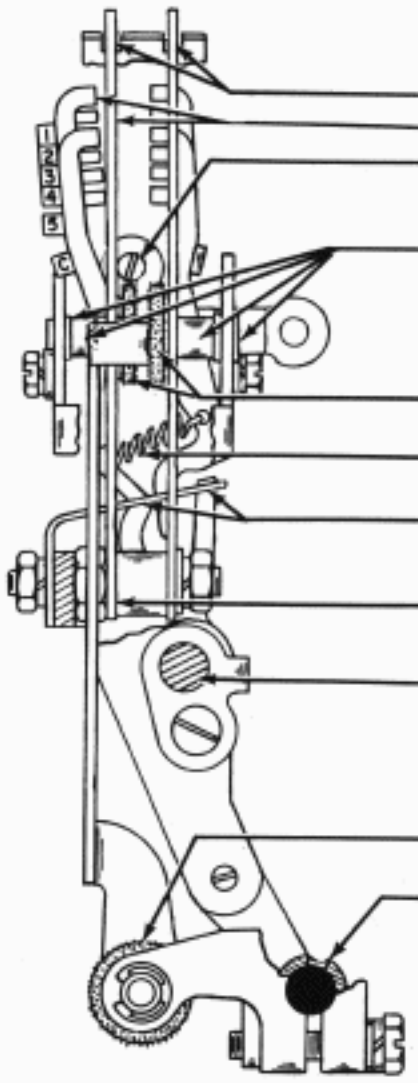

O2	GUIDE SLOTS	SHIFT LEVERS
O2	ENGAGING SURFACE	SHIFT AND TRANSFER LEVERS
O2	BEARING GUIDE SLOTS (6 SLOTS)	TRANSFER LEVER GUIDE BEARING
O2	ROLLER BEARINGS (4 ROLLERS)	SHIFT LEVER LINK ROLLERS
SAT	FELT WASHERS (2 WASHERS)	SHIFT LEVER LINK SHAFT
O	HOOKS–EACH END (5 SPRINGS)	SPRING
O2	GUIDE SLOTS (5 SLOTS)	INTERMEDIATE ARMS AND TRANSFER LEVERS
O2	BEARING SURFACES (2 PLACES)	SHIFT LEVERS
O2	BEARING GUIDE SLOTS (5 SLOTS)	INTERMEDIATE ARM GUIDE BEARING
SAT	FELT WASHER	SHIFT LEVER LINK
O3	OIL HOLE	SHIFT LEVER DRIVE ARM SHAFT

5.20 SELECTOR MECHANISM

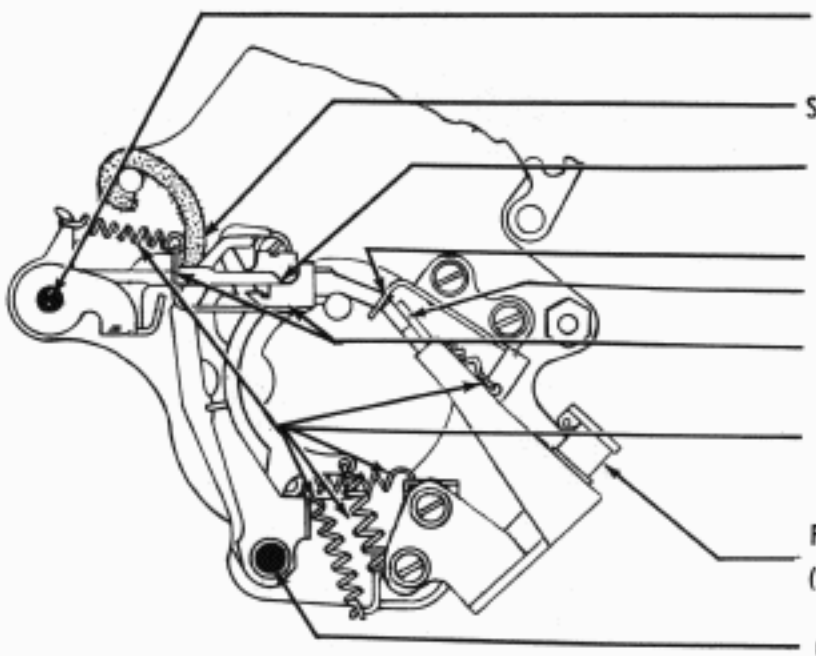

O2	BEARING GUIDE SLOTS (5 SLOTS)	PUSH LEVER GUIDE BEARING
SAT	FELT WICK	SELECTOR WICK
O2	ENGAGING SURFACES (5 LEVERS)	PUSH LEVERS
O2	GUIDE SLOT	MARKING LOCK LEVER
O2	WICK	LUBRICATOR WICK
O2	GUIDE SLOTS	SELECTOR AND PUSH LEVERS
O	HOOKS–EACH END (12 SPRINGS)	SPRINGS
	FILL CUP (AVOID AIR LOCK)	LUBRICATOR RESERVOIR
O2	BEARING GUIDE SLOTS (6 SLOTS)	SELECTOR LEVER GUIDE BEARING

5.21 SELECTOR MECHANISM (Continued)

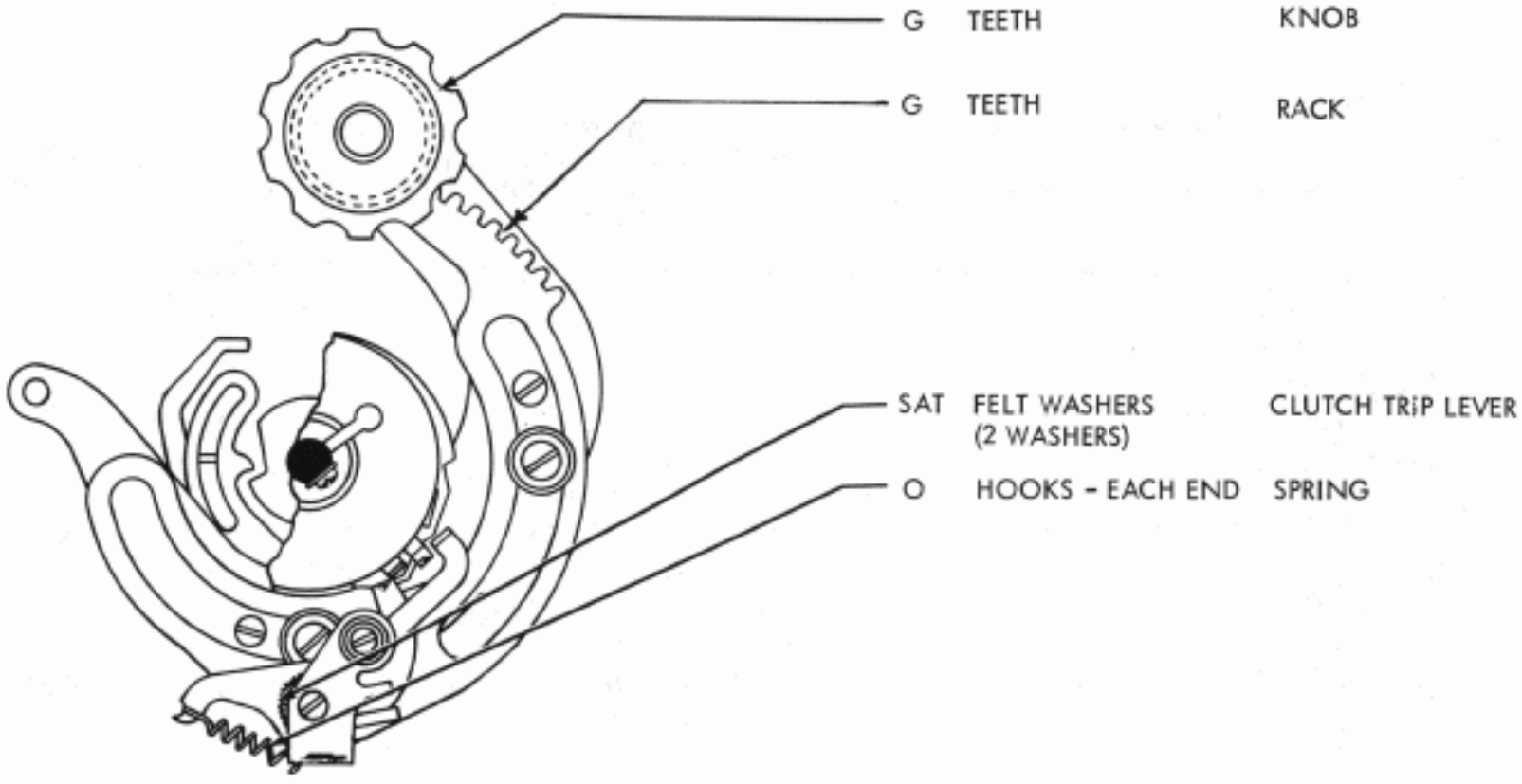

5.22 STUNT BOX MECHANISM

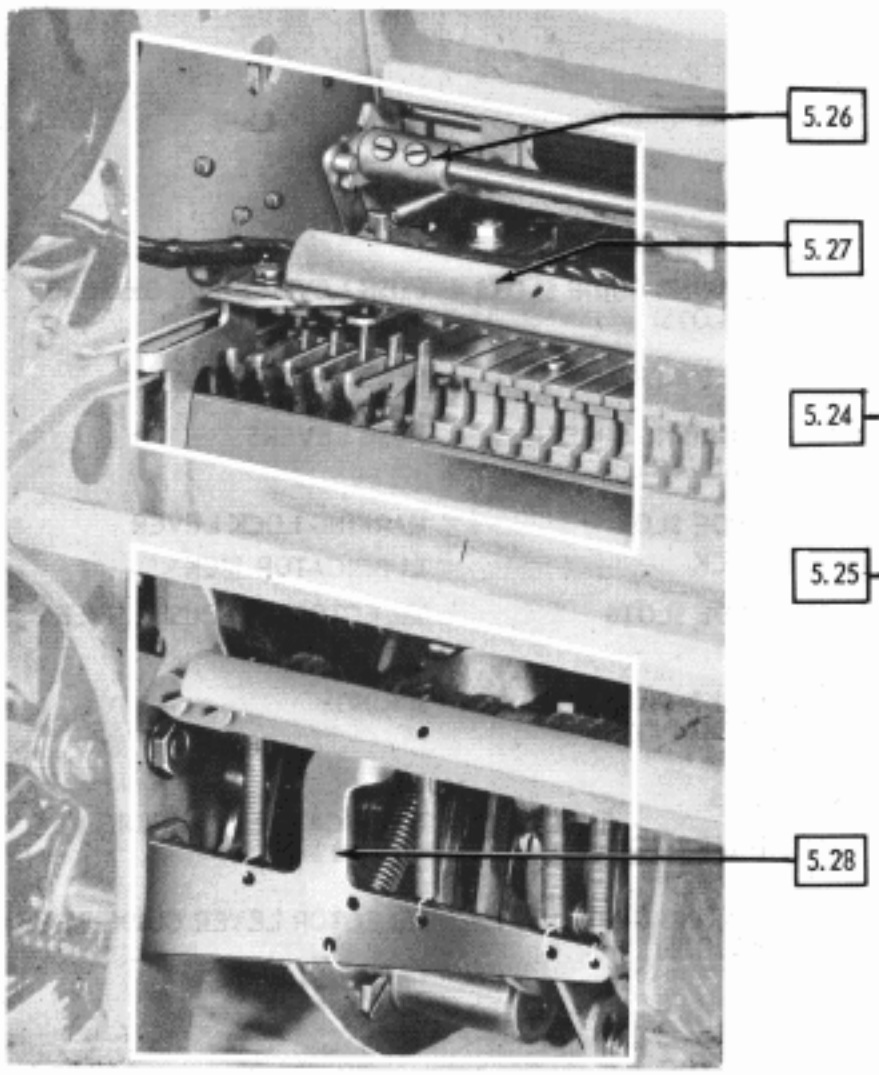

(REAR VIEW)

5.23 STUNT BOX MECHANISM

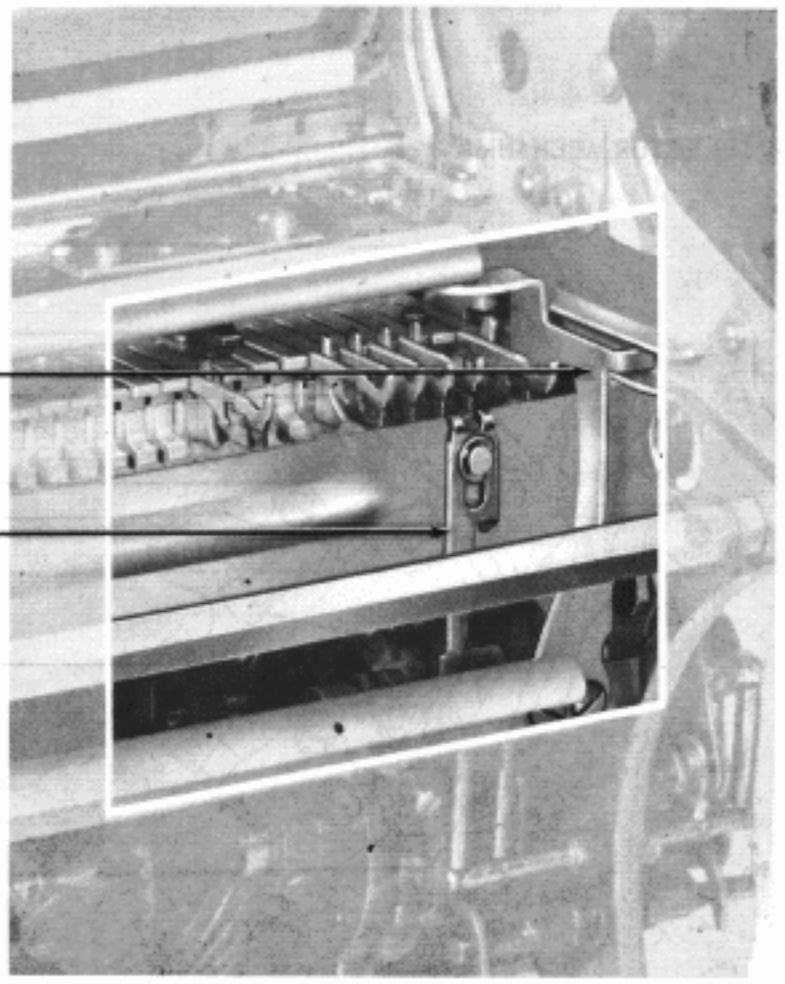

(REAR VIEW)

5.24 STUNT BOX MECHANISM

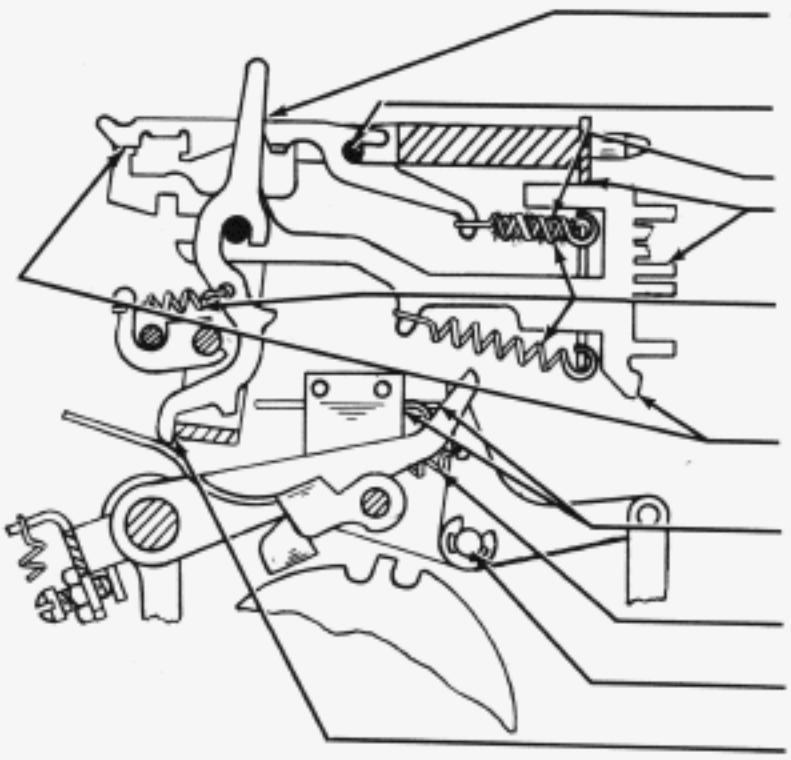

O2	GUIDE SLOTS (11 LEVERS)	FUNCTION LEVERS
O2	GUIDE SLOTS (11 PAWLS)	FUNCTION PAWLS
SAT	EACH FELT WICK	FUNCTION PAWL SPRINGS
O2	GUIDE SLOTS (11 LEVERS)	FUNCTION BARS
O	HOOKS - EACH END (33 SPRINGS)	SPRING
O2	ENGAGING SURFACES (FRONT & REAR - 11 BARS)	FUNCTION BARS
O2	GUIDE AND ENGAGING SURFACES	LINE FEED SLIDE ARM
O	HOOKS - EACH END	SPRING
O2	BEARING SURFACE	KEYBOARD LOCK LEVER
O2	ENGAGING SURFACES (11 LEVERS)	FUNCTION LEVERS

5.25 STRIPPER BLADE MECHANISM

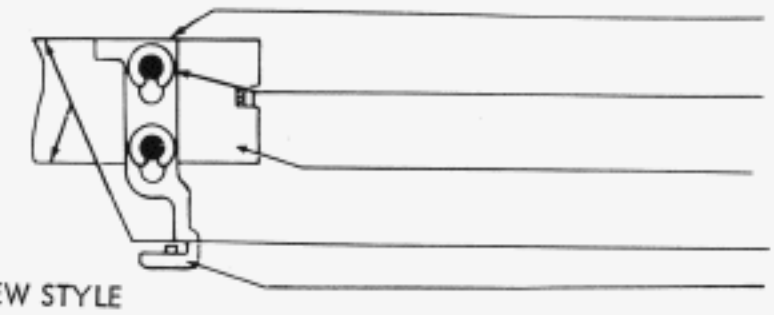

O	ENGAGING SURFACE	LINE FEED STRIPPER SLIDE
O2	GUIDE SURFACES (2 PLACES)	STRIPPER SLIDE
O2	GUIDE SURFACES (EACH END)	STRIPPER BLADE
G	ENGAGING SURFACES	STRIPPER BLADE
O2	ENGAGING SURFACE	STRIPPER BLADE

NEW STYLE

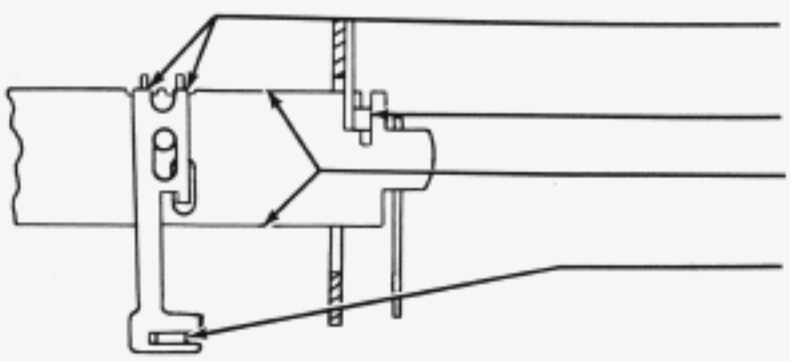

O	ENGAGING SURFACES (2 PLACES)	LINE FEED FUNCTION PAWL STRIPPER
O2	GUIDING SURFACE	STRIPPER BLADE
G	UPPER AND LOWER WORKING SURFACES	STRIPPER BLADE
O2	GUIDING SURFACE	STRIPPER BAIL

OLD STYLE

5.26 RIBBON REVERSE MECHANISM

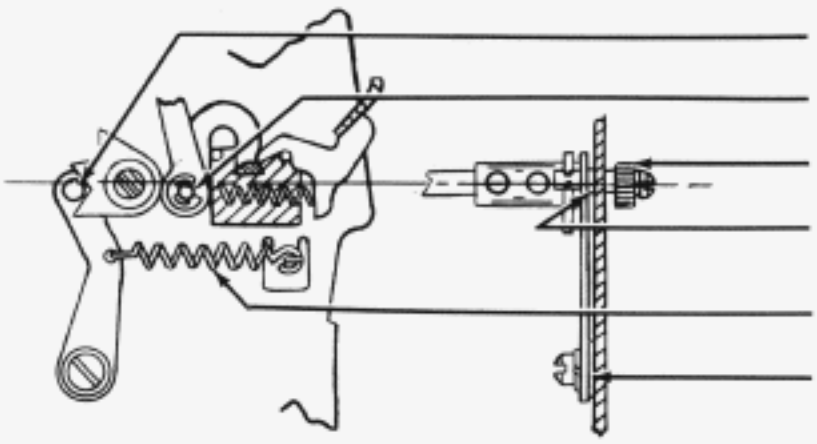

O2	ENGAGING SURFACE	RIBBON REVERSE DETENT
O2	BEARING SURFACE	PAPER RELEASE LEVER
G	TEETH	RIBBON REVERSE SPUR GEAR
O2	BEARING (RIGHT & LEFT)	RIBBON REVERSE SHAFT
O	HOOKS - EACH END	SPRING
O2	BEARING SURFACE	RIBBON REVERSE DETENT LEVER

5.27 SHIFT MECHANISM

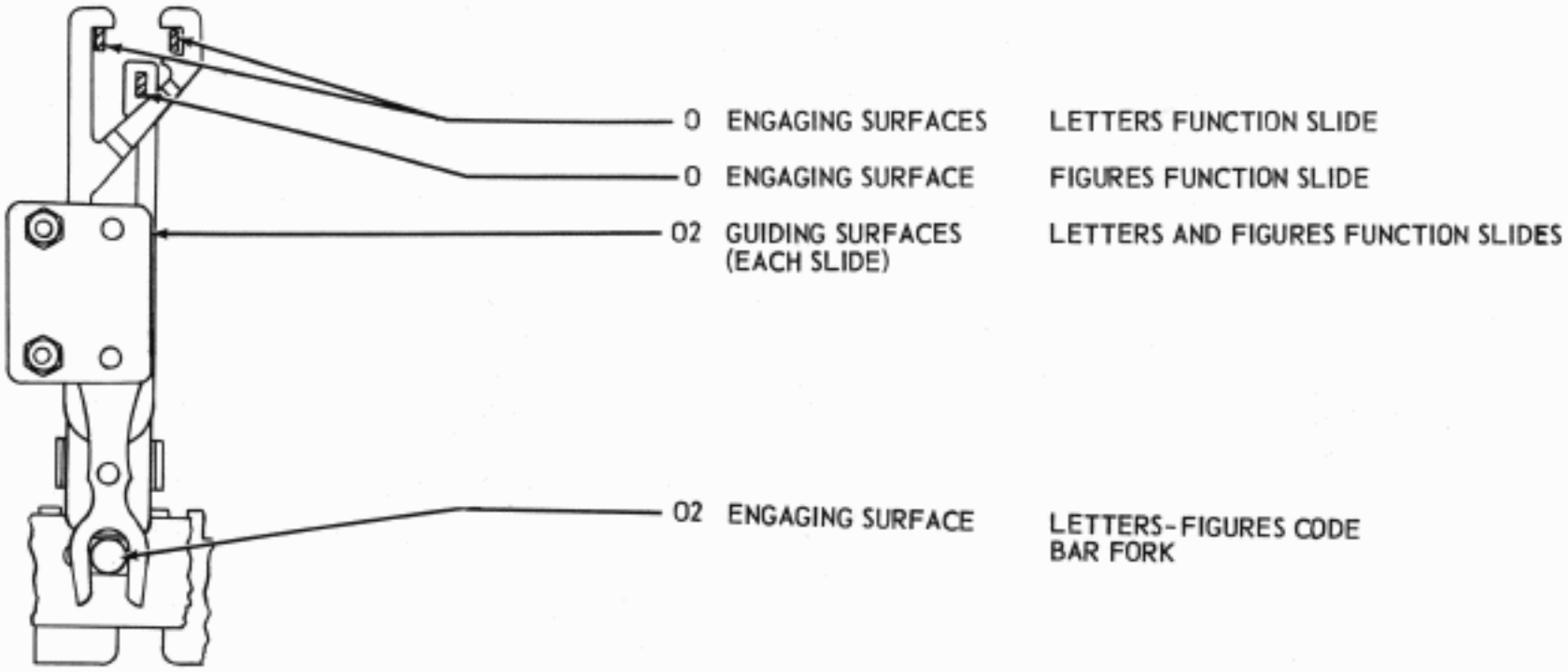

5.28 FUNCTION ROCKER SHAFT MECHANISM

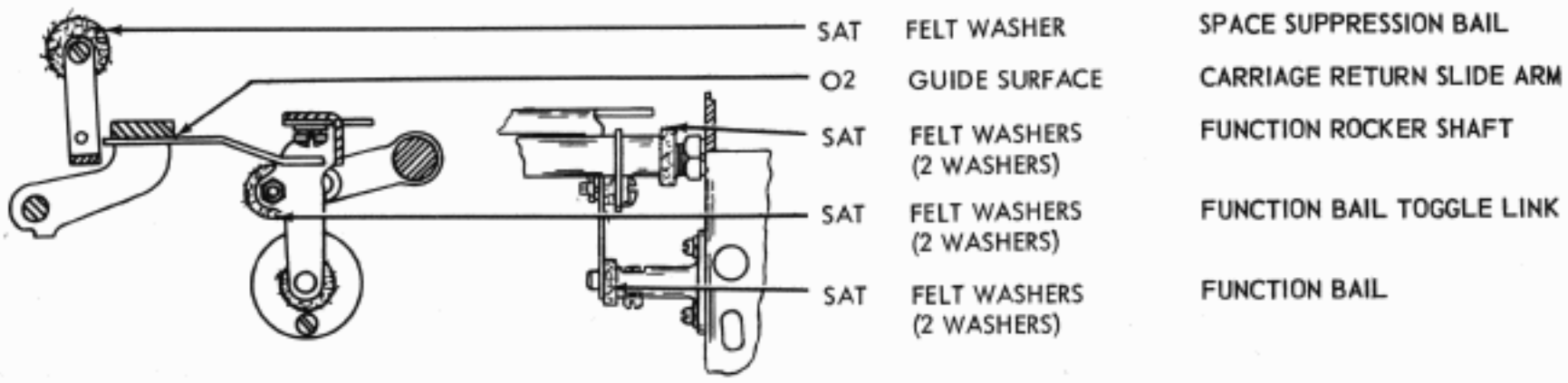

5.29 REST TYPING UNIT ON ITS BACK

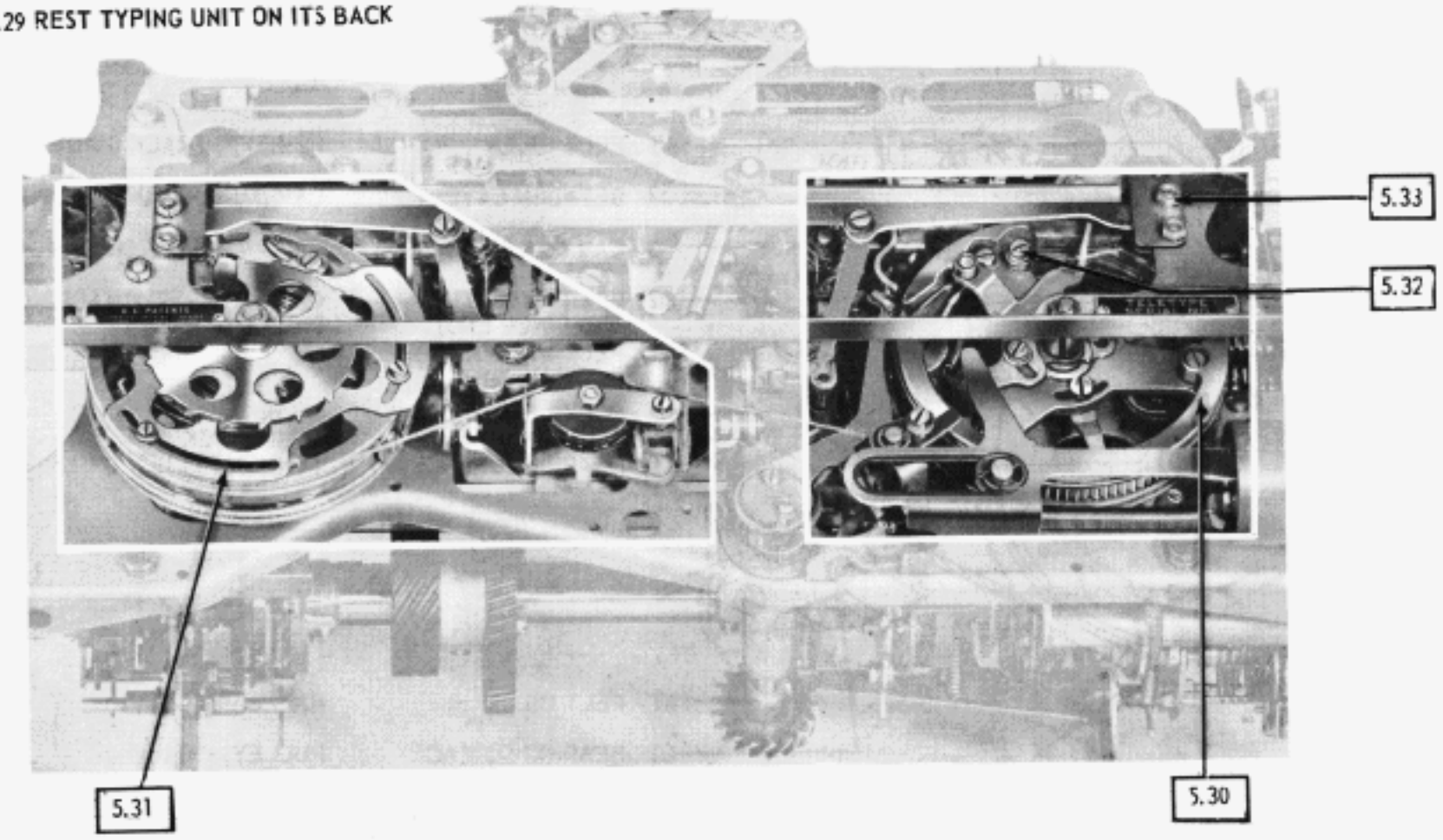

5.30 SPACING DRUM DRIVE MECHANISM (EARLIER DESIGN)

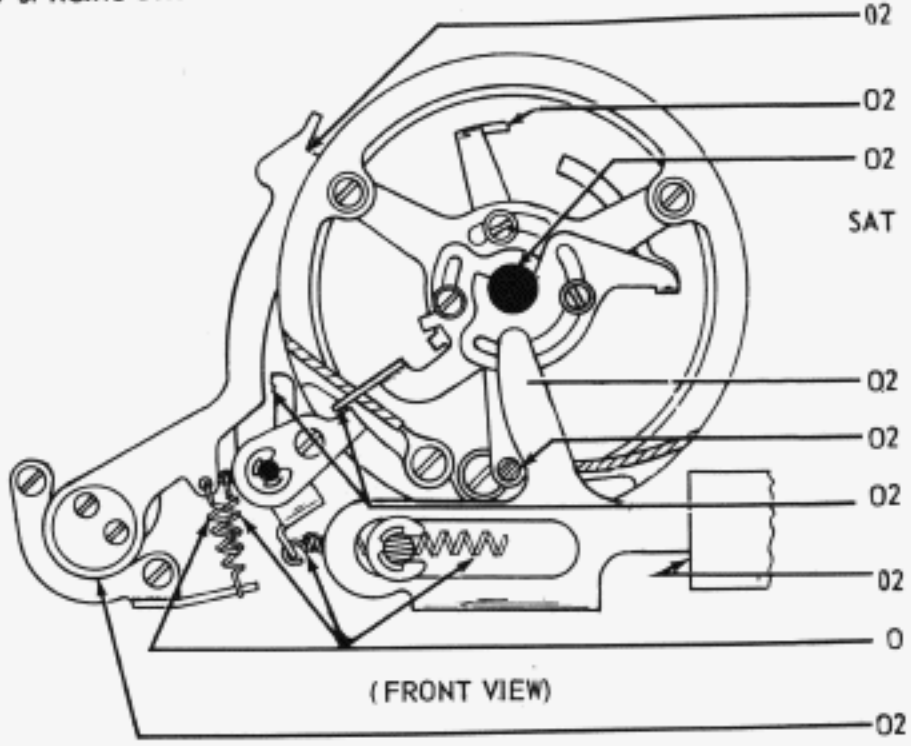

O2	ENGAGING SURFACE (2 PAWL)	SPACE PAWLS
O2	ENGAGING SURFACE	SPACING CUTOUT LEVER
O2	BEARING (OUTER AND INNER END)	SPACING DRUM SHAFT
SAT	FELT WASHER	
O2	ENGAGING SURFACE	TRANSFER SLIDE
O2	ROLLER BEARING	STOP ARM ROLLER
O2	ENGAGING SURFACES (2 PLACES)	CARRIAGE RETURN LATCH BAIL
O2	GUIDE SURFACE	DASH POT
O	HOOKS–EACH END (4 SPRINGS)	SPRING
O2	BEARING SURFACES (2 ECCENTRICS)	SPACING DRUM FEED PAWLS ECCENTRICS
O2	BEARING SURFACES (2 PLACES)	CARRIAGE RETURN LATCH BAIL
SAT	FELT WICK	SPRING WICK
O2	ROLLER BEARINGS (2 ROLLERS)	TRANSFER SLIDE ROLLERS
G	TEETH	SPACING DRUM RATCHET WHEEL
O2	CABLE GROOVES (2 PLACES)	SPACING DRUM

(SEE PARAGRAPH 6-08)

5.31 CARRIAGE RETURN MECHANISM

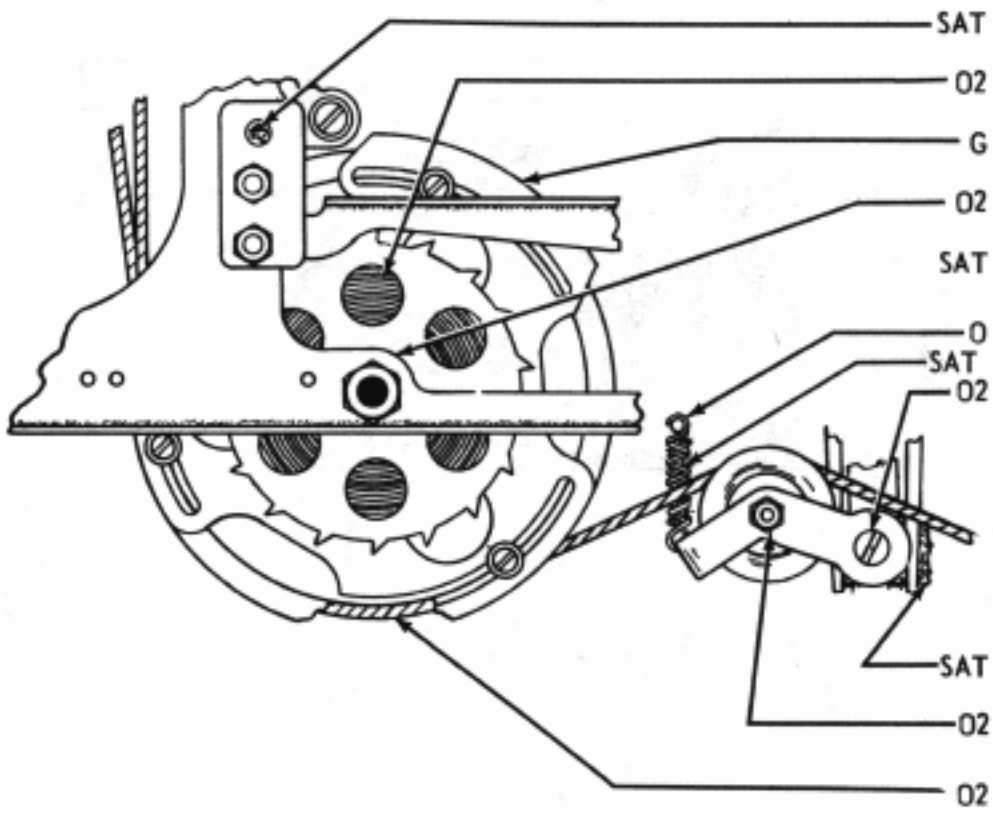

SAT	FELT OILER	PRINTING TRACK GUIDE
02	BETWEEN LAYERS	CARRIAGE RETURN SPRING
G	CAM DISK SURFACE	MARGIN INDICATOR CAM DISK
02	BEARING (OUTER AND INNER END)	CARRIAGE RETURN SPRING DRUM SHAFT
SAT	FELT WASHER	
O	HOOKS–EACH END	SPRING
SAT	FELT WICK	SPRING WICK
02	BEARING SURFACE	TENSION PULLEY BAIL
SAT	FELT OILER	MAIN BAIL
02	BEARING SURFACE	PULLEY
02	CABLE GROOVES	CARRIAGE RETURN SPRING DRUM

5.32 SPACING DRUM FEED MECHANISM

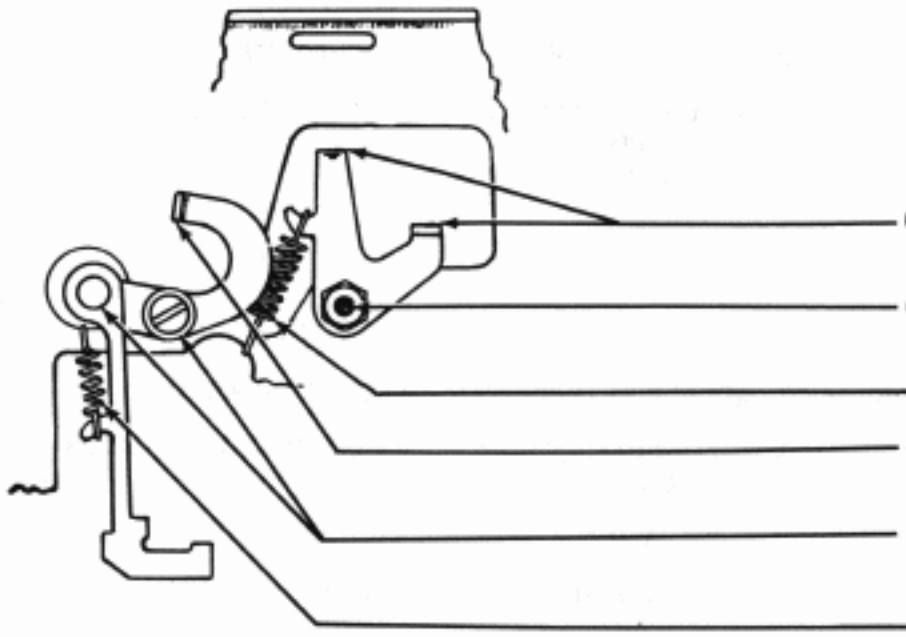

02	ENGAGING SURFACES (2 PLACES)	AUTOMATIC CARRIAGE RETURN BELL CRANK
02	BEARING SURFACE	AUTOMATIC CARRIAGE RETURN BELL CRANK
O	HOOKS–EACH END	SPRING
02	ENGAGING SURFACE	SPACING DRUM FEED PAWL RELEASE LINK
02	BEARING SURFACES (2 PLACES)	SPACING DRUM FEED PAWL RELEASE LINK
O	HOOKS–EACH END	SPRING

5.33 TRACK GUIDE MECHANISM

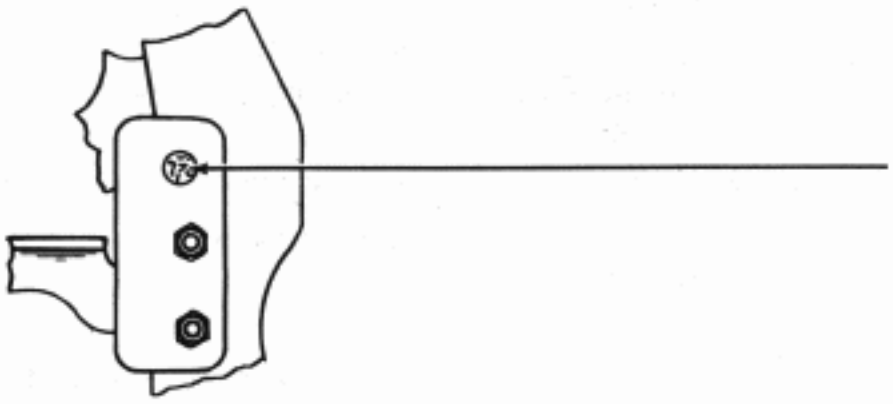

SAT	FELT OILER	PRINTING TRACK GUIDE

5.34 REST TYPING UNIT ON ITS BACK

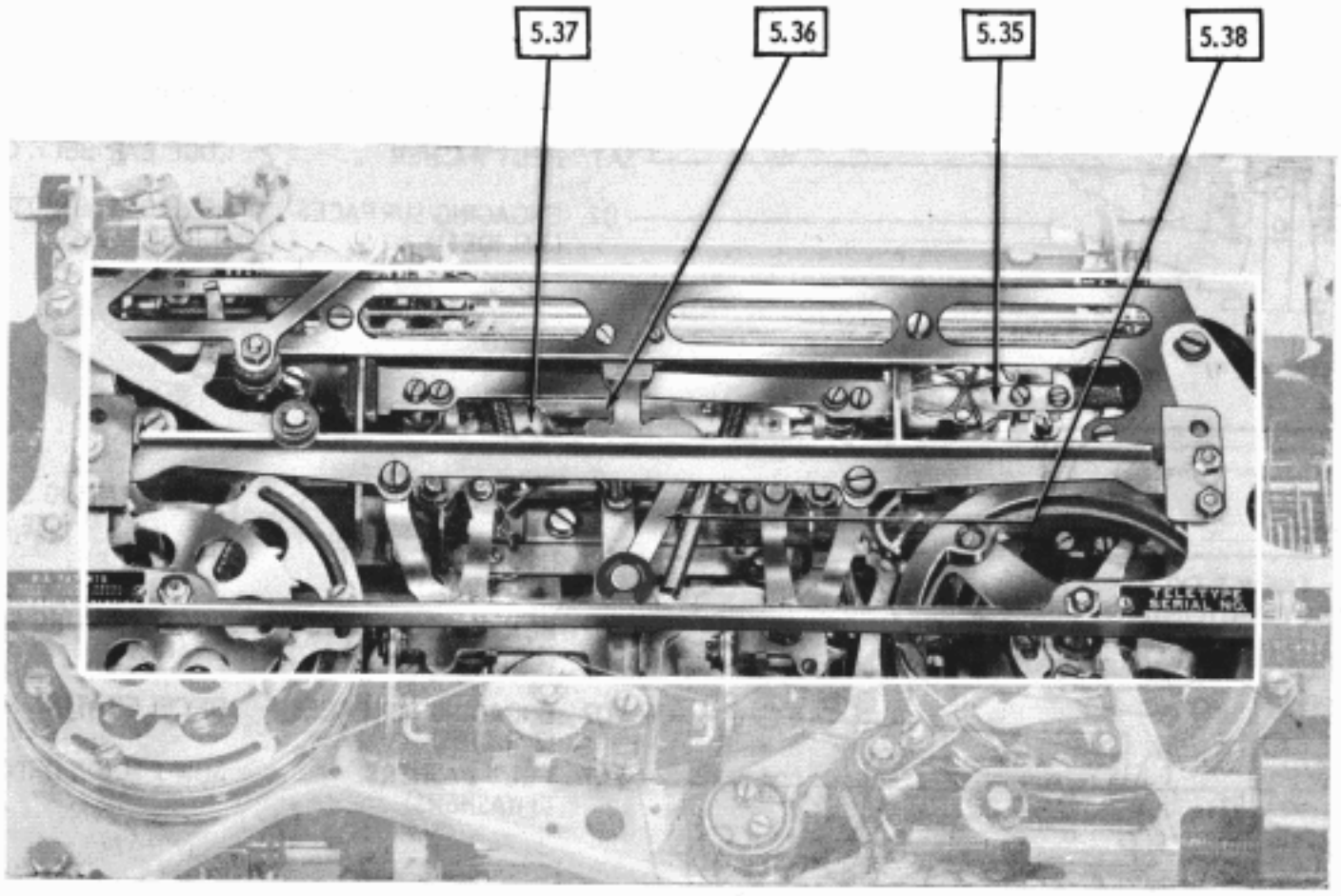

5.35 HORIZONTAL POSITIONING MECHANISM (FRONT VIEW)

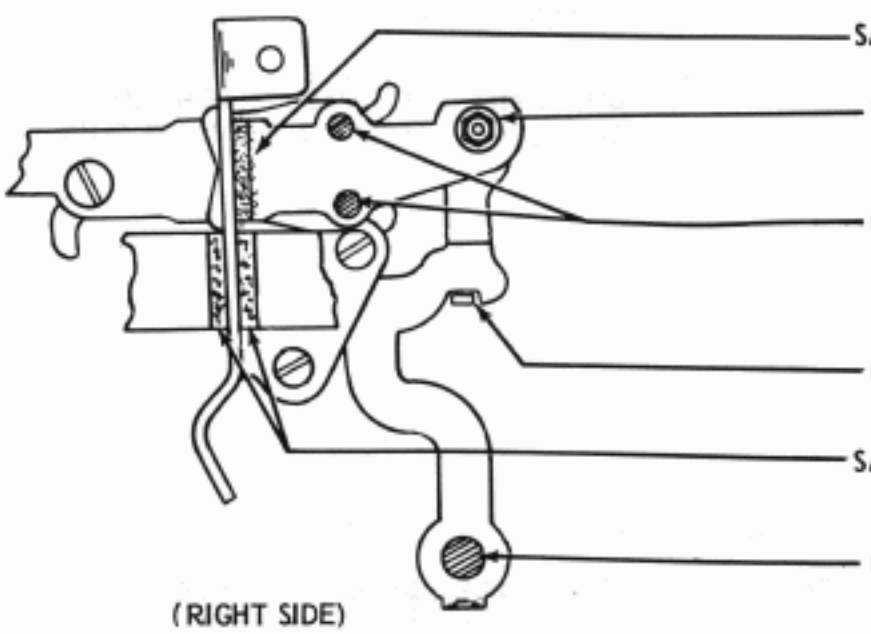

SAT	FELT WASHER	HORIZONTAL REVERSING SLIDE
02	ENGAGING SURFACE	HORIZONTAL REVERSING SLIDE SHIFT LEVER
02	DETENTS (2 DETENTS)	DETENT BAILS
02	ENGAGING SURFACE	HORIZONTAL REVERSING SLIDE SHIFT LEVER
SAT	FELT WASHERS (2 WASHERS)	OSCILLATING RAIL SHIFT SLIDE
02	BEARING SURFACE	HORIZONTAL REVERSING SLIDE SHIFT LEVER

(RIGHT SIDE)

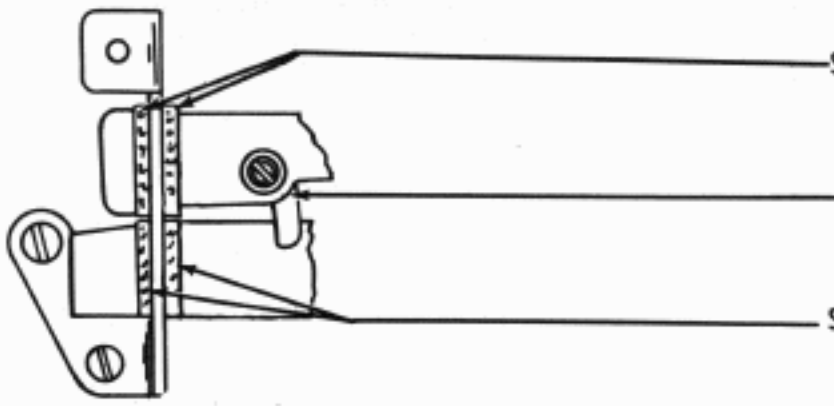

SAT	FELT WASHERS (2 WASHERS)	HORIZONTAL REVERSING SLIDE
02	ENGAGING SURFACES (2 PLACES)	HORIZONTAL REVERSING SLIDE
SAT	FELT WASHERS (2 WASHERS)	OSCILLATING RAIL SHIFT SLIDE

(LEFT SIDE)

5.36 HORIZONTAL POSITIONING MECHANISM (Continued)

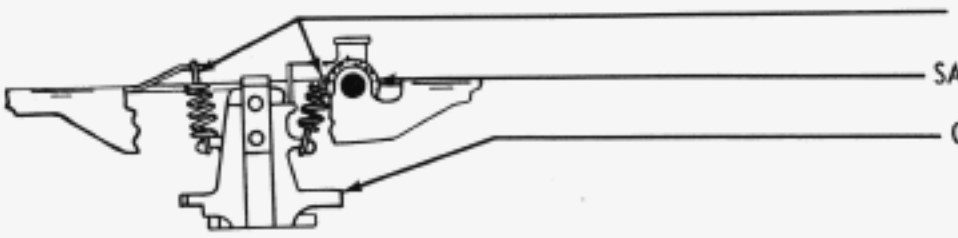

(TOP VIEW)

O	HOOKS–EACH END	SPRING
SAT	FELT WASHER	CODE BAR BELL CRANK
O2	ENGAGING SURFACES (3 SLIDES)	HORIZONTAL MOTION STOP SLIDES

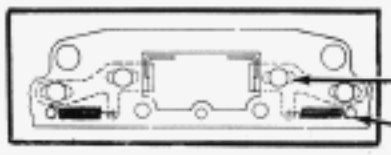

(NEW STYLE)

5.37 HORIZONTAL POSITIONING

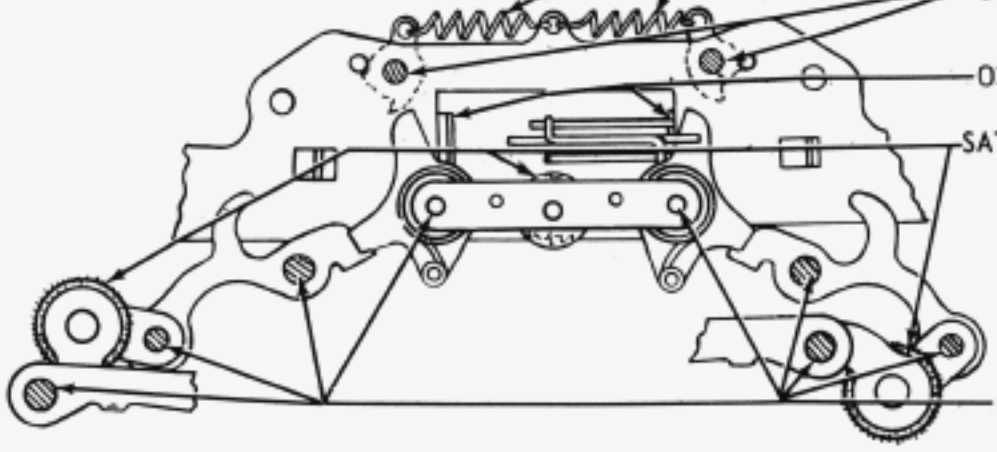

(FRONT VIEW)

O2	ENGAGING SURFACES	DECELERATING SLIDE (SEE NOTE 1)
O	HOOKS–EACH END (2 SPRINGS)	SPRING
O2	BEARING SURFACES (2 BELL CRANKS)	DECELERATING SLIDE BELL CRANKS
O2	ENGAGING SURFACES (2 SLIDES)	DECELERATING SLIDES (SEE NOTE 2)
SAT	FELT WASHERS (3 WASHERS)	SHIFT SLIDE DRIVE LINKS
O	BEARING SURFACES (8 PLACES)	SHIFT SLIDE DRIVE LINKS

NOTES
1. WITH SPRINGS LOCATED ON REAR SIDE OF SLIDE
2. WITH SPRINGS LOCATED ABOVE THE SLIDE

5. 38 HORIZONTAL POSITIONING MECHANISM (Continued)

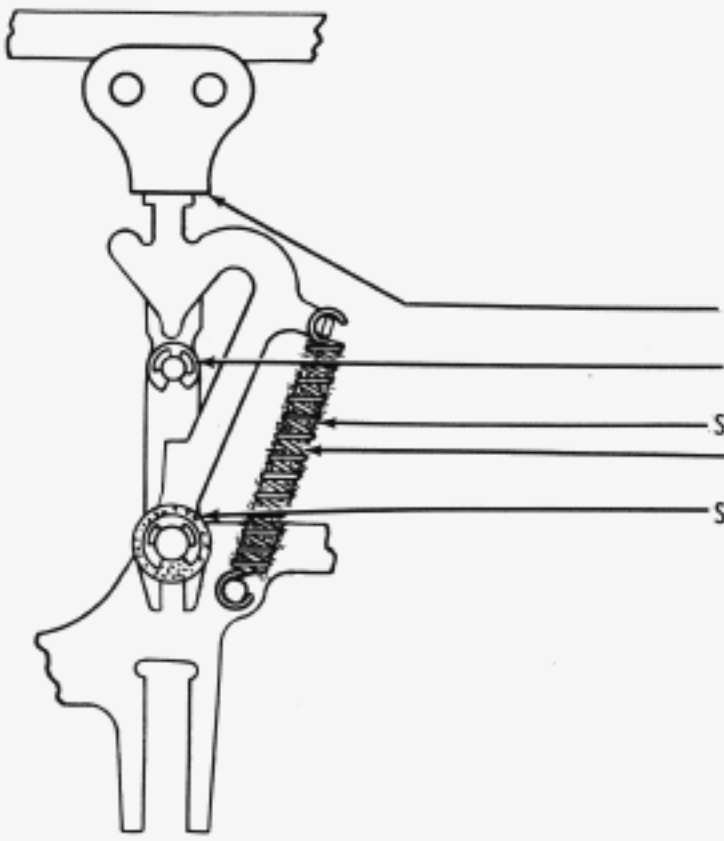

O2	GUIDING SURFACE	HORIZONTAL POSITIONING LOCK LEVER
O2	BEARING SURFACE	HORIZONTAL LOCK LEVER ARM ROLLER
SAT	FELT WICK	SPRING WICK
O	HOOKS–EACH END	SPRING
SAT	FELT WASHER	HORIZONTAL POSITIONING LOCK LEVER

5.39 REST TYPING UNIT IN UPRIGHT POSITION

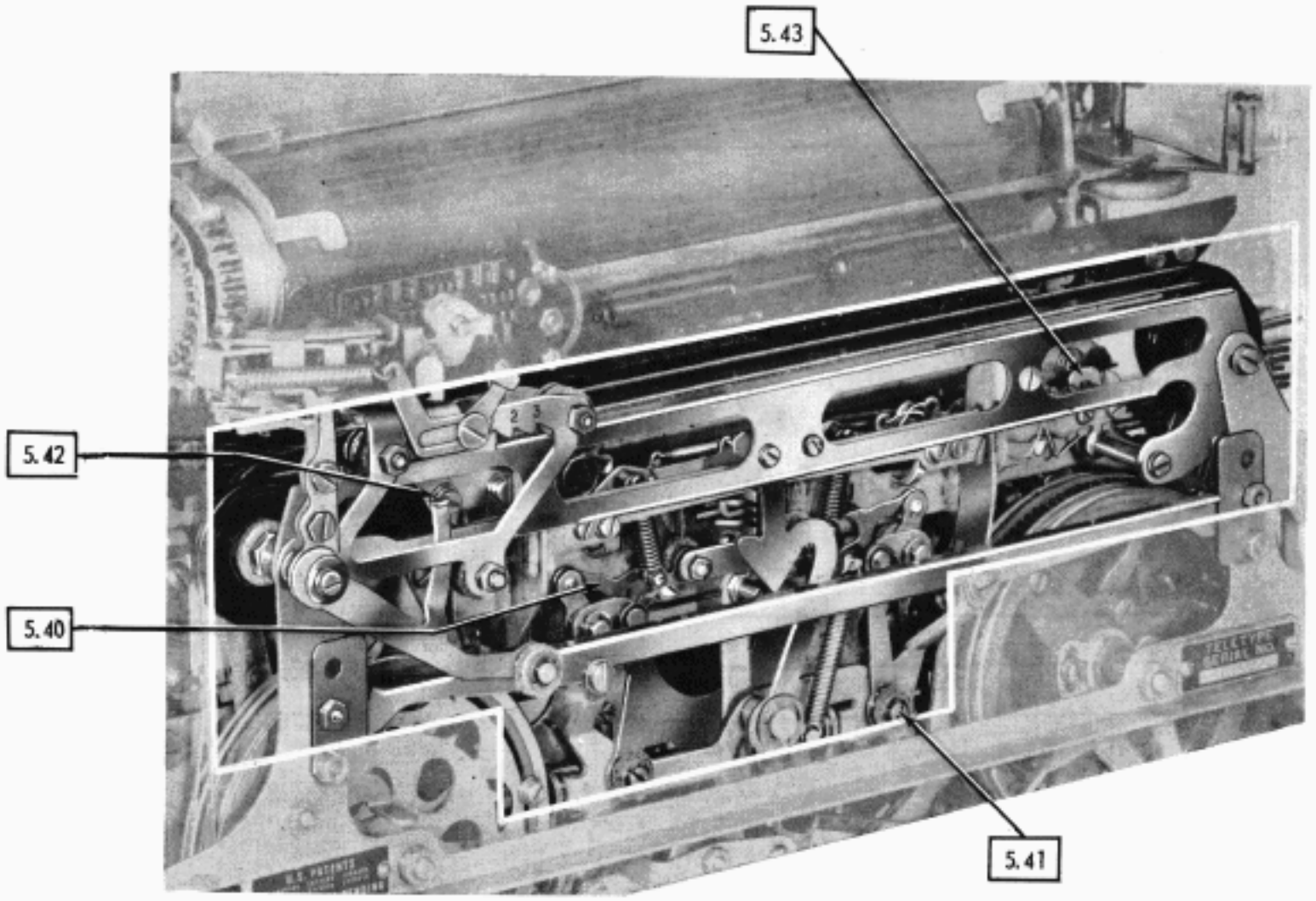

(FRONT VIEW)

5.40 LETTERS–FIGURES SHIFT MECHANISM

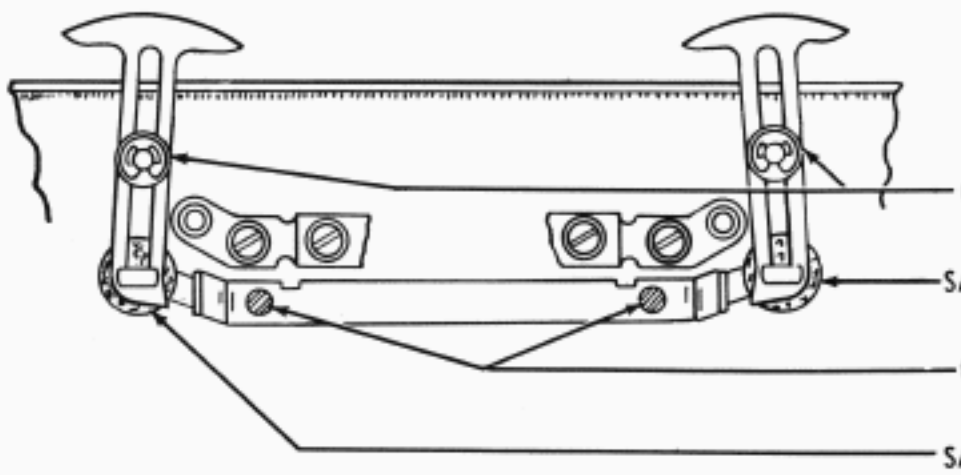

02	GUIDING SURFACES (2 SLIDES)	SHIFT LINK BREAKER SLIDE
SAT	FELT WASHER	LETTERS–FIGURES SHIFT SLIDE POST
02	BEARING SURFACE	LETTERS–FIGURES SHIFT SLIDE
SAT	FELT WASHER	LETTERS–FIGURES SHIFT SLIDE POST

5.41 LETTERS FIGURES SHIFT MECHANISM (continued)

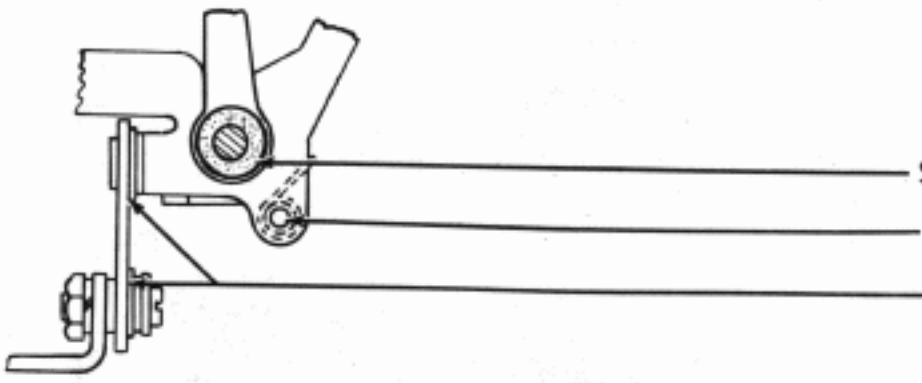

SAT	FELT WASHER	SHIFT SLIDE DRIVE LINK
02	BEARING SURFACE	BREAKER SLIDE BAIL
02	BEARING SURFACES (2 PLACES)	MAIN BAIL LINK

(RIGHT SIDE)

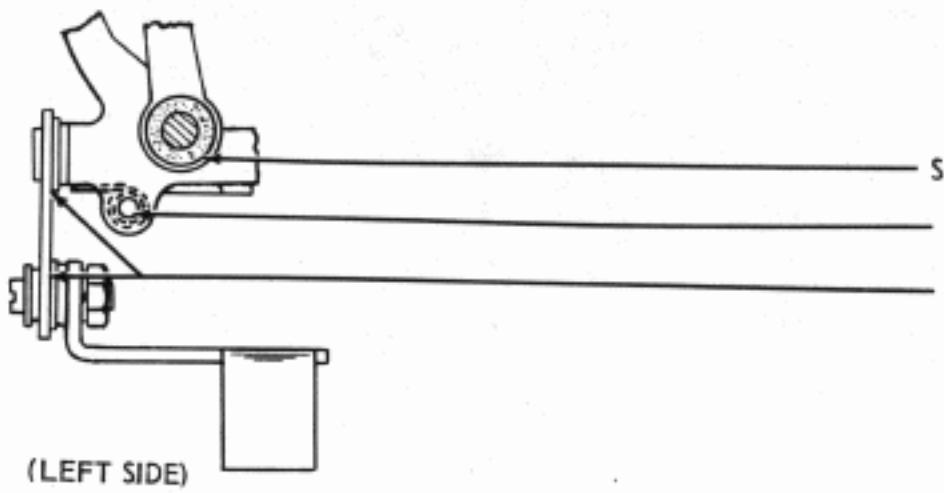

SAT	FELT WASHER	SHIFT SLIDE DRIVE LINK
02	BEARING SURFACE	BREAKER SLIDE BAIL
02	BEARING SURFACES (2 PLACES)	MAIN BAIL LINK

(LEFT SIDE)

5.42 OSCILLATING MECHANISM

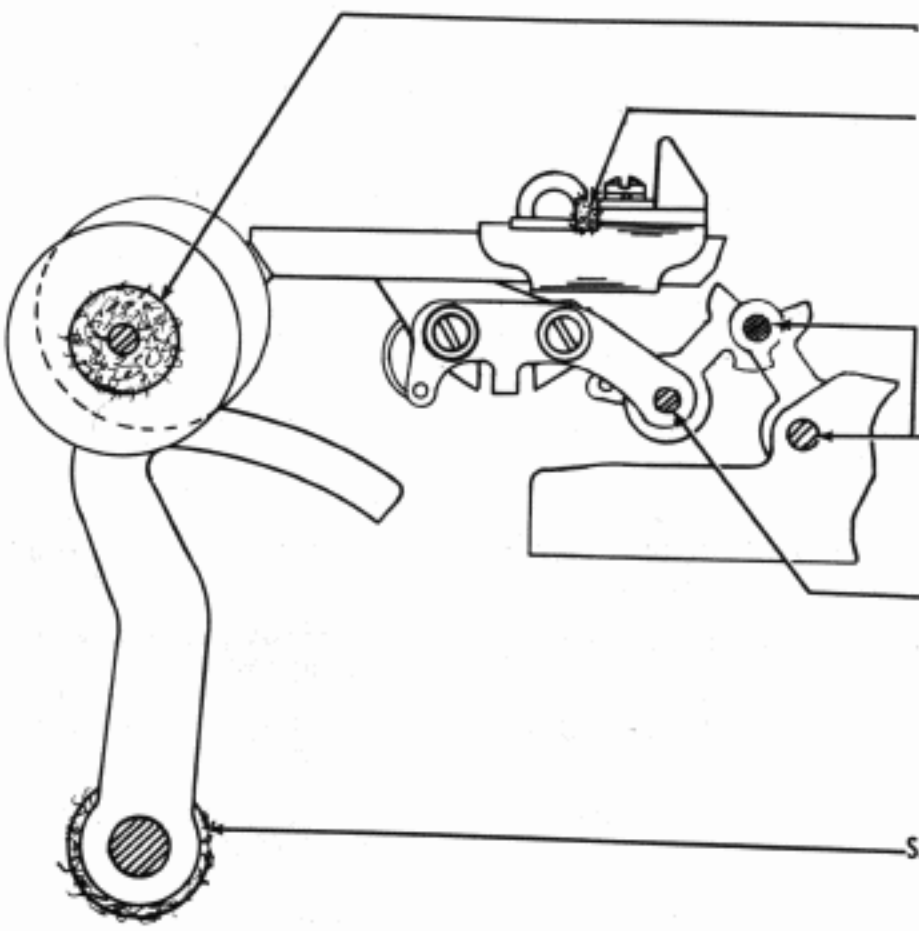

SAT	FELT WASHERS (3 WASHERS)	PULLEYS
SAT	FELT OILER	OSCILLATING RAIL SLIDE
02	BEARING SURFACE	OSCILLATING RAIL SHIFT LINK
02	BEARING SURFACE	OSCILLATING RAIL SHIFT LINK
SAT	FELT WASHER	OSCILLATING RAIL GUIDE ARM

5.43 OSCILLATING MECHANISM (Continued)

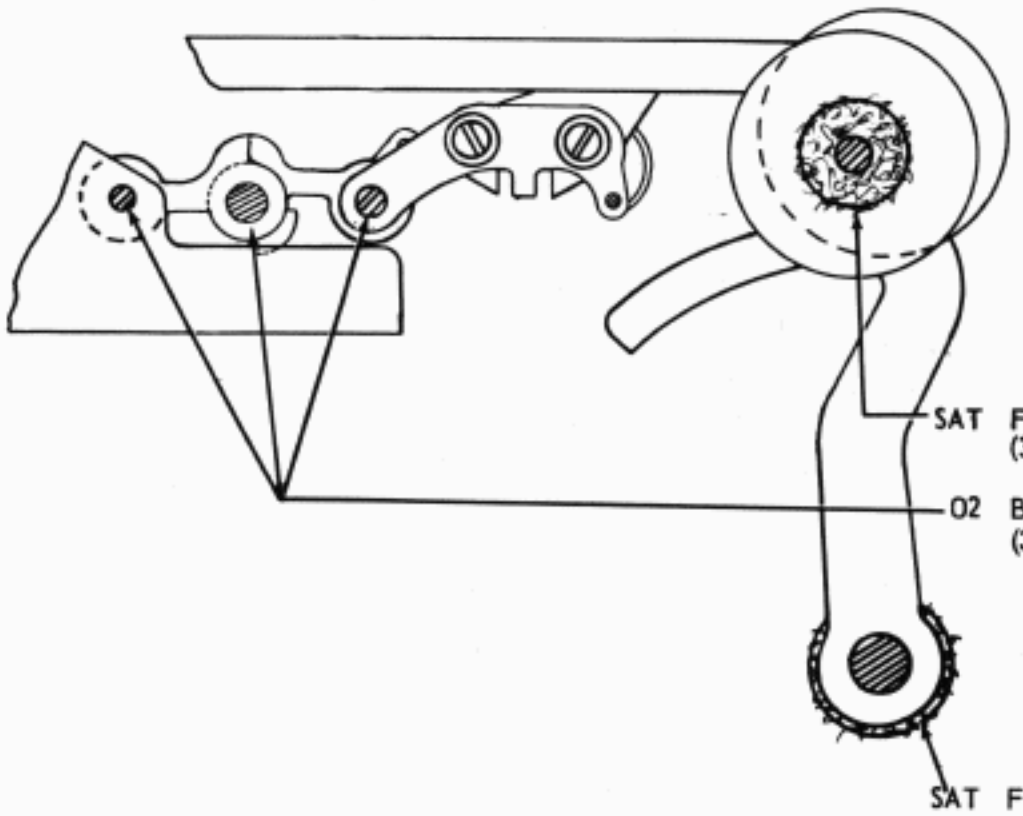

5.44 REST TYPING UNIT IN BOTTOM UPWARD POSITION

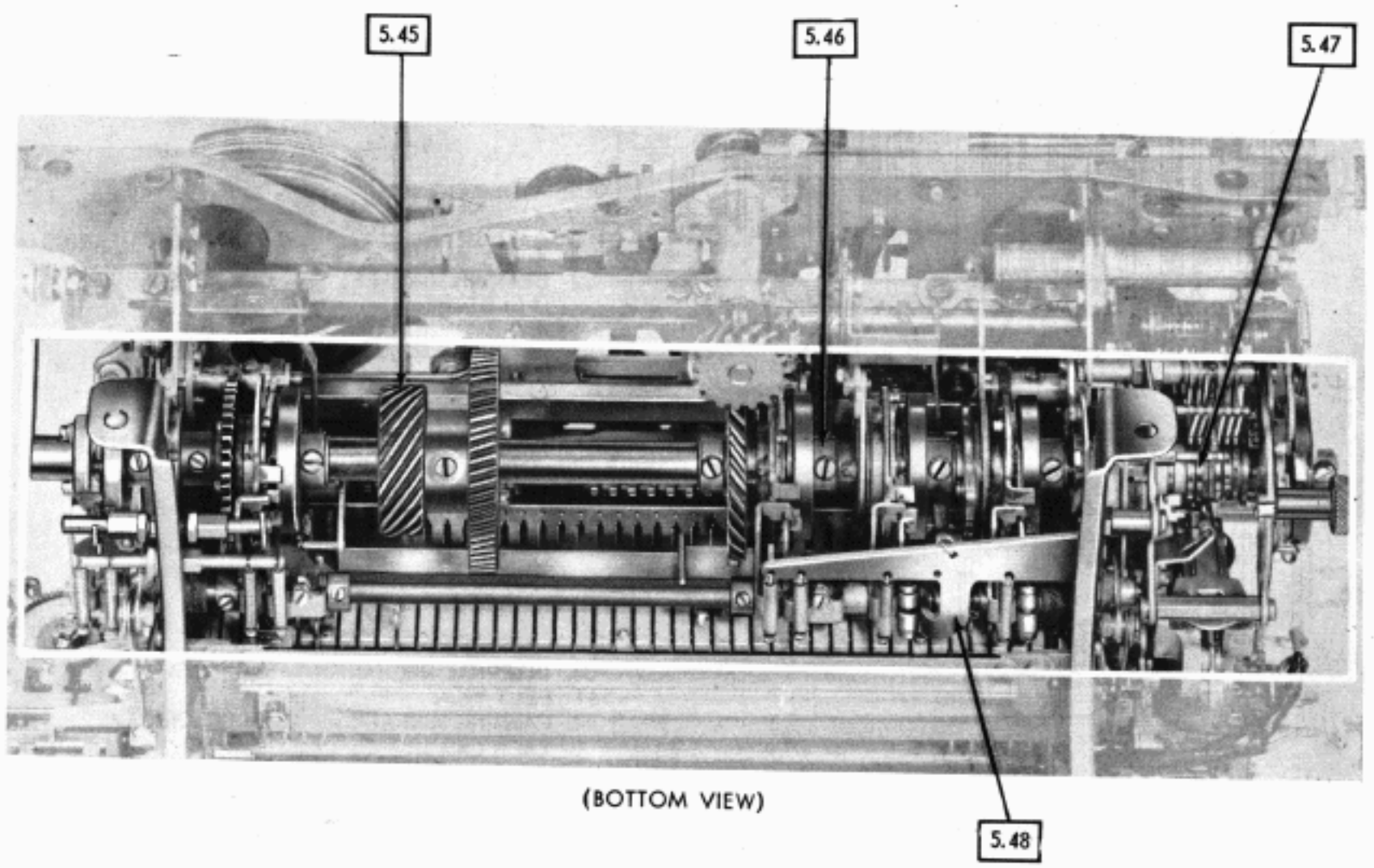

(BOTTOM VIEW)

5.45 MAIN SHAFT (CLUTCHES, GEARS, ETC.)

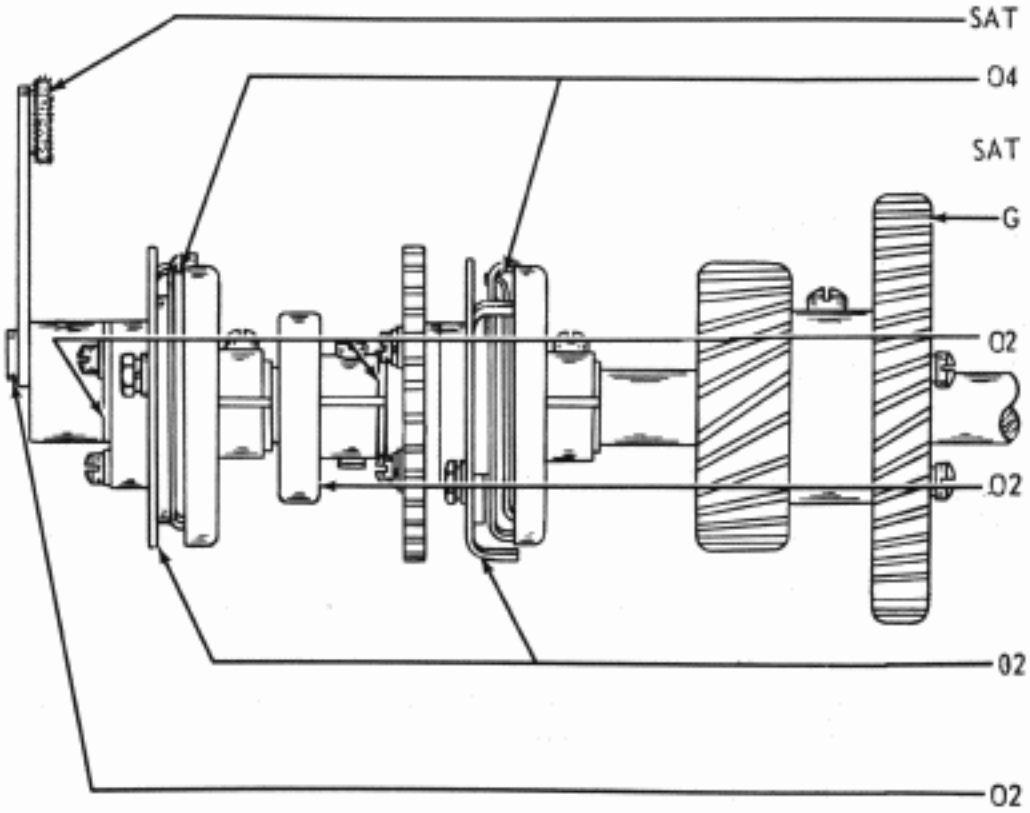

SAT	FELT WASHER	DRIVE LINK
04	INTERNAL MECHANISM (2 CLUTCHES)	CLUTCH ASSEMBLY
SAT	FELT WICKS	
G	TEETH (4 GEARS)	MAIN SHAFT GEARS
02	BEARING SURFACES (2 CLUTCHES)	CLUTCH SLEEVES
02	BALL BEARING	MAIN SHAFT BEARING
02	CAMMING SURFACES (2 DISKS)	CLUTCH DISKS
02	BEARING SURFACE	DRIVE LINK BEARING

5.46 MAIN SHAFT MECHANISM

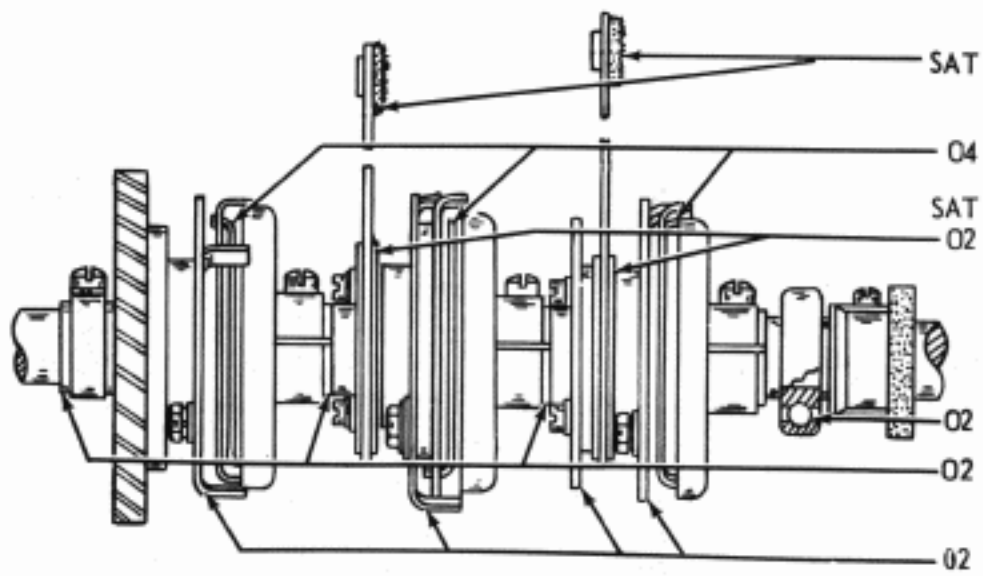

SAT	FELT WASHER (2 WASHERS)	ECCENTRIC FOLLOWER ARM BEARINGS
04	INTERNAL MECHANISM (3 CLUTCHES)	CLUTCH ASSEMBLY
SAT	FELT WICKS	
02	BEARING SURFACES (2 CAMS)	ECCENTRIC FOLLOWER ARM CAMS
02	BALL BEARING	MAIN SHAFT BEARING
02	BEARING SURFACES (3 CLUTCHES)	CLUTCH SLEEVE
02	CAMMING SURFACES (4 DISKS)	CLUTCH DISKS

5.47 SELECTOR CAM - CLUTCH ASSEMBLY

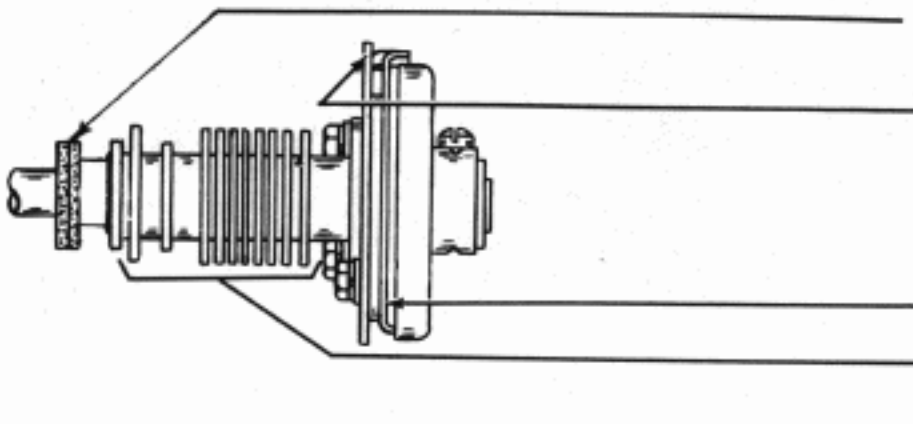

SAT	FELT WASHER (INNER END)	SELECTOR CAM SLEEVE
02	CAMMING SURFACES	CLUTCH DISK
04	INTERNAL MECHANISM	SELECTOR CLUTCH
SAT	FELT WICK	
02	CAMMING SURFACE – EACH CAM	SELECTOR CAM

5.48 MAIN SHAFT (CLUTCHES, GEARS, ETC.) - continued

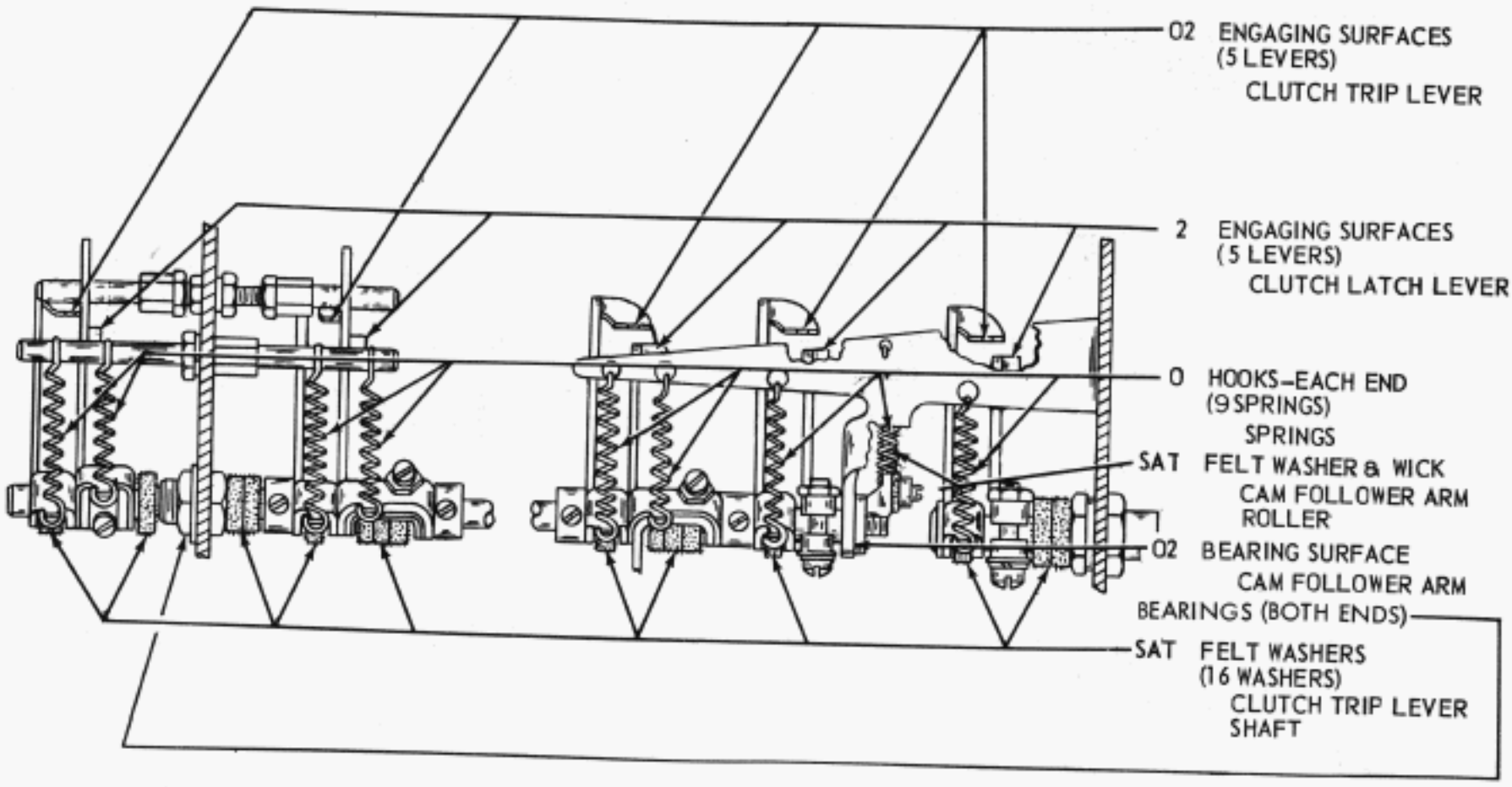

5.49 REST TYPING UNIT IN BOTTOM UPWARD POSITION

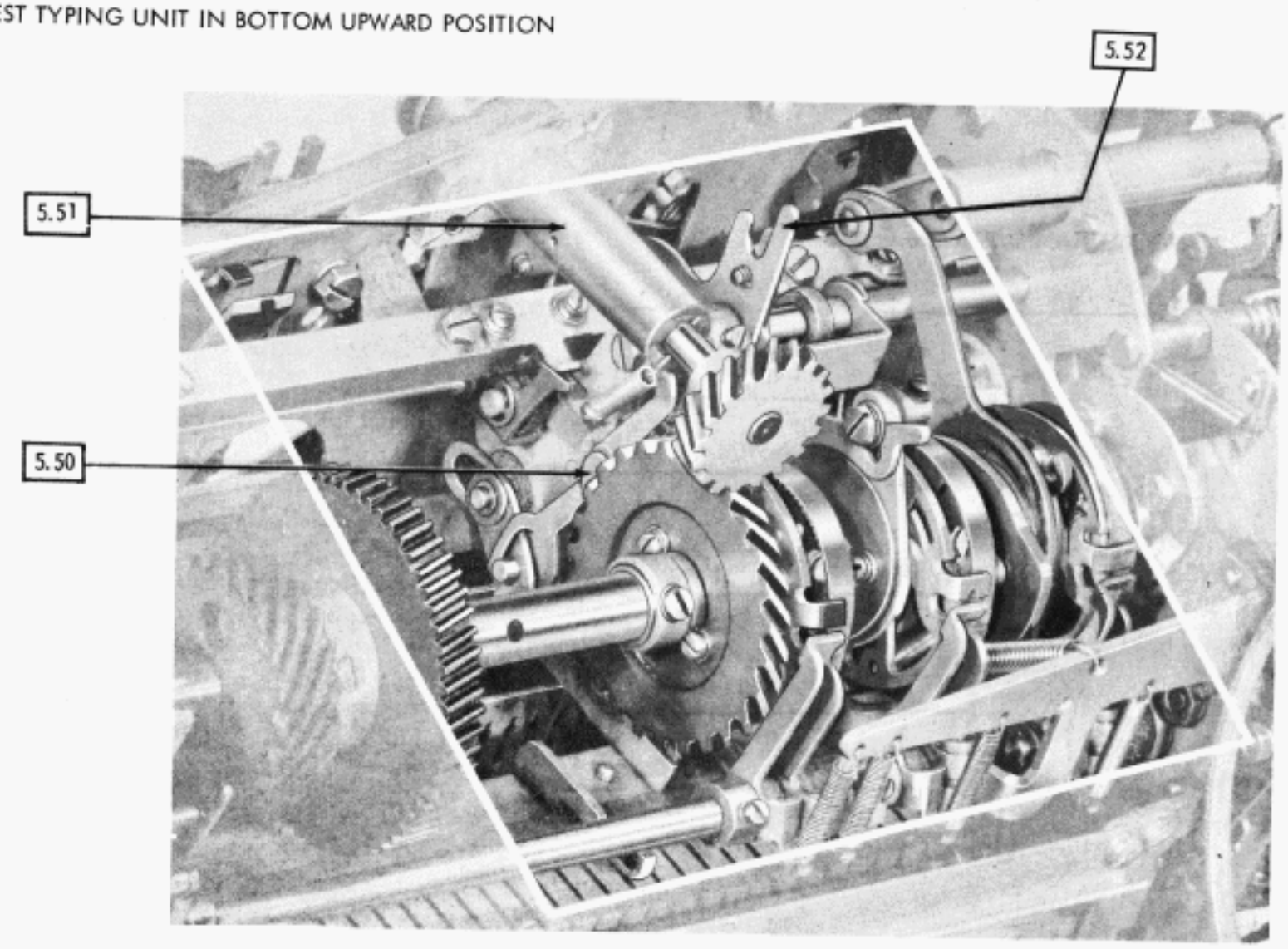

(BOTTOM VIEW)

5.50 SPACING MECHANISM

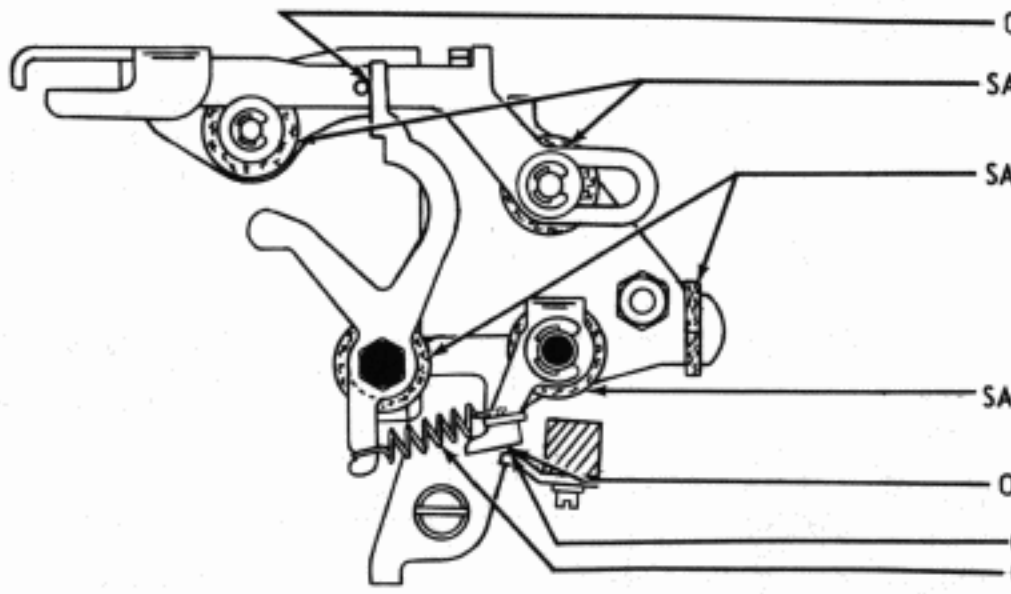

5.51 SPACING MECHANISM

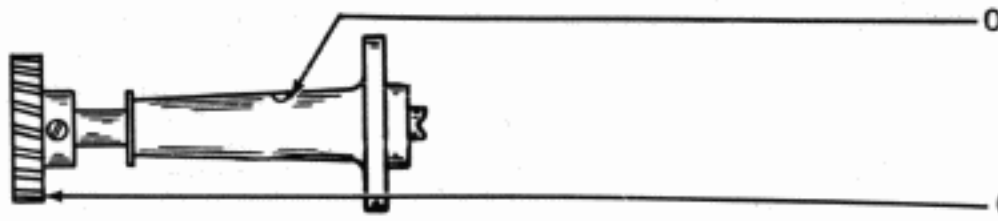

5.52 SPACING MECHANISM (Continued)

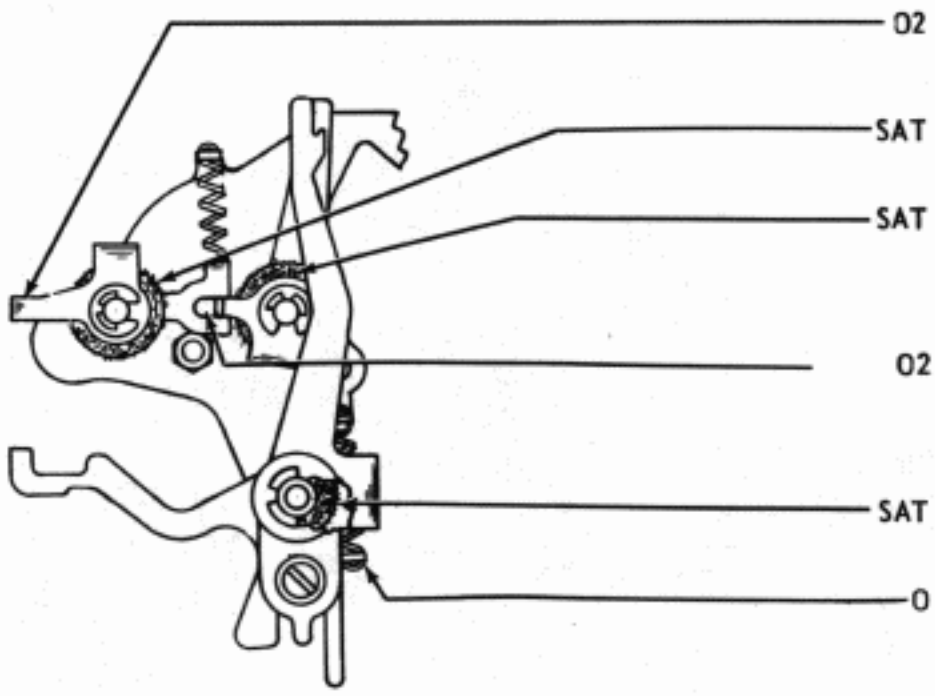

5.53 REST TYPING UNIT IN UPRIGHT POSITION

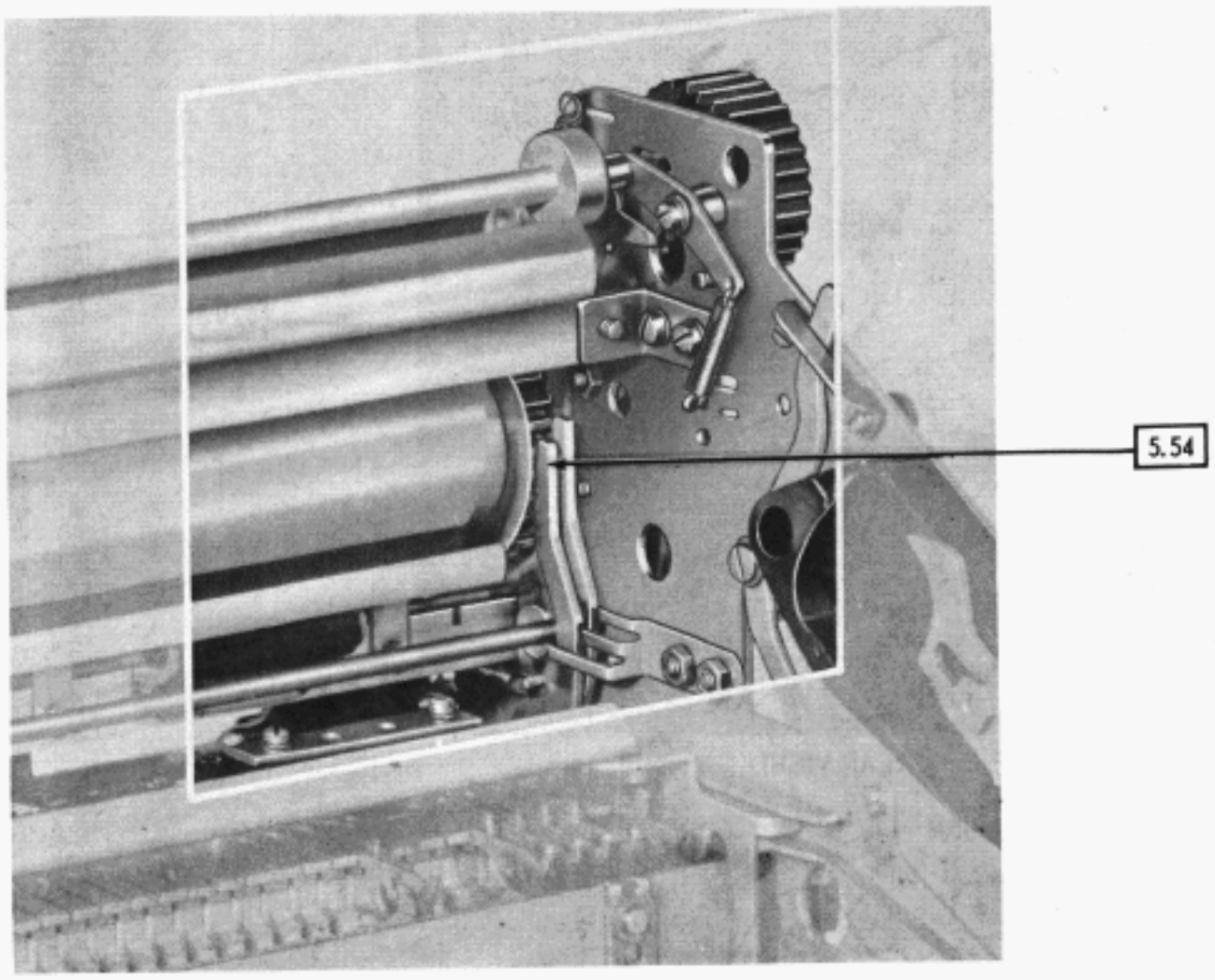

(REAR VIEW)

5.54 LINE FEED MECHANISM

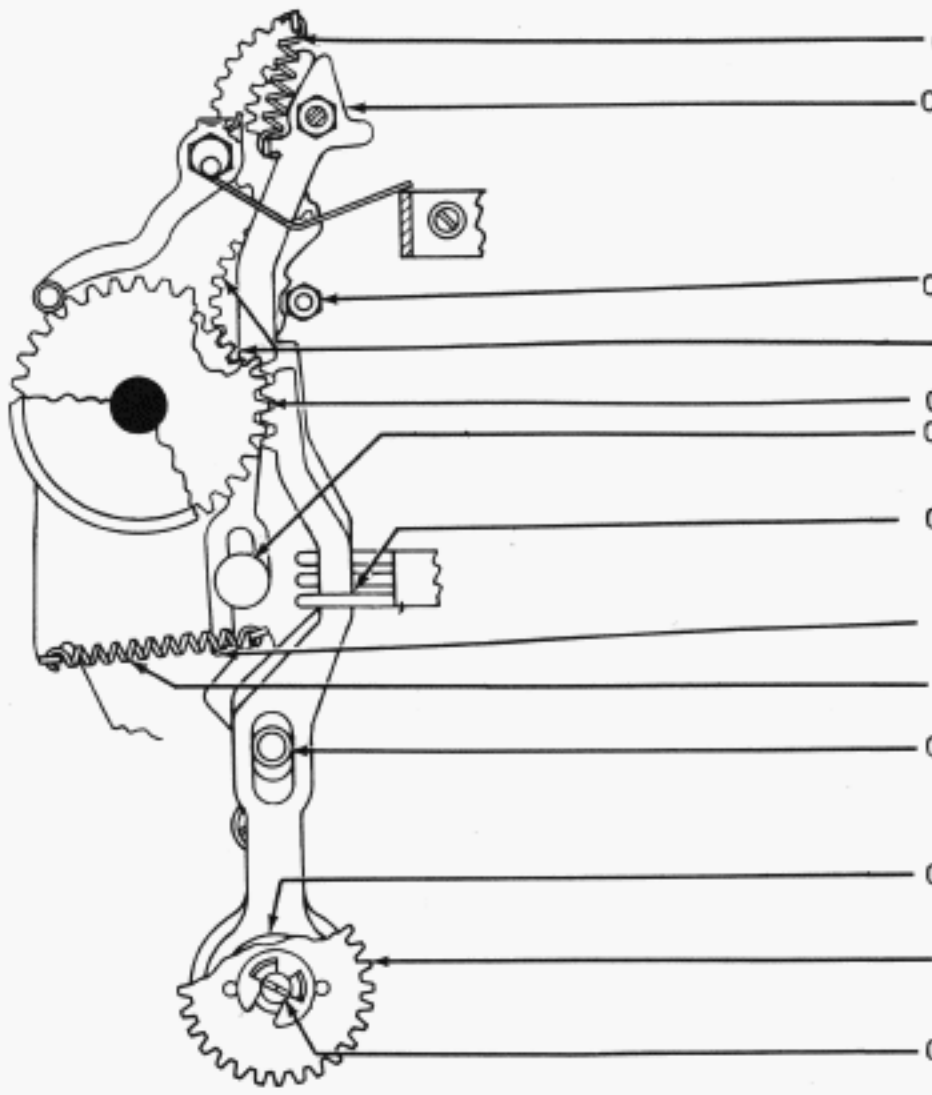

O	HOOKS–EACH END	SPRING
O2	BEARING SURFACE	PLATEN HAND WHEEL
O2	BEARING SURFACE	PLATEN IDLER SPUR GEAR
G	TEETH (2 GEARS)	PLATEN SPUR GEARS
O2	ENGAGING SURFACE	LINE FEED BARS
O2	GUIDING SURFACE	LINE FEED BAR RELEASE LEVER
O2	GUIDING SURFACES (2 BARS)	LINE FEED BARS
O2	ENGAGING SURFACE	LINE FEED BAR RELEASE LEVER
O	HOOKS–EACH END	SPRING
O2	GUIDING SURFACES (2 BARS)	LINE FEED BAR BELL CRANK
O2	BEARING SURFACES (2 BEARINGS)	LINE FEED BAR ECCENTRIC BEARING
G	TEETH	LINE FEED CLUTCH SPUR GEAR
O2	BEARING SURFACE	LINE FEED CLUTCH SPUR GEAR SHAFT

6. VARIABLE FEATURES

6.01 REST KEYBOARD IN UPRIGHT POSITION

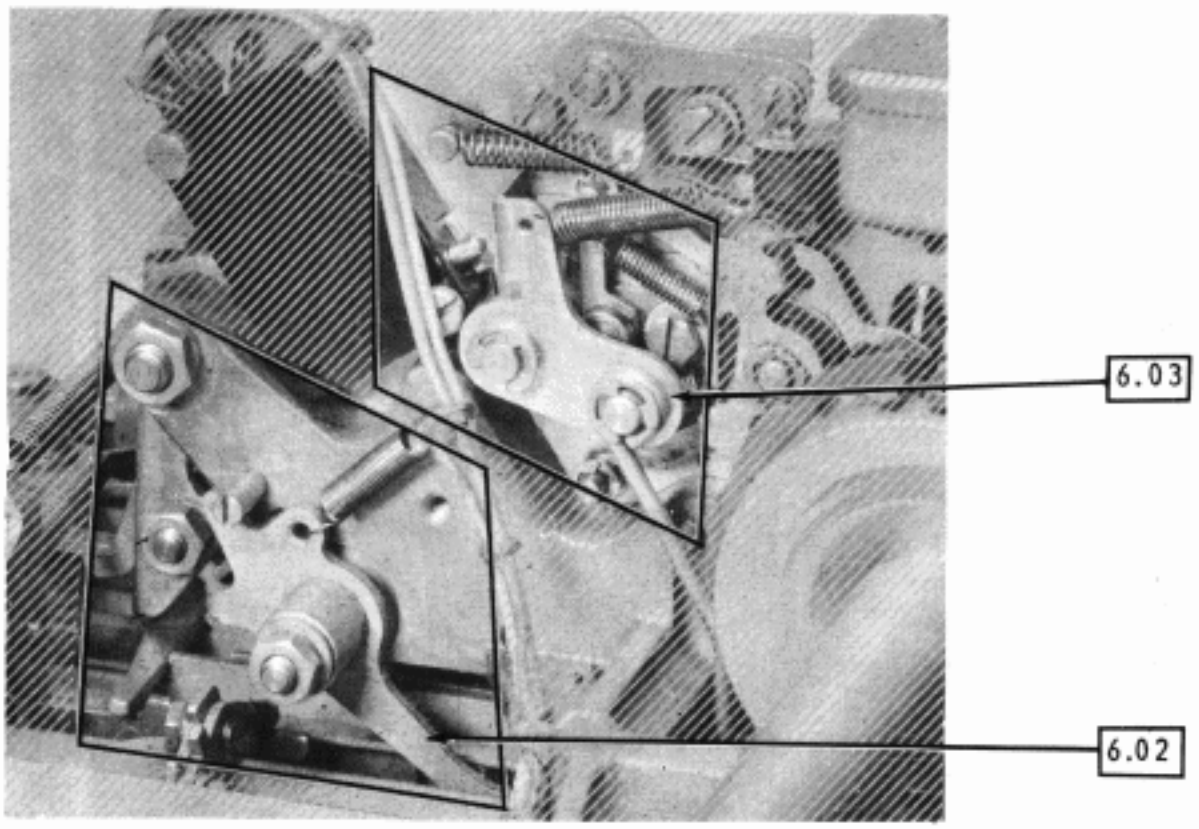

(REAR VIEW)

6.02 REPEAT ON SPACE MECHANISM

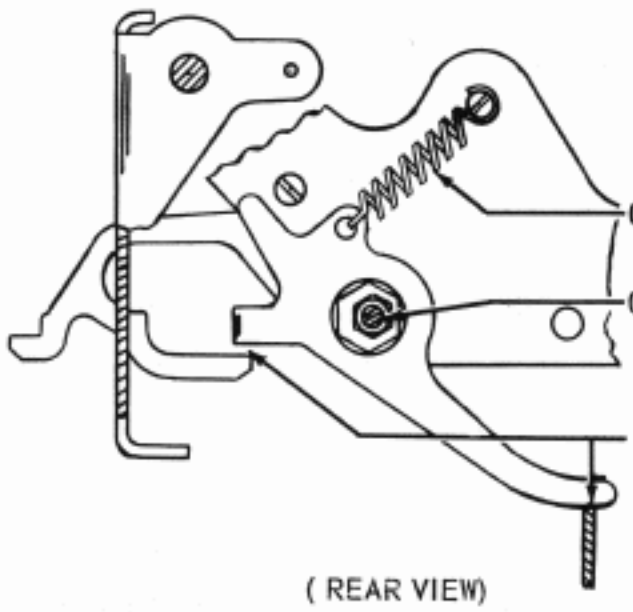

02 HOOKS – EACH END — SPRING

02 BEARING SURFACES (2 PLACES) — MOUNTING STUD

G CONTACT SURFACES (2 PLACES) — REPEAT TRIP LEVER

(REAR VIEW)

6.03 SIGNAL LINE BREAK MECHANISM (ELECTRICAL)

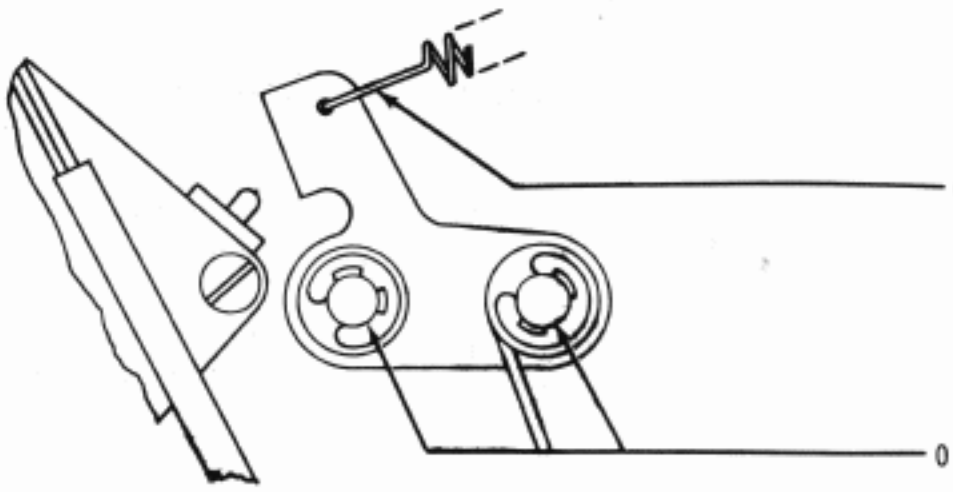

0 HOOKS – EACH END — SPRING

02 PIVOTS (2 PLACES) — BREAK LEVER

(REAR VIEW)

6.04 REST TYPING UNIT IN UPRIGHT POSITION.

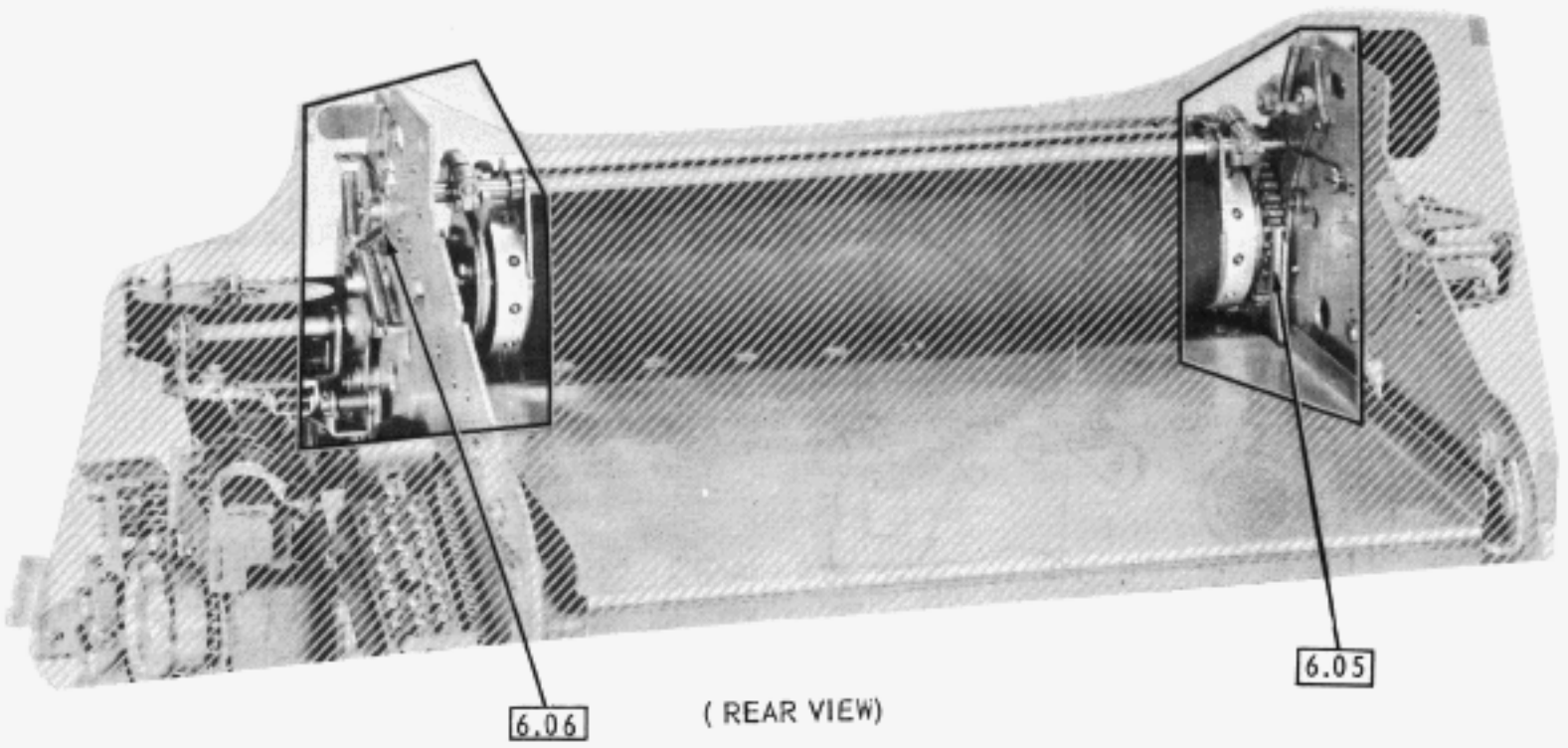

(REAR VIEW)

6.05 SPROCKET FEED–LINE FEED MECHANISM

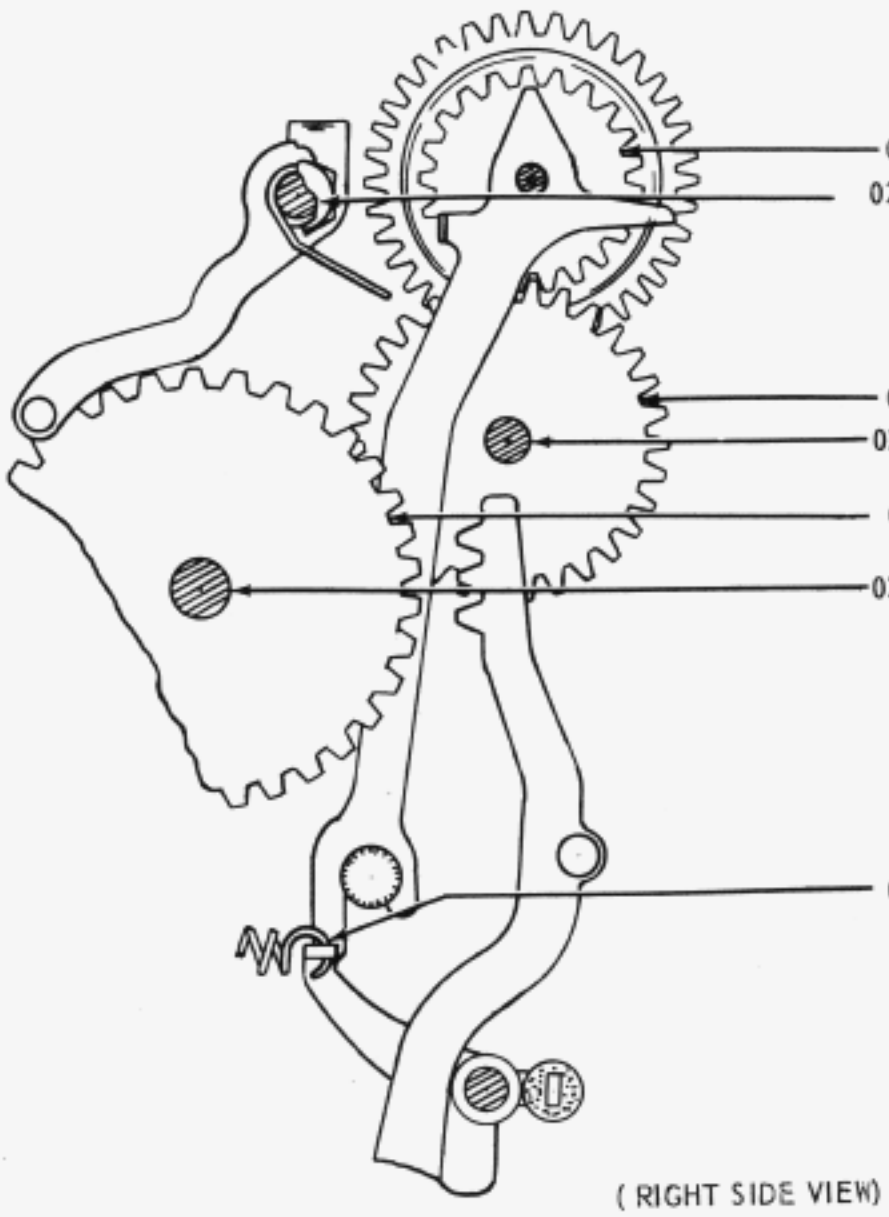

G	TEETH	HANDWHEEL GEAR
02	BEARING SURFACE	PLATEN DETENT BAIL
G	TEETH	IDLER GEAR
02	BEARING SURFACE	IDLER GEAR
G	TEETH	PLATEN GEAR
02	BEARING SURFACE (2 PLACES)	PLATEN GEAR
0	HOOKS – EACH END	SPRING

(RIGHT SIDE VIEW)

6.06 SPROCKET FEED–PAPER GUIDE MECHANISM

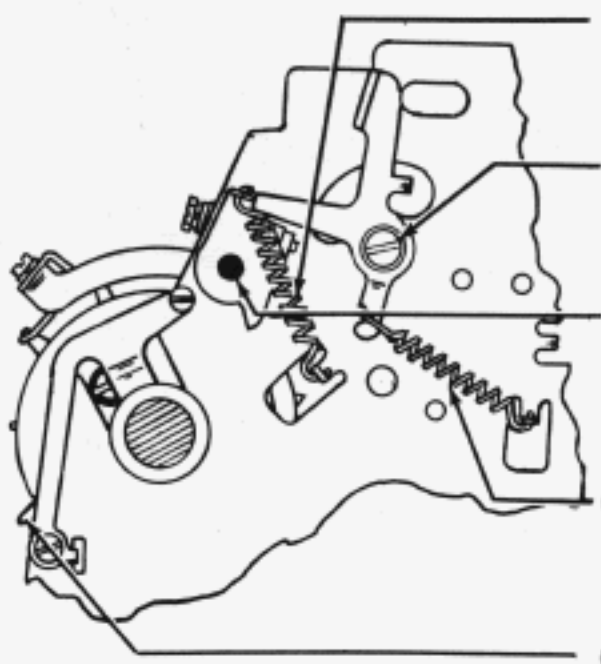

0	HOOKS – EACH END	SPRING
02	PIVOTS (2 PLACES)	GUIDE BRACKET LATCH
02	PIVOTS (2 PLACES)	GUIDE BRACKET SHAFT
0	HOOKS – EACH END	SPRING
G	PACK PIN AND SPRING CAVATIES (22 PLACES)	SPROCKET

(RIGHT SIDE VIEW)

NOTE: BEFORE ATTEMPTING TO DISASSEMBLY THE 153700 PLATEN HUB, SEE DISASSEMBLY AND REASSEMBLY INSTRUCTIONS, PAGE 1-93.

6.07 REST TYPING UNIT IN UPRIGHT POSITION.

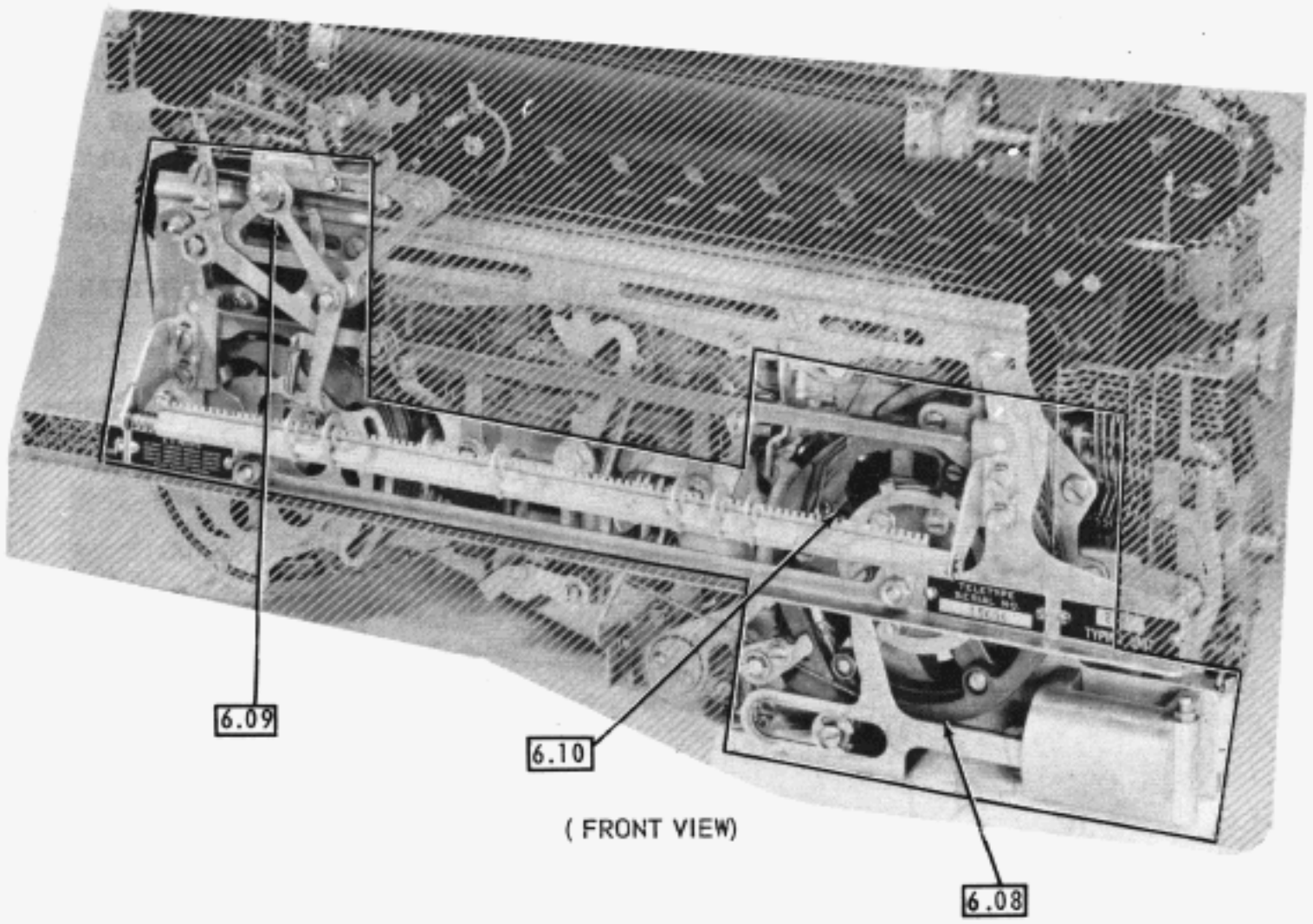

(FRONT VIEW)

6.08 UNIVERSAL DRUM MECHANISM (NEW DESIGN)

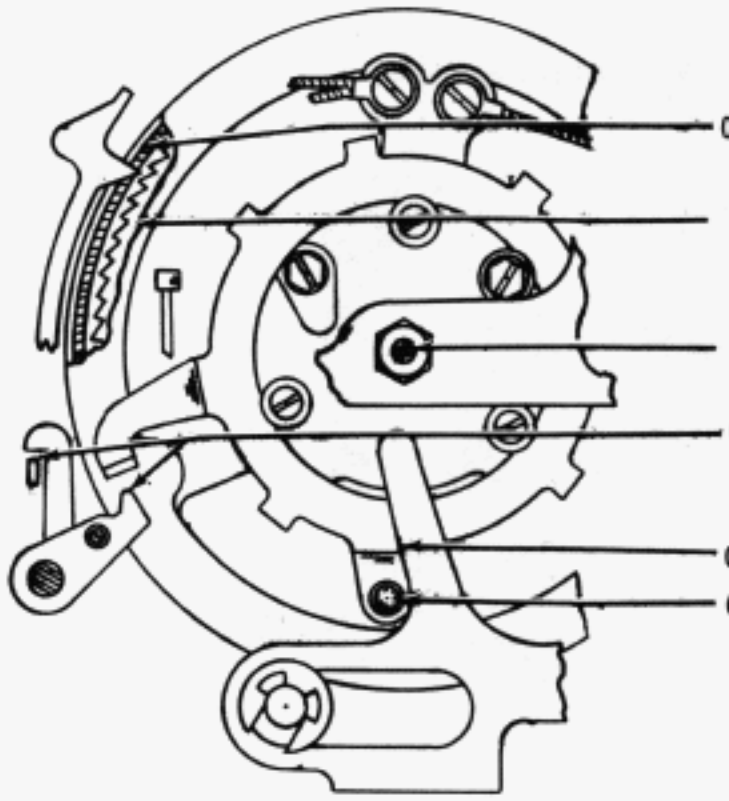

(FRONT VIEW)

6.09 HORIZONTAL TABULATOR – TABULATOR SHAFT MECHANISM (EARLIER DESIGN)

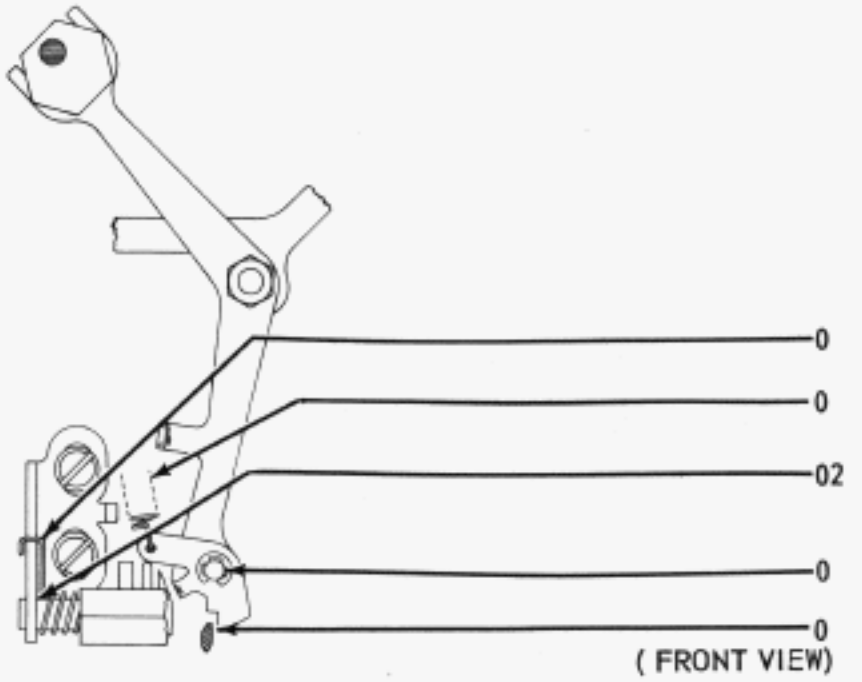

(FRONT VIEW)

6.10 HORIZONTAL TABULATOR – SPACE SUPPRESSION MECHANISM

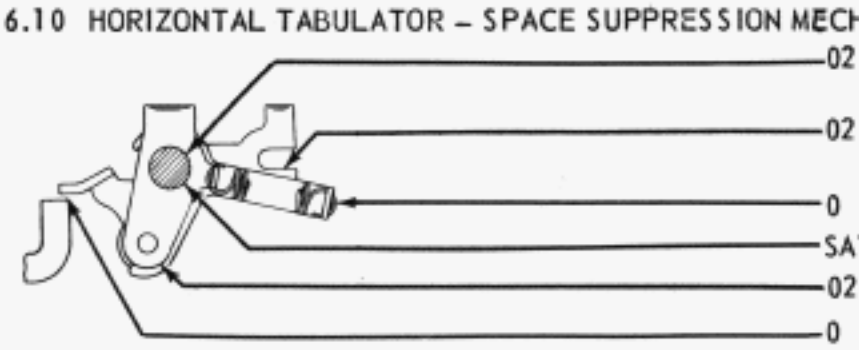

(RIGHT SIDE VIEW)

6.11 REST TYPING UNIT BOTTOM SIDE UP.

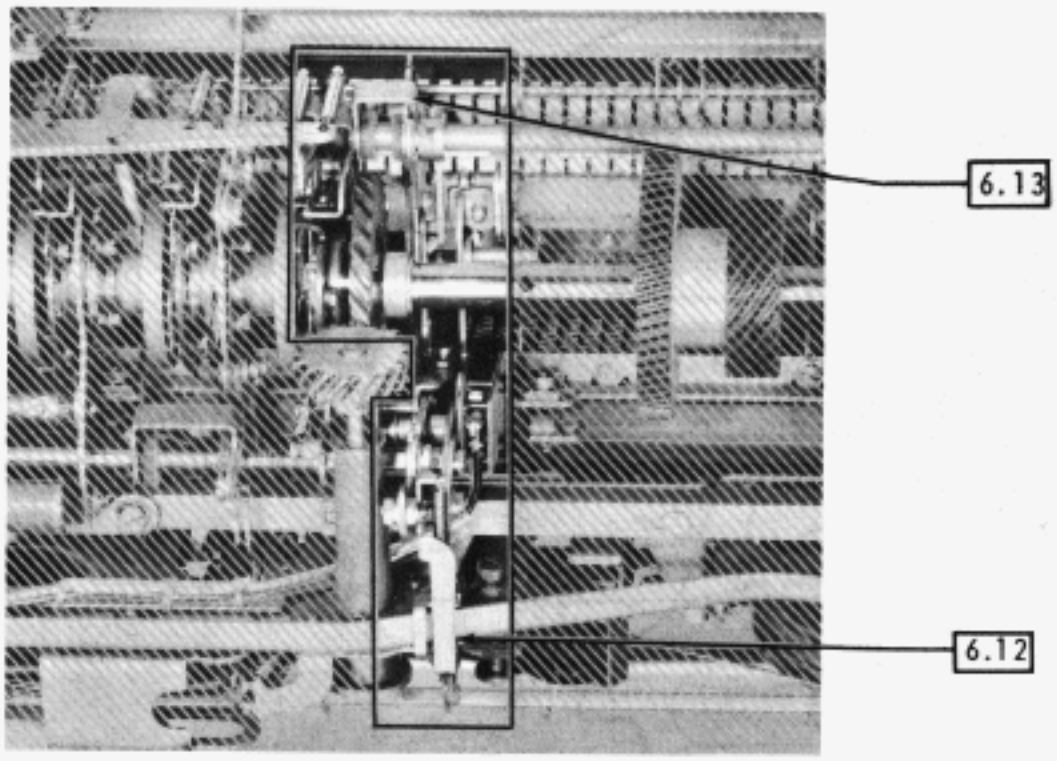

(BOTTOM VIEW)

6.12 HORIZONTAL TABULATOR – OPERATING LEVER MECHANISM (EARLIER DESIGN)

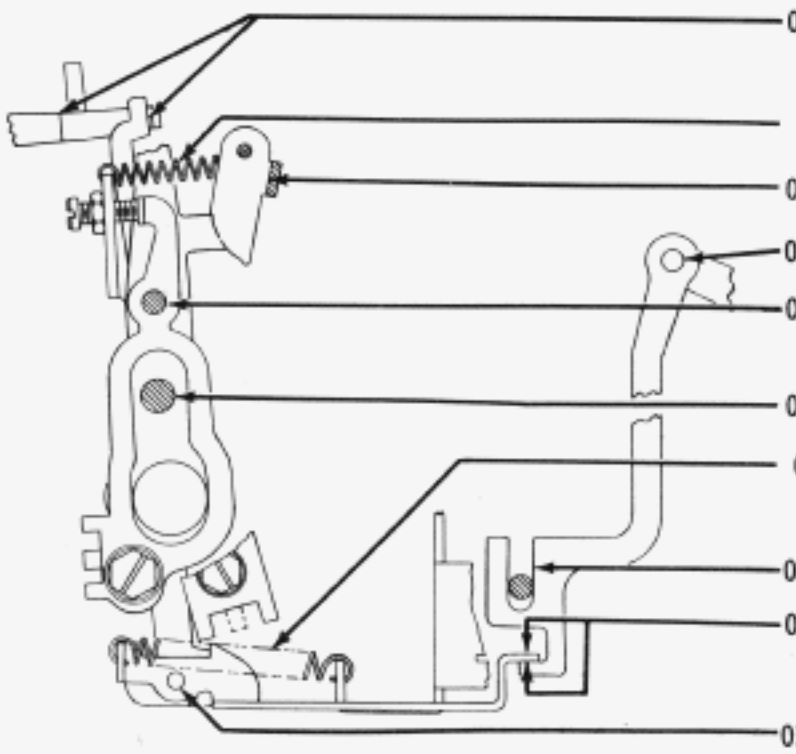

02	ENGAGING SURFACES (2 PLACES)	SPACING TRIP ARM
0	HOOKS – EACH END	SPRING
02	ENGAGING SURFACE	OPERATING LEVER
02	BEARING SURFACE	BLOCKING ARM
02	BEARING SURFACES (2 PLACES)	TRIP ARM LATCH BAIL
02	BEARING SURFACE	OPERATING LEVER
0	HOOKS – EACH END	SPRING
02	GUIDE SURFACE	BLOCKING ARM
02	ENGAGING SURFACES (2 PLACES)	SLIDE ARM
02	BEARING SURFACE	SLIDE ARM

(LEFT SIDE VIEW)

6.13 HORIZONTAL TABULATOR – SPACING CLUTCH MECHANISM (EARLIER DESIGN)

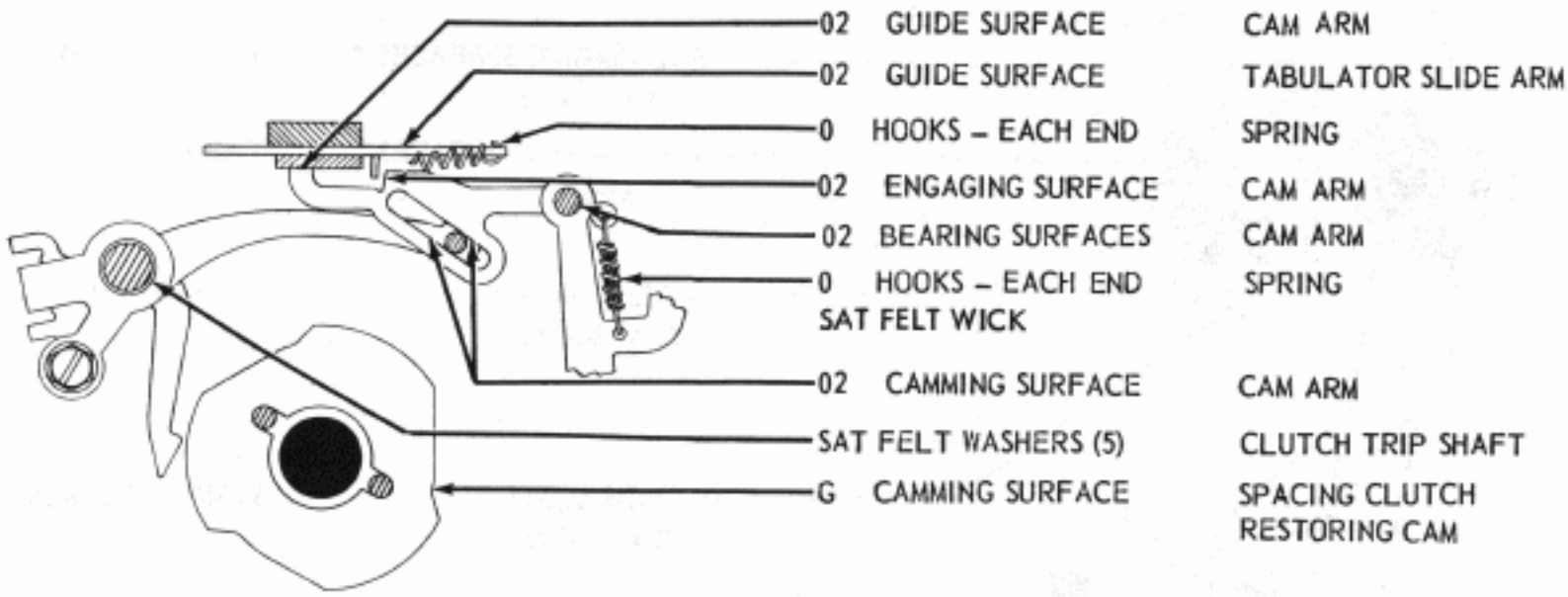

6.14 REST TYPING UNIT IN UPRIGHT POSITION

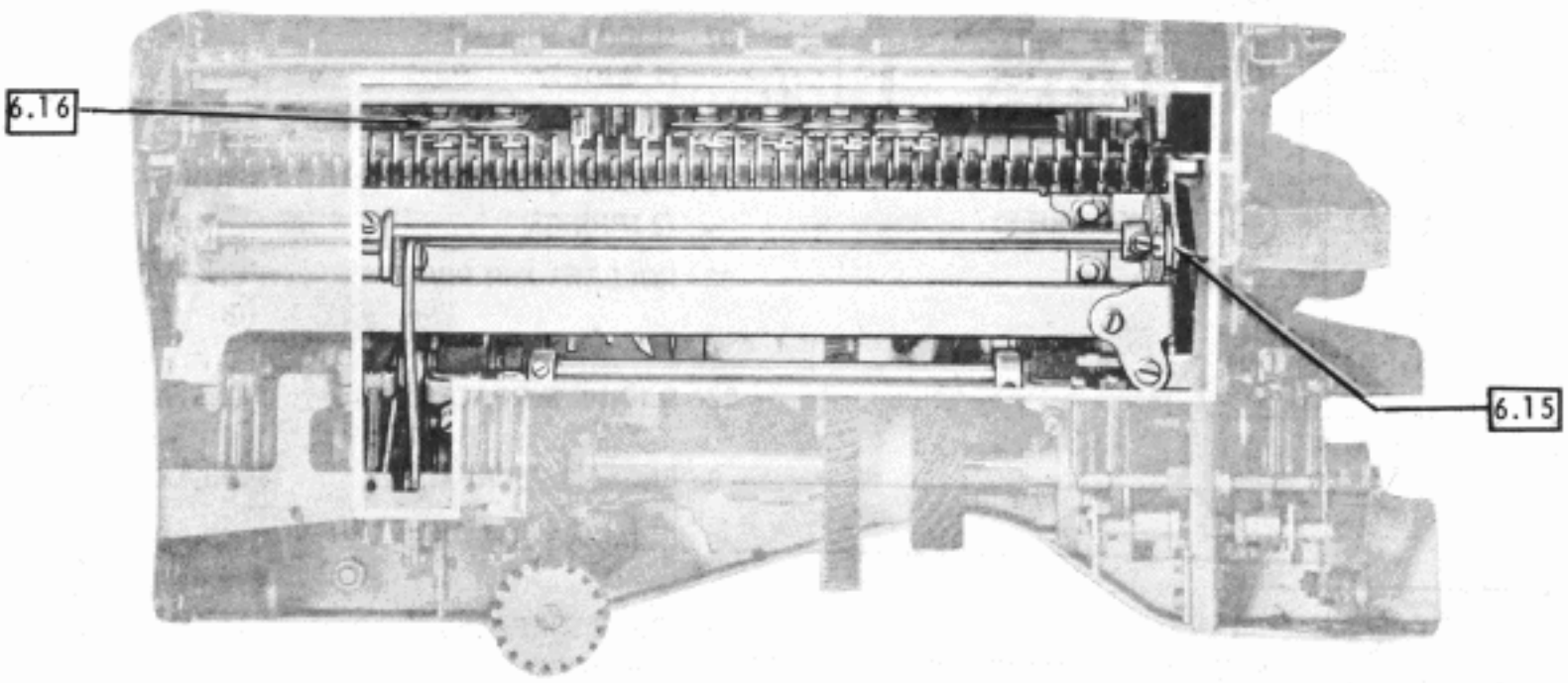

(REAR VIEW)

6.15 SELECTIVE CALLING – STRIPPER BAIL MECHANISM

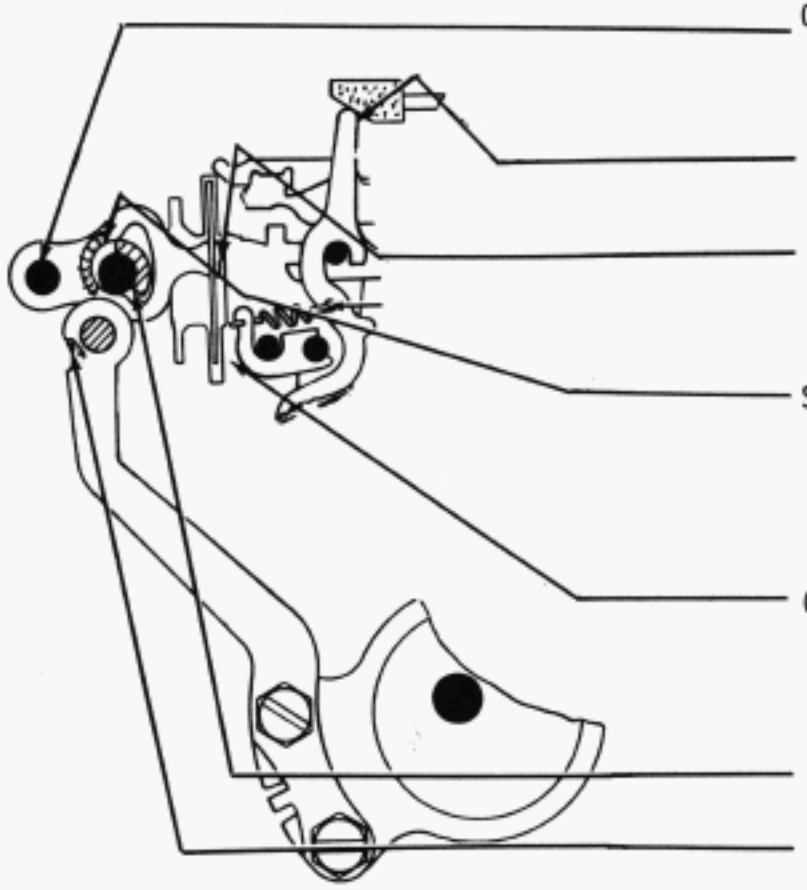

02	BEARING SURFACES (2 BEARINGS)	CAM ARMS
G	ENGAGING SURFACES * (EACH ARM)	CONTACT ARM
G	ENGAGING SURFACES (2 ARMS)	CAM ARMS
	SAT FELT WASHERS (4 WASHERS)	DRIVING CAM
02	GUIDE SLOTS (EACH END)	STRIPPER BLADE
G	CAMMING SURFACES (2 CAMS)	DRIVING CAM
	SAT FELT WASHER	STRIPPER BLADE DRIVING ARM

(LEFT SIDE VIEW)

* APPLY LIGHT FILM OF GREASE AND WIPE OFF SURPLUS WITH CLOTH. LUBRICATION IS REQUIRED ON INITIAL BREAK-IN ONLY.

6.16 SELECTIVE CALLING – SHIFT AND STRIPPER BAIL MECHANISMS

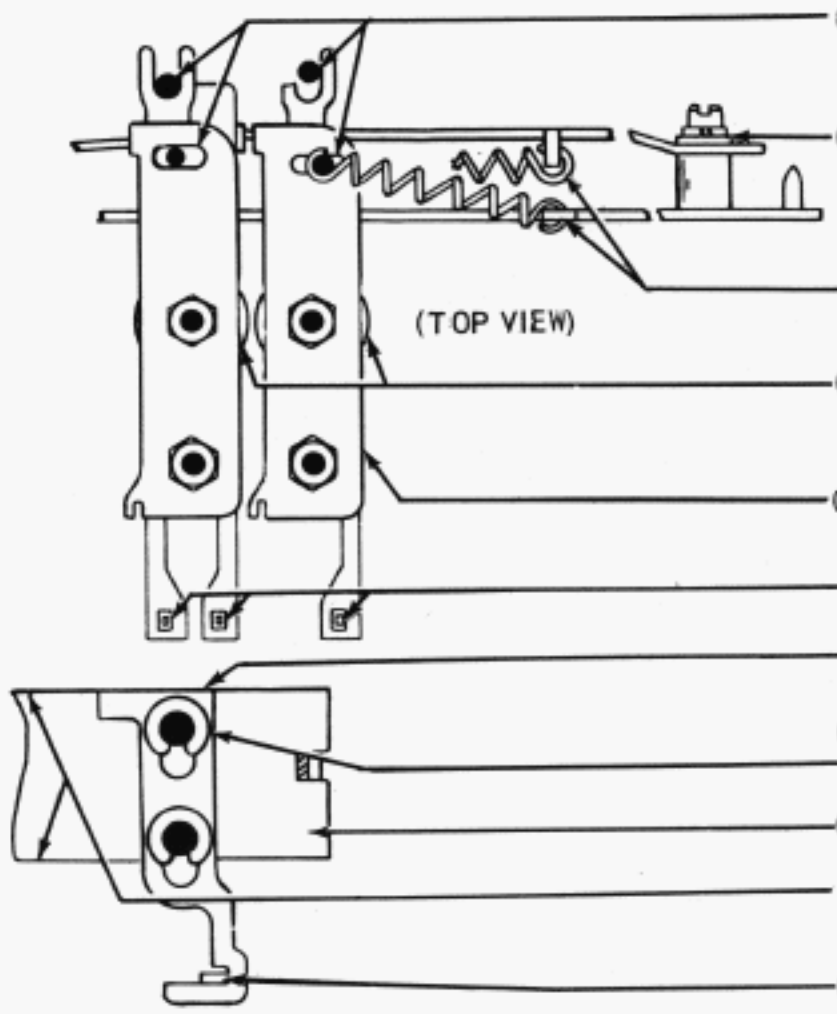

02	ENGAGING SURFACES	CODE BAR FORKS
02	SLIDING SURFACES (2 SLIDES)	BLOCKING SLIDE
0	HOOKS–EACH END (2 SPRINGS)	SPRINGS
02	ROLLERS AND PIVOTS	FUNCTION SLIDES
02	SLIDING SURFACES	FUNCTION SLIDES
0	ENGAGING SURFACES	FUNCTION SLIDES
0	ENGAGING SURFACE	LINE FEED STRIPPER SLIDE
02	GUIDE SURFACES (2 PLACES)	STRIPPER SLIDE
02	GUIDE SURFACES (EACH END)	STRIPPER BLADE
G	ENGAGING SURFACES (2 PLACES)	STRIPPER BLADE
02	ENGAGING SURFACE	STRIPPER BAIL

(TOP VIEW)

(REAR VIEW)

6.17 REST TYPING UNIT IN UPRIGHT POSITION.
REMOVE STUNT BOX (SEE PAGE 1-90)

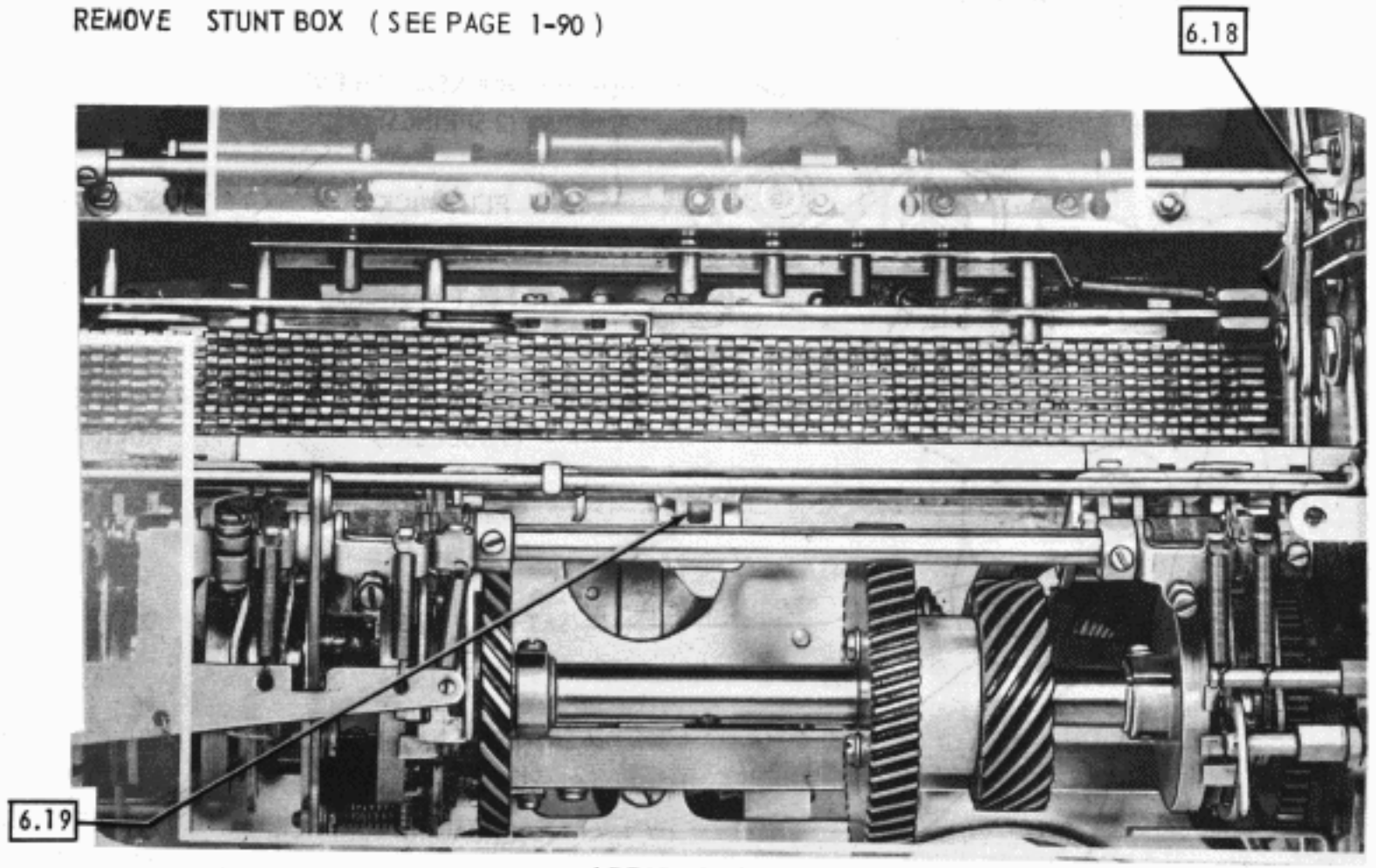

(REAR VIEW)

6.18 SELECTIVE CALLING – SINGLE – DOUBLE LINE FEED MECHANISM

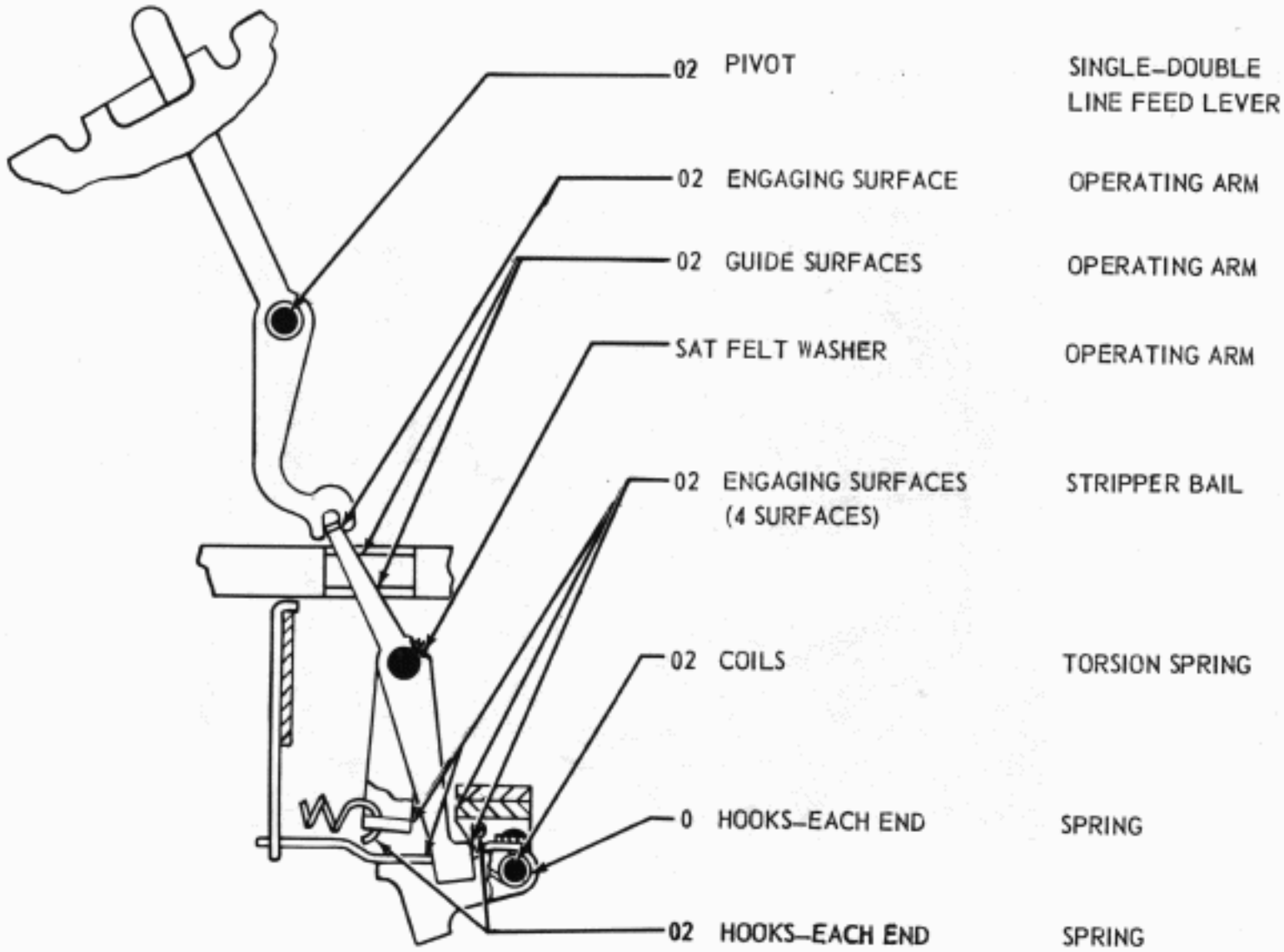

(RIGHT SIDE VIEW)

6.19 SELECTIVE CALLING – FUNCTION RESET BAIL MECHANISM

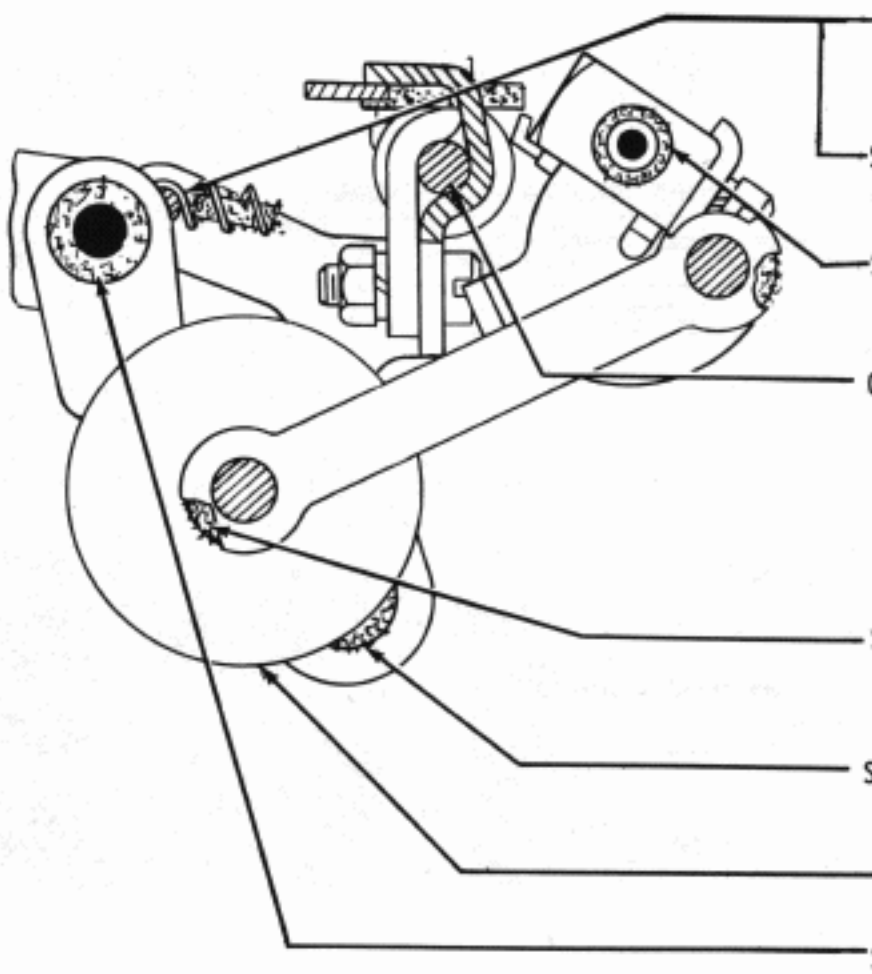

(LEFT SIDE VIEW)

6.20 REST TYPING UNIT IN UPRIGHT POSITION.

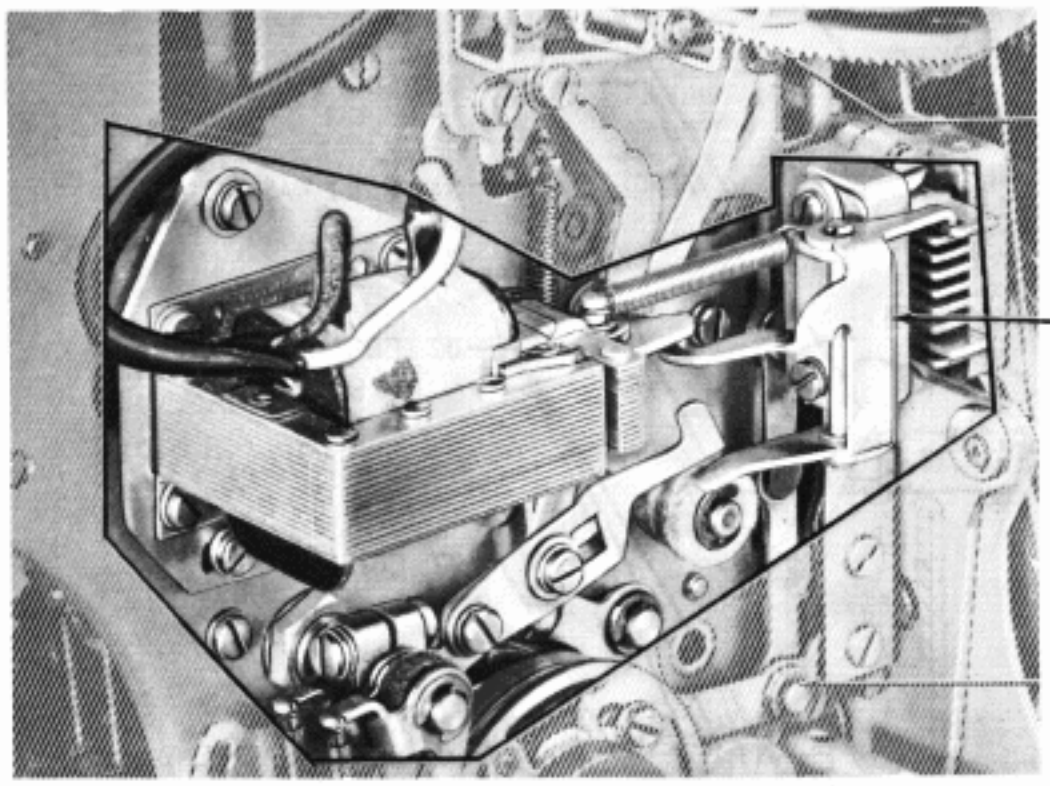

(LEFT SIDE VIEW)

6.21 SELECTIVE CALLING – CLUTCH SUPPRESSION MECHANISM

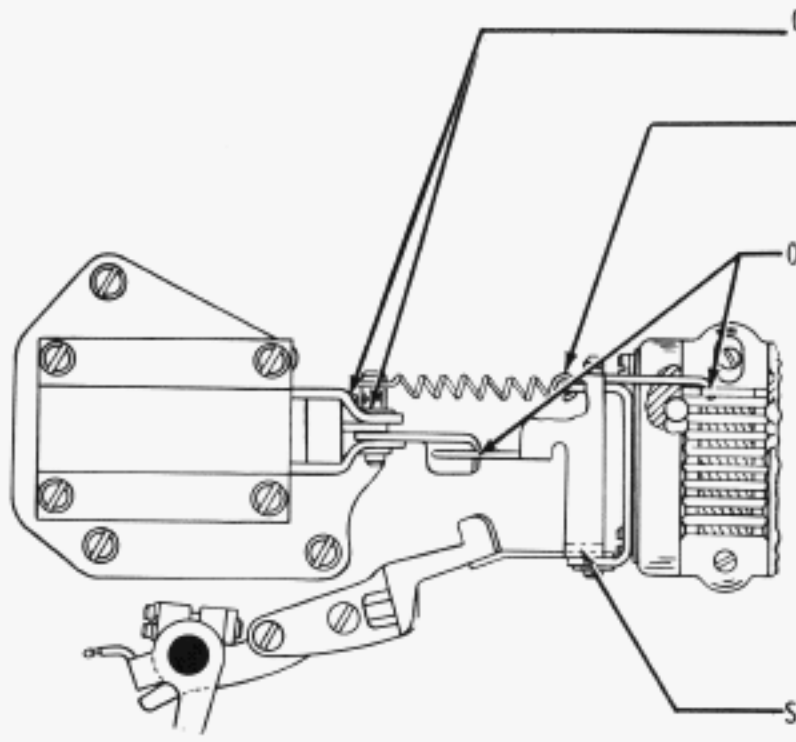

(LEFT SIDE VIEW)

6.22 REST KEYBOARD IN UPRIGHT POSITION

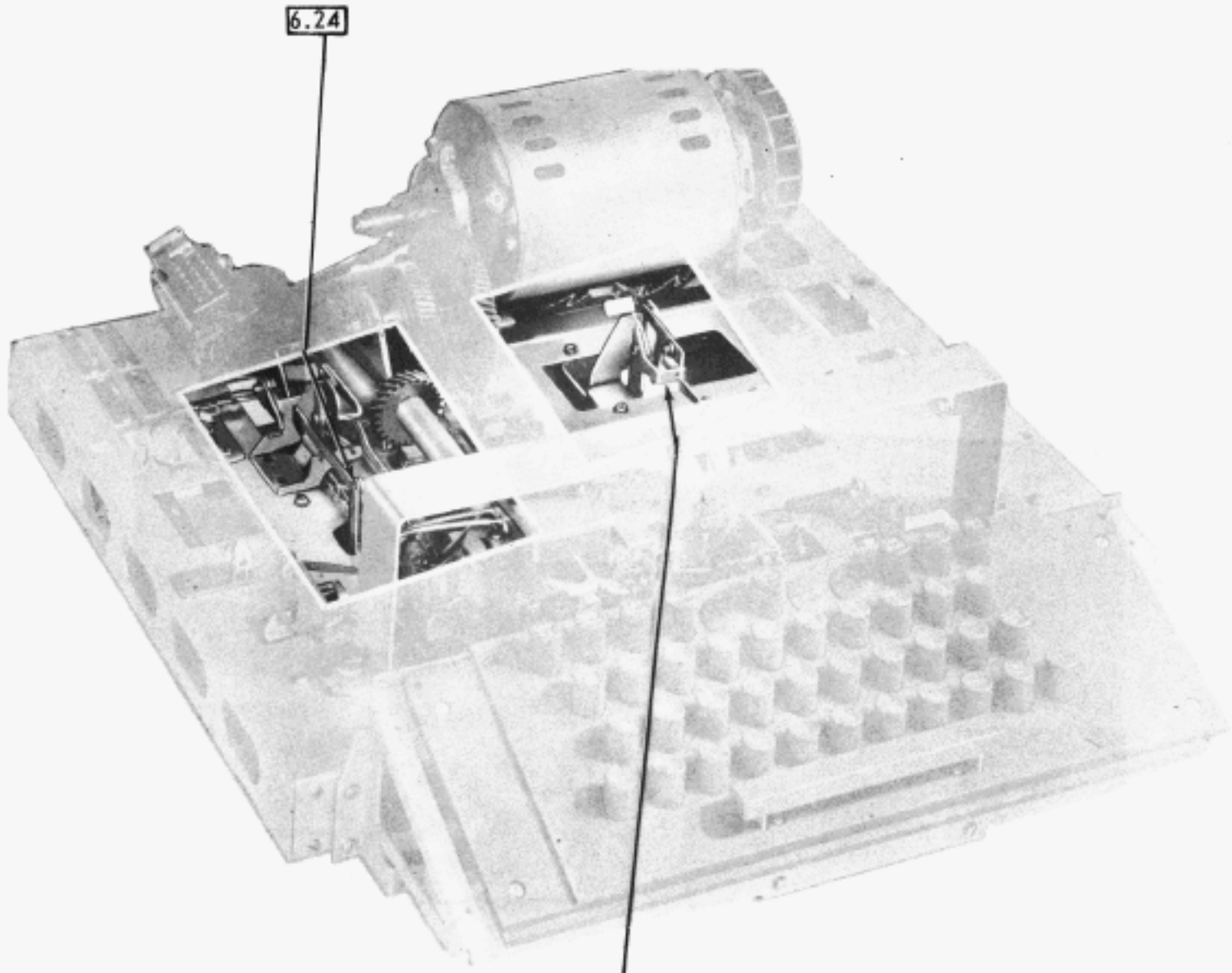

(TOP VIEW)

6.23 LOCAL BACK SPACE MECHANISM

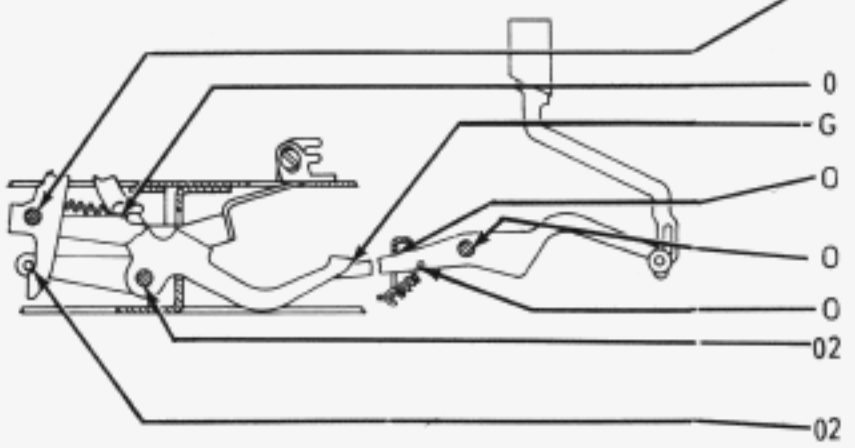

02	BEARING SURFACE	LOCAL BACK SPACE TRANSFER BAIL
0	HOOKS–EACH END	SPRING
G	ENGAGING SURFACE	FUNCTION LEVER
0	GUIDE SLOTS (2 PLACES)	GUIDE BRACKET
0	BEARING SURFACE	FUNCTION LEVER
0	HOOKS–EACH END	SPRING
02	BEARING SURFACES (2 PLACES)	OPERATING BAIL
02	ENGAGING SURFACE	OPERATING BAIL

(LEFT SIDE VIEW)

6.24 LOCAL REVERSE LINE FEED MECHANISM

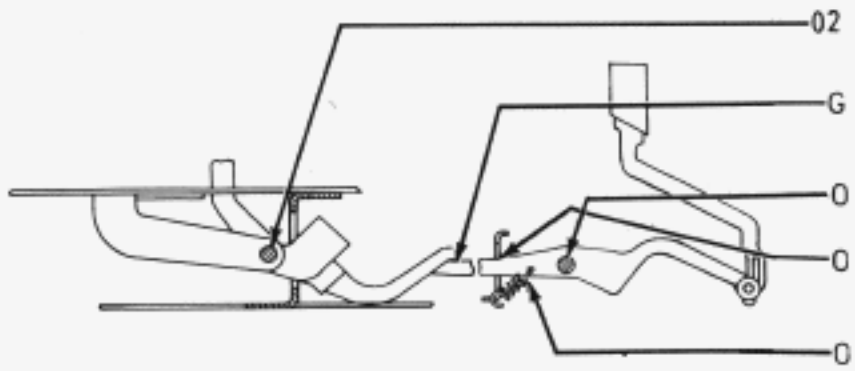

02	BEARING SURFACE	LOCAL REVERSE LINE FEED OPERATING BAIL
G	ENGAGING SURFACE	FUNCTION LEVER
0	BEARING SURFACE	FUNCTION LEVER
0	GUIDE SLOTS (2 SLOTS)	FUNCTION LEVER
0	HOOKS–EACH END	SPRING

(LEFT SIDE VIEW)

6.25 REST TYPING UNIT IN UPRIGHT POSITION

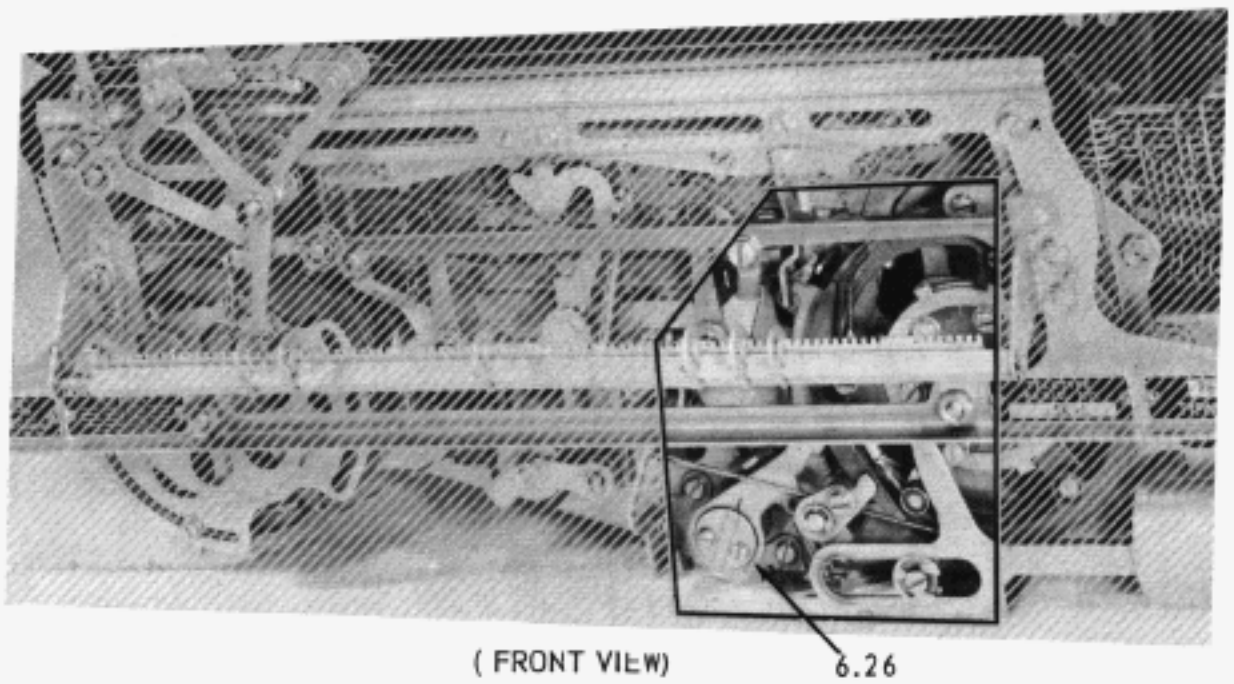

(FRONT VIEW) 6.26

6.26 LOCAL BACK SPACE MECHANISM

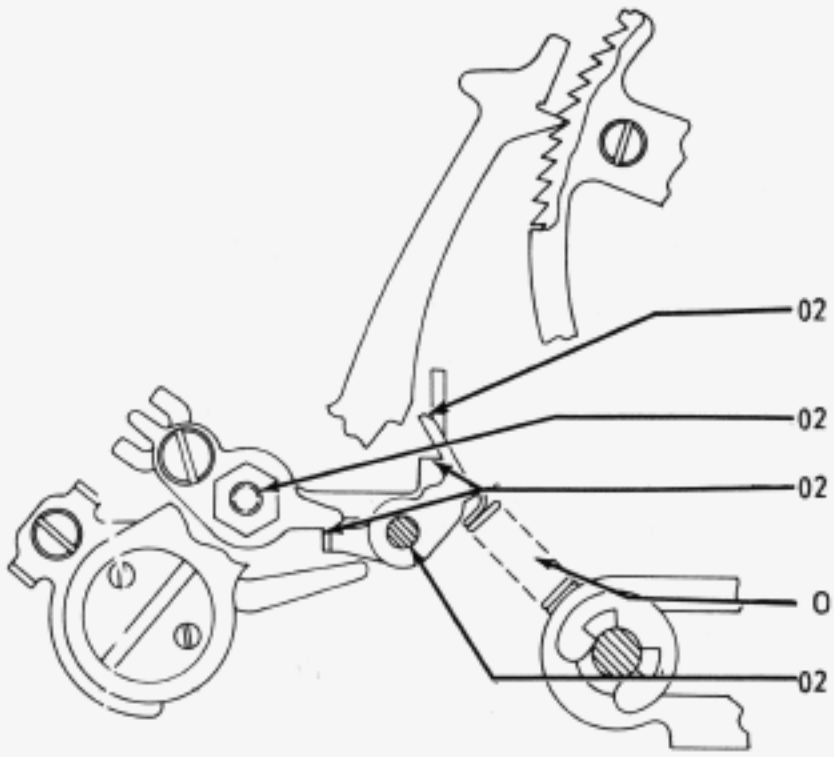

(FRONT VIEW)

6.27 REST TYPING UNIT BOTTOM SIDE UP

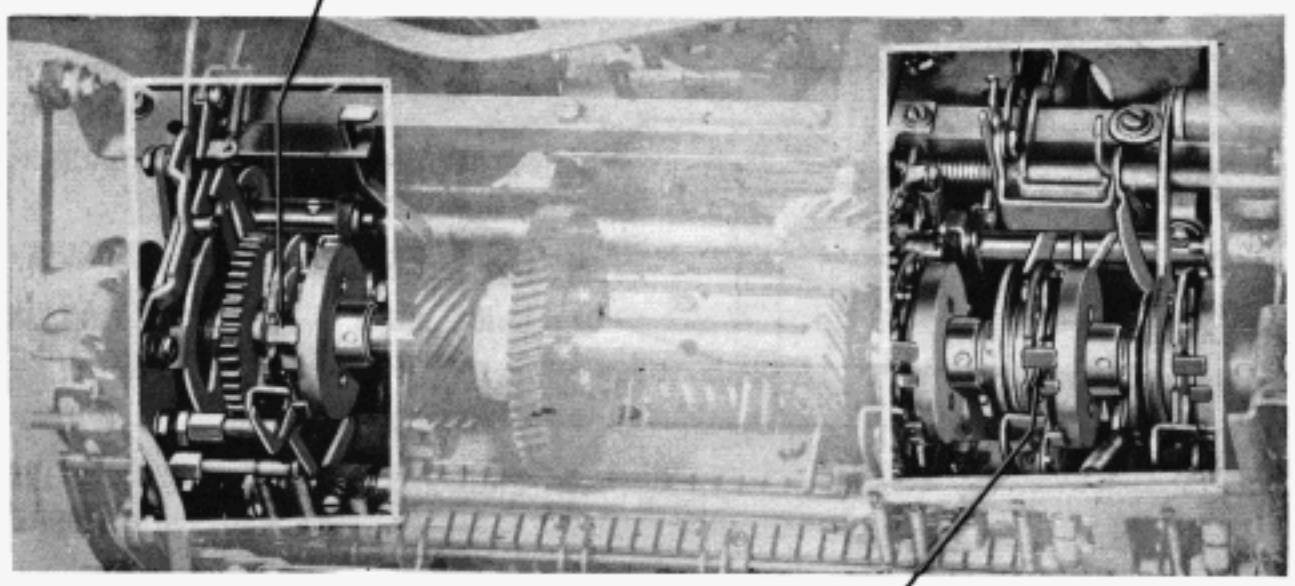

(BOTTOM VIEW)

6.28 LOCAL REVERSE LINE FEED MECHANISM

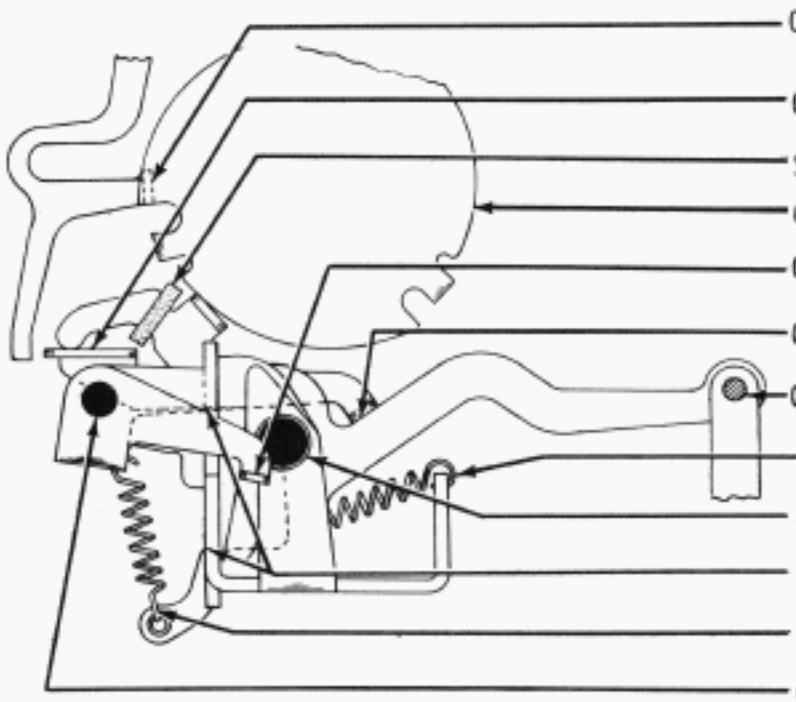

02	ENGAGING SURFACE	LINE FEED CLUTCH TRIP LEVER
02	ENGAGING SURFACE	TRIP LINK
SAT	FELT OILER	STRIPPER LEVER
G	CAMMING SURFACE	CAM DISK
02	ENGAGING SURFACE	TRANSFER BAIL
02	BEARING SURFACE	TRIP LINK
02	BEARING SURFACE	TRIP LINK
0	HOOKS–EACH END	SPRING
02	BEARING SURFACE	STRIPPER LEVER
02	GUIDE SLOTS	TRIP LINK
0	HOOKS – EACH END	SPRING
02	BEARING SURFACE	TRANSFER BAIL

(LEFT SIDE VIEW)

6.29 LOCAL BACK SPACE MECHANISM

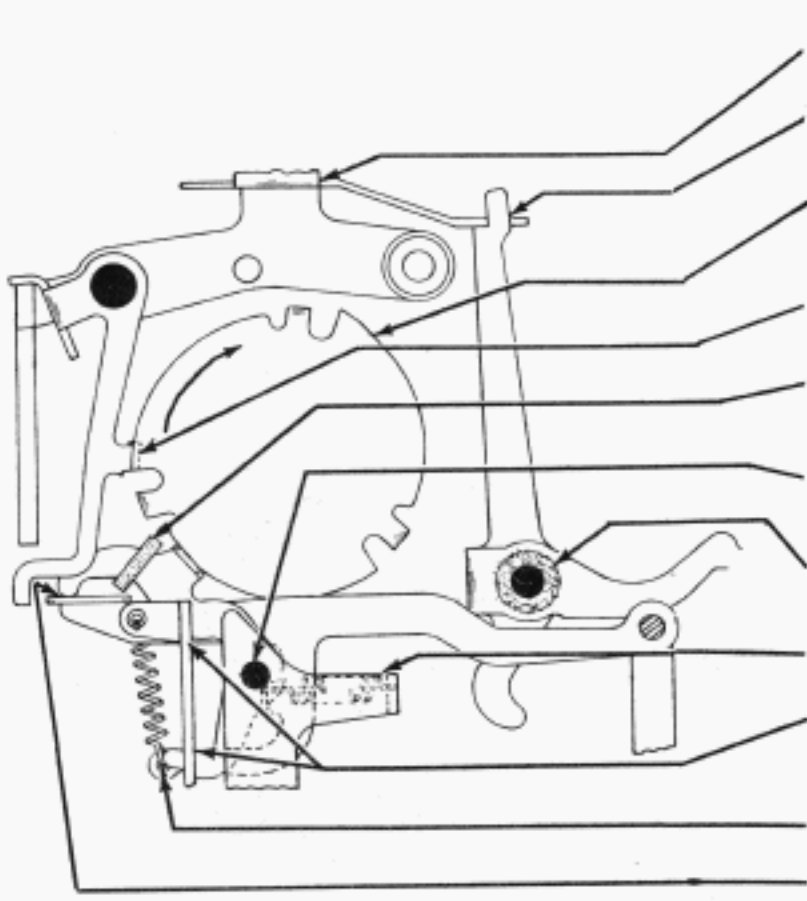

02	GUIDE SURFACES	BACK SPACE SLIDE ARM
02	ENGAGING SURFACE	BACK SPACE BAIL
G	CAMMING SURFACE	SPACING CLUTCH CAM DISK
02	ENGAGING SURFACE	SPACING CLUTCH CAM DISK
SAT	FELT OILER	TRIP LINK STRIPPER LEVER
02	BEARING SURFACE	TRIP LINK STRIPPER LEVER
SAT	FELT WASHERS (2 PLACES)	BACK SPACE BAIL
0	HOOKS–EACH END	SPRING
02	GUIDE SLOTS	TRIP LINK STRIPPER LEVER
0	HOOKS–EACH END	SPRING
02	ENGAGING SURFACE	TRIP LINK STRIPPER LEVER

(LEFT SIDE VIEW)

6.30 REST TYPING UNIT IN UPRIGHT POSITION
6.31 PAPER SPINDLE LATCH MECHANISM

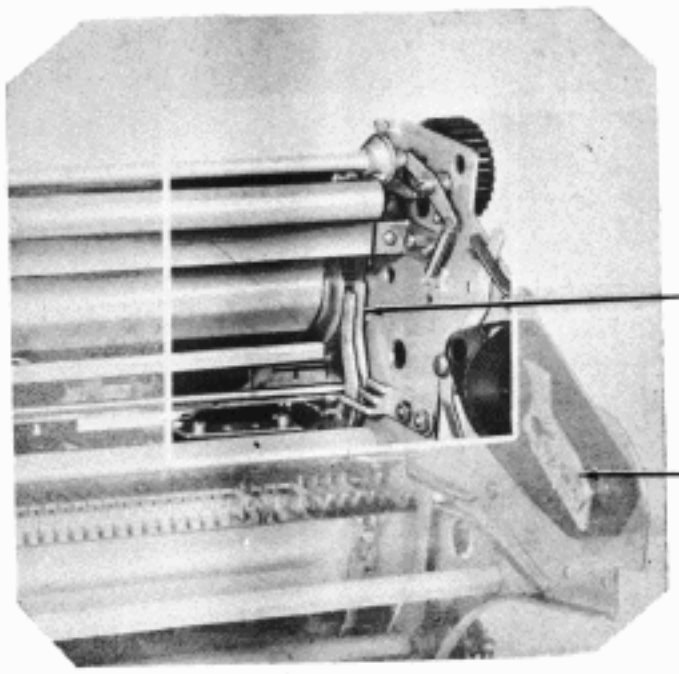

0 LATCH (2 PLACES) PAPER SPINDLE LATCH

(REAR VIEW)

6.32 LOCAL REVERSE LINE FEED MECHANISM

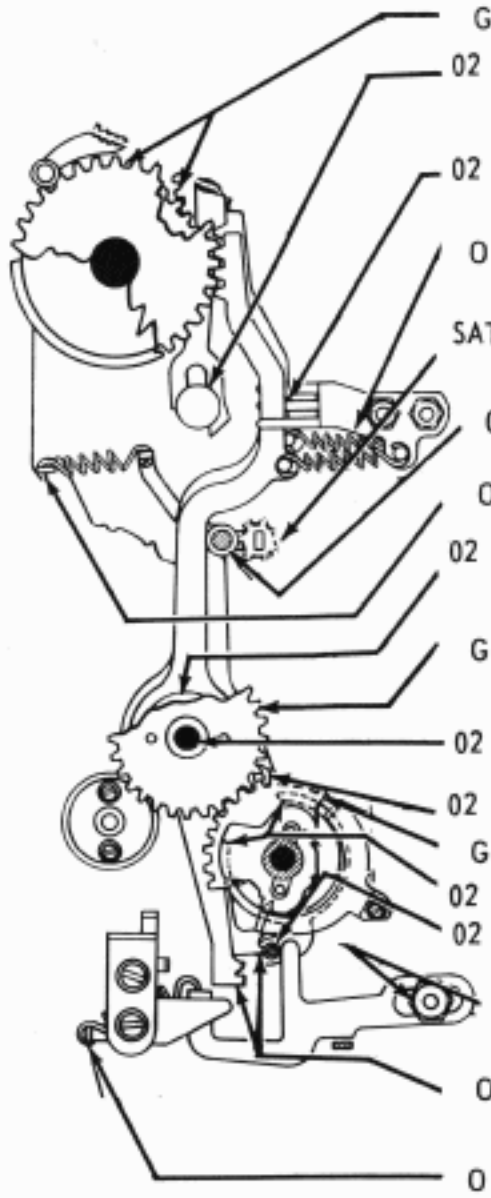

G	TEETH (2 GEARS)	PLATEN SPUR GEARS
02	GUIDE SURFACE	LINE FEED BAR RELEASE LEVER
02	GUIDE SURFACES (2 BARS)	LINE FEED BARS
O	HOOKS–EACH END	SPRINGS (2)
SAT	FELT OILER	LINE FEED BAR BELL CRANK
02	BEARING SURFACE	LINE FEED BAR BELL CRANK
O	HOOKS–EACH END	SPRING
02	BEARING SURFACES (2 BEARINGS)	LINE FEED BAR ECCENTRIC
G	TEETH	LINE FEED CLUTCH SPUR GEAR
02	BEARING SURFACE	SPUR GEAR
02	BEARING SURFACE	LINE FEED BAR BELL CRANK
G	TEETH	PLATEN SPUR GEAR
02	BEARING SURFACES	INTERMEDIATE LEVER
02	BEARING SURFACE	ROLLER
02	BEARING SURFACE	REVERSE LINE FEED SLIDE LINK
O	ENGAGING SURFACES (2 PLACES)	LINE FEED BARS (2)
O	HOOKS–EACH END	SPRING

(RIGHT SIDE VIEW)

6.33 REST TYPING UNIT IN UPRIGHT POSITION.

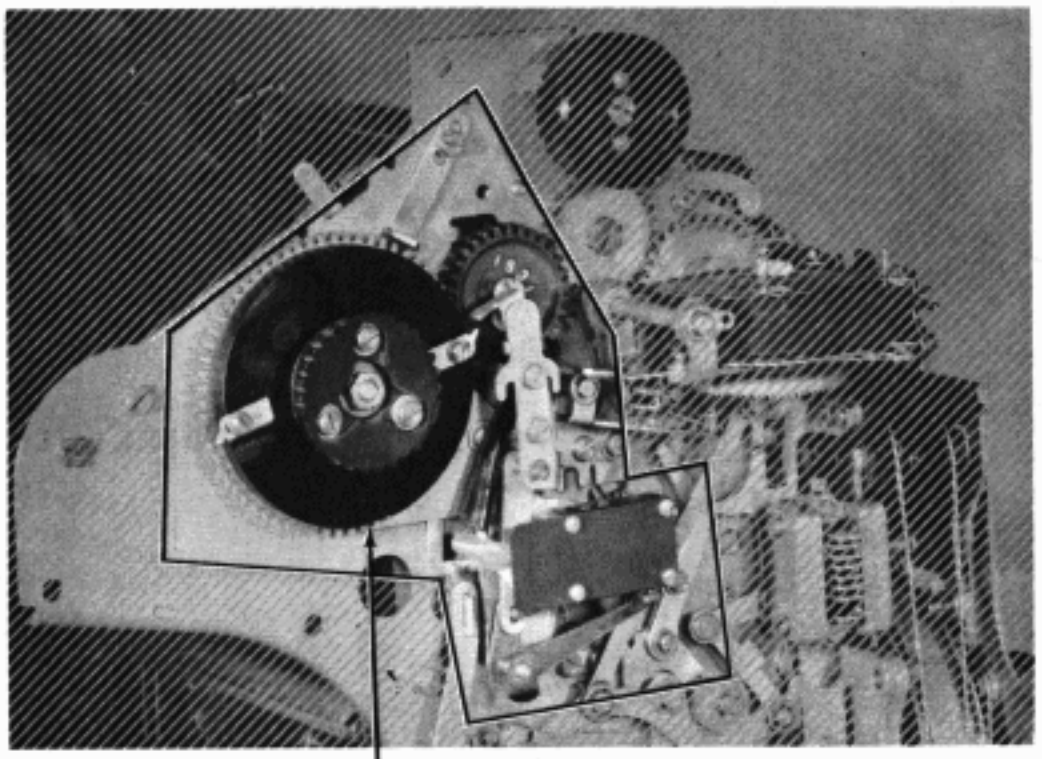

(LEFT SIDE)

6.34 PAGE FEED-OUT MECHANISM

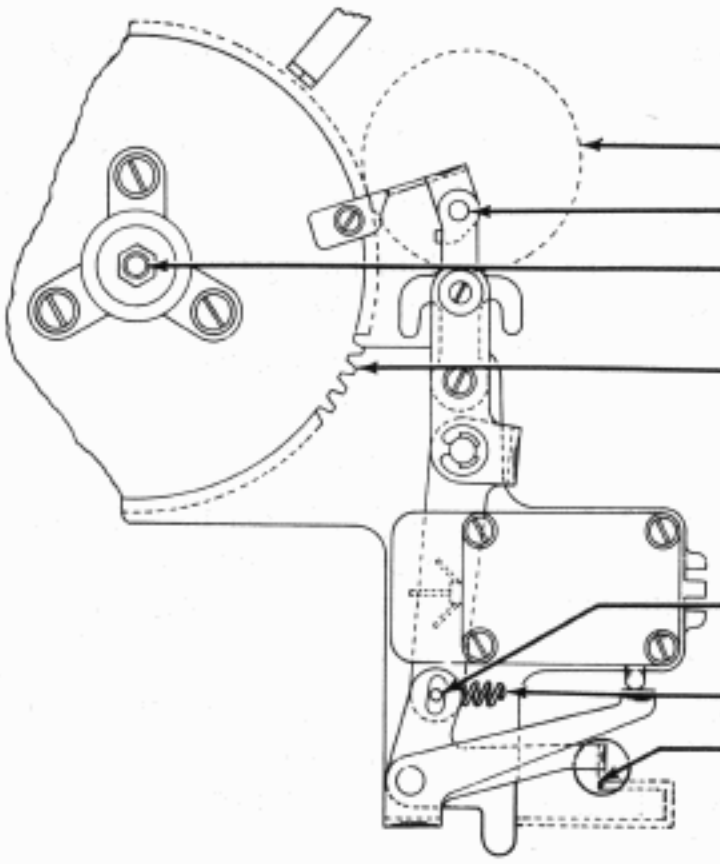

(LEFT SIDE)

6.35 SIGNAL LINE BREAK MECHANISM (BASE)

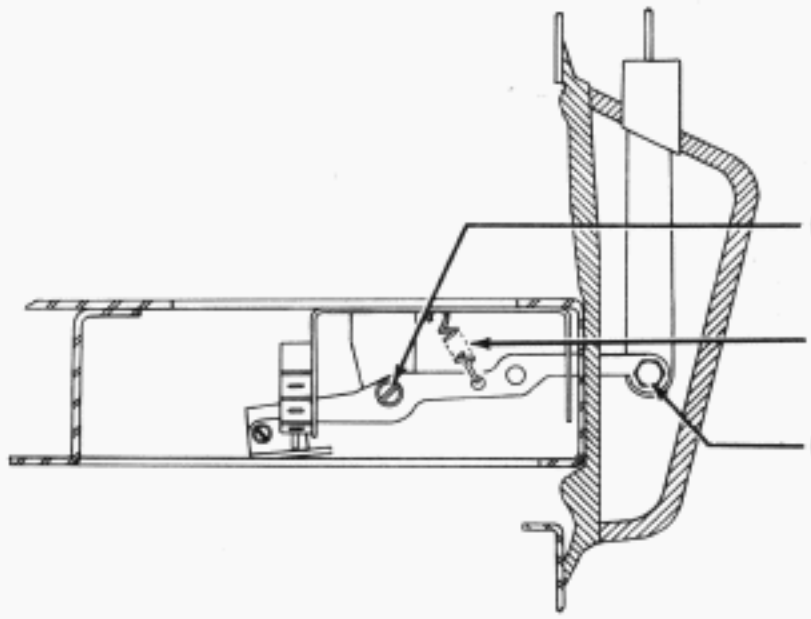

6.36 REST BASE IN UPRIGHT POSITION

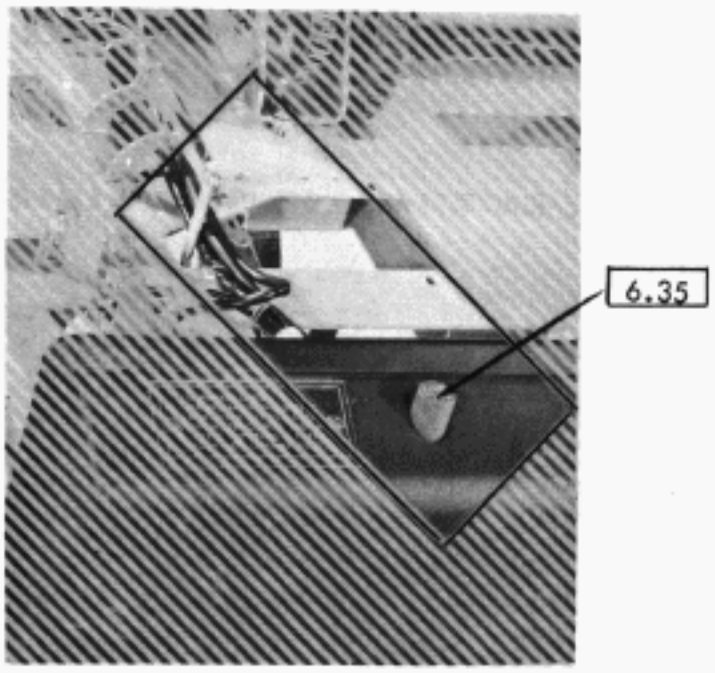

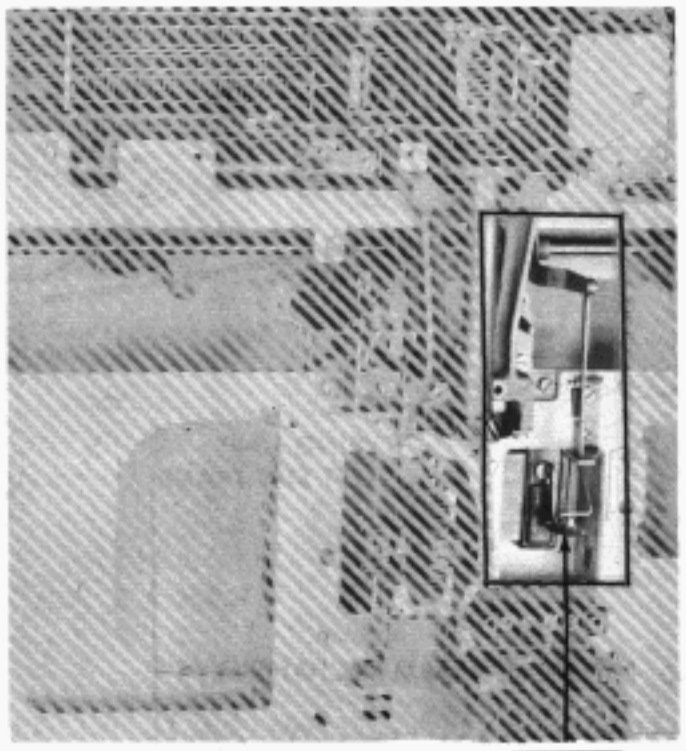

6.37 PAPER FEED OUT MECHANISM (KEYBOARD)

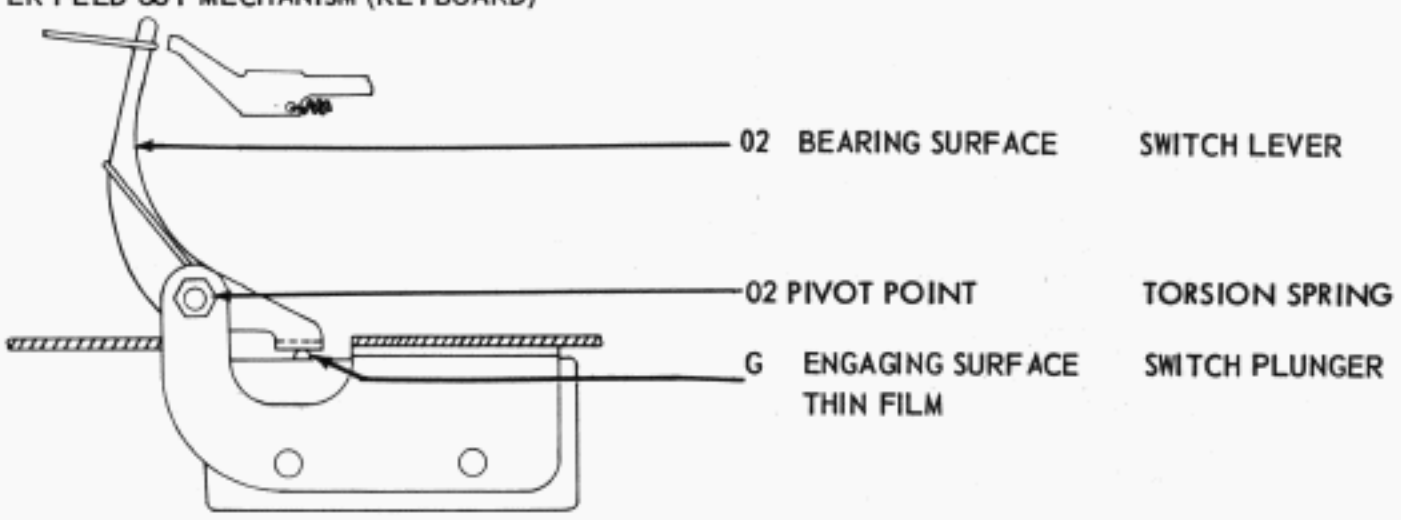

6.38 CABINET DOME OPEN

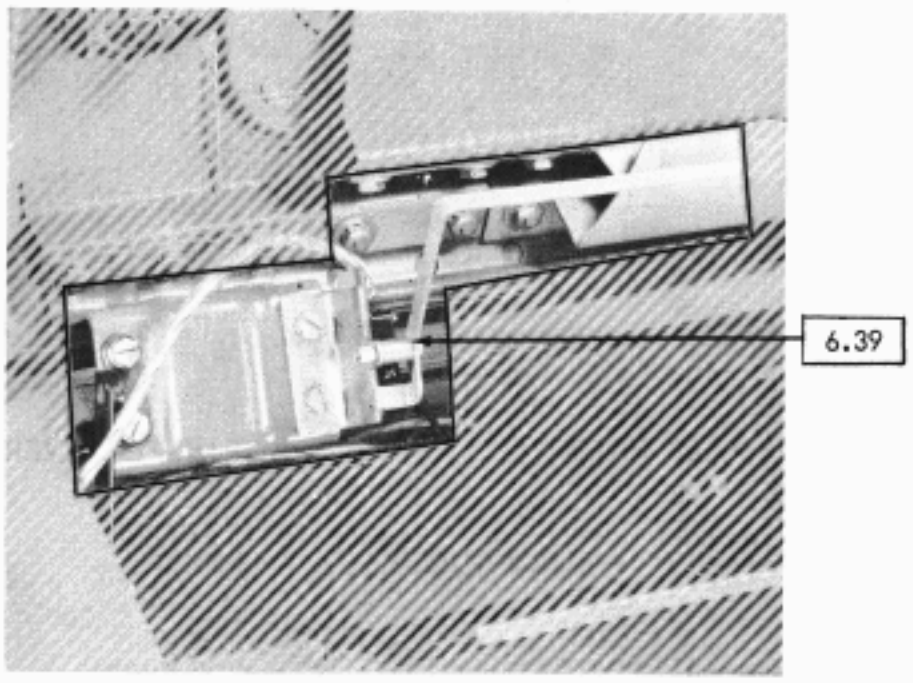

6.39 END-OF-FORM ALARM MECHANISM (CABINET)

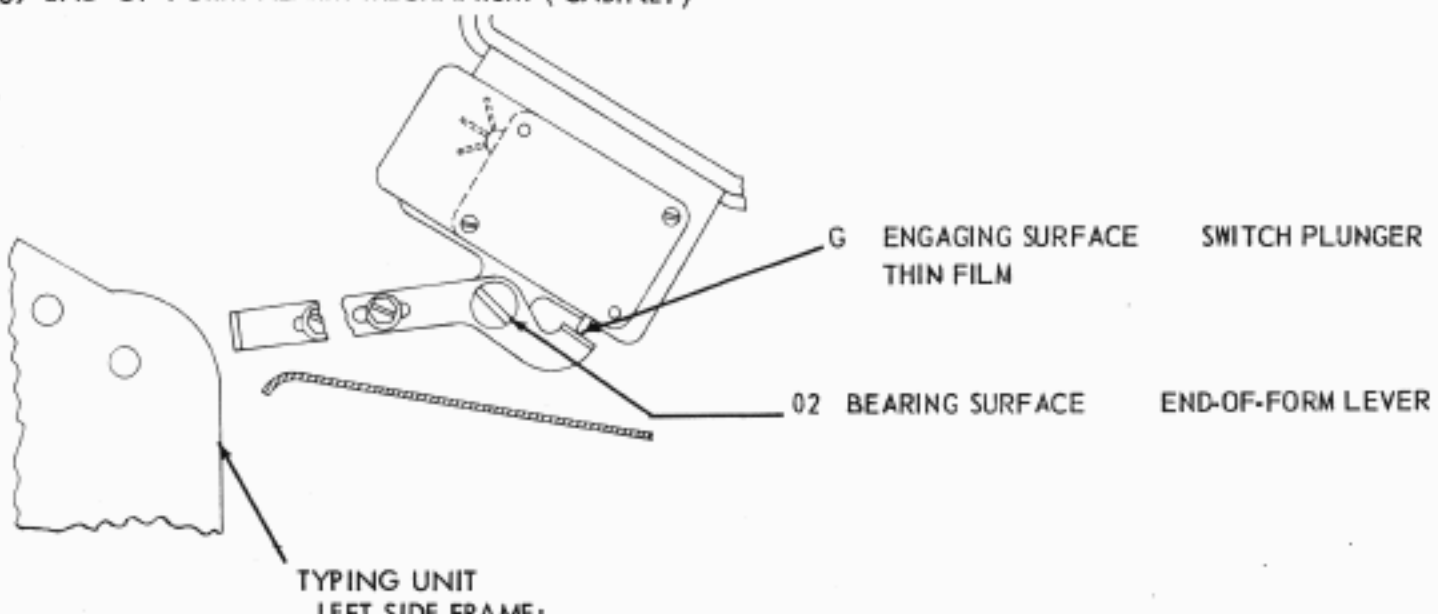

6.40 PAPER-OUT ALARM MECHANISM

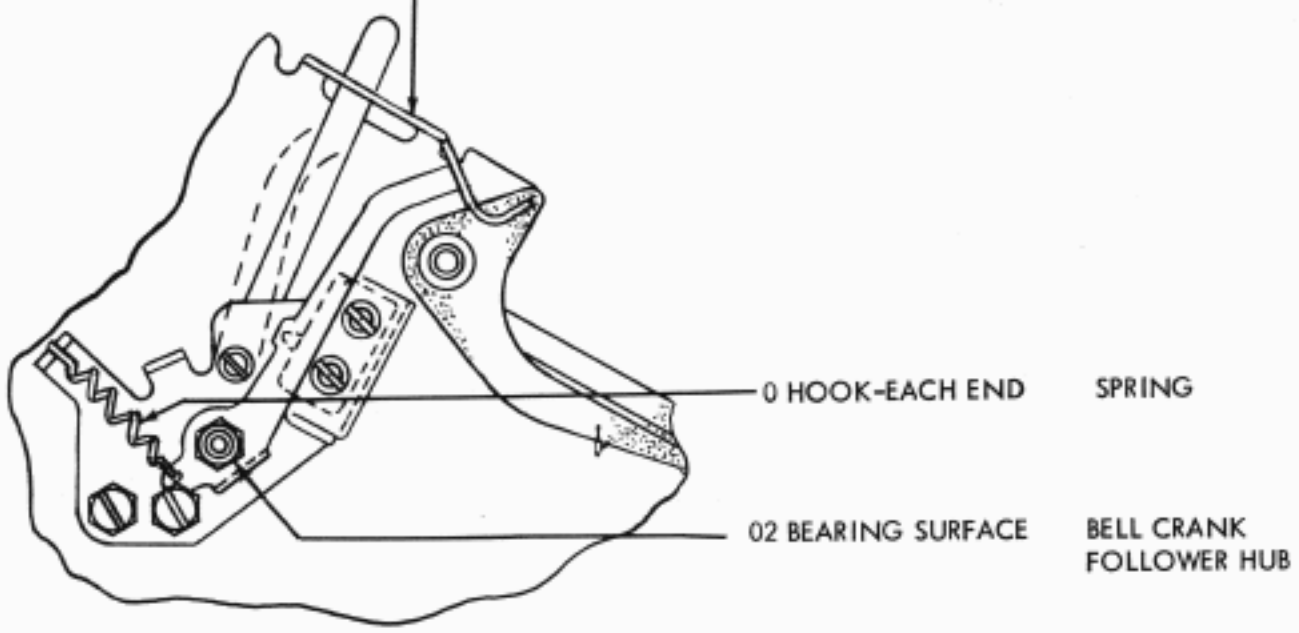

6.41 CONTINUOUS SPACING MECHANISM

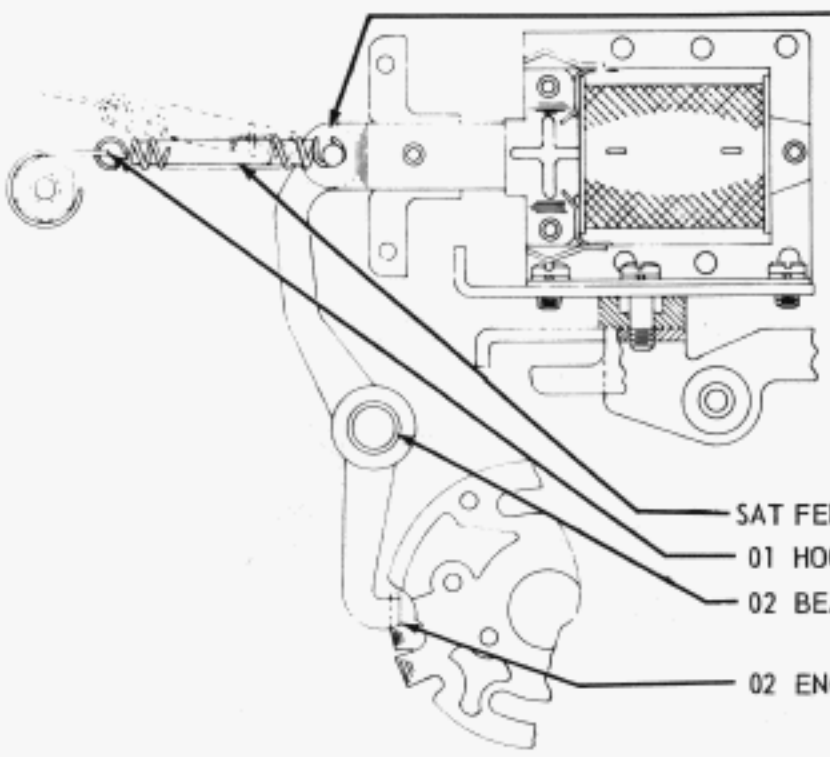

6.42 SLIDE ARM BRACKET

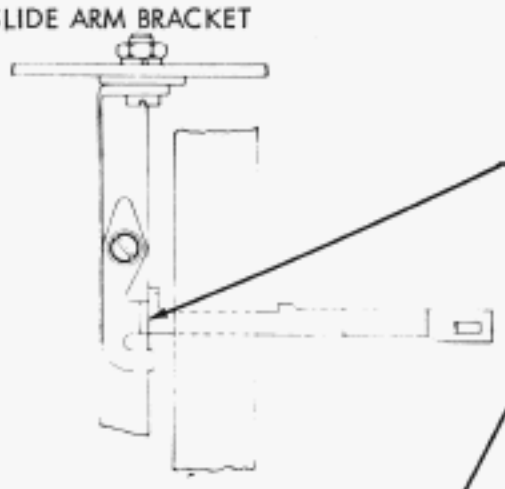

6.43 COMPRESSION SPRING

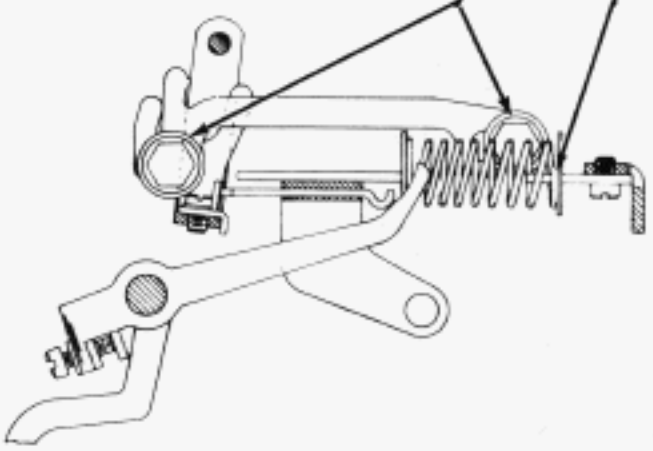

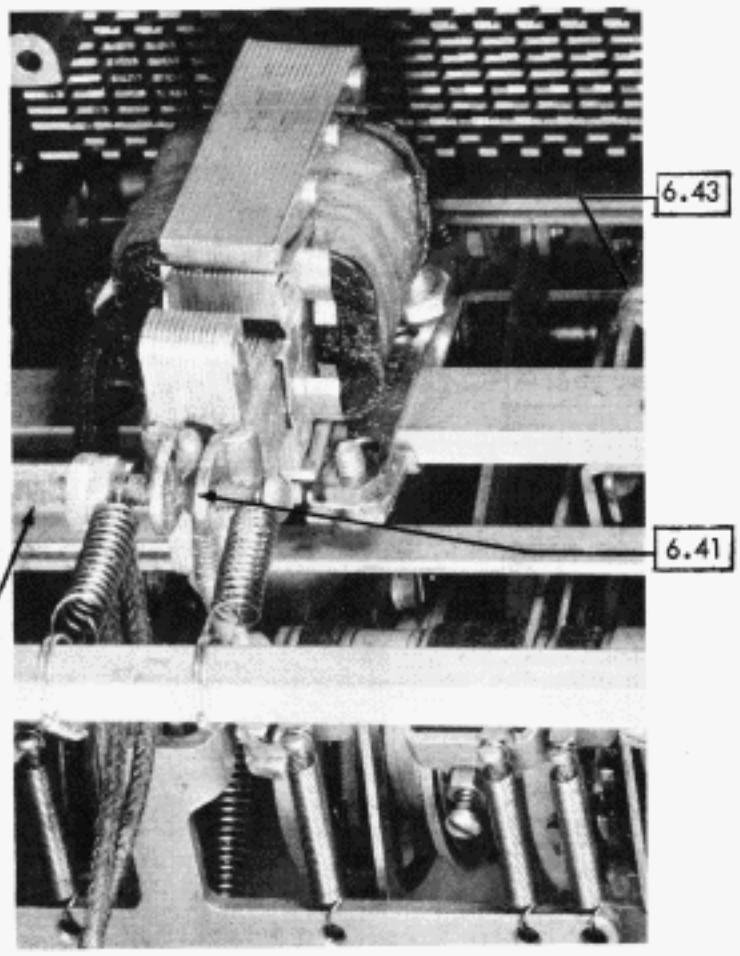

6.44 REST TYPING UNIT IN UPRIGHT POSITION

6.45 REST TYPING UNIT IN UPRIGHT POSITION

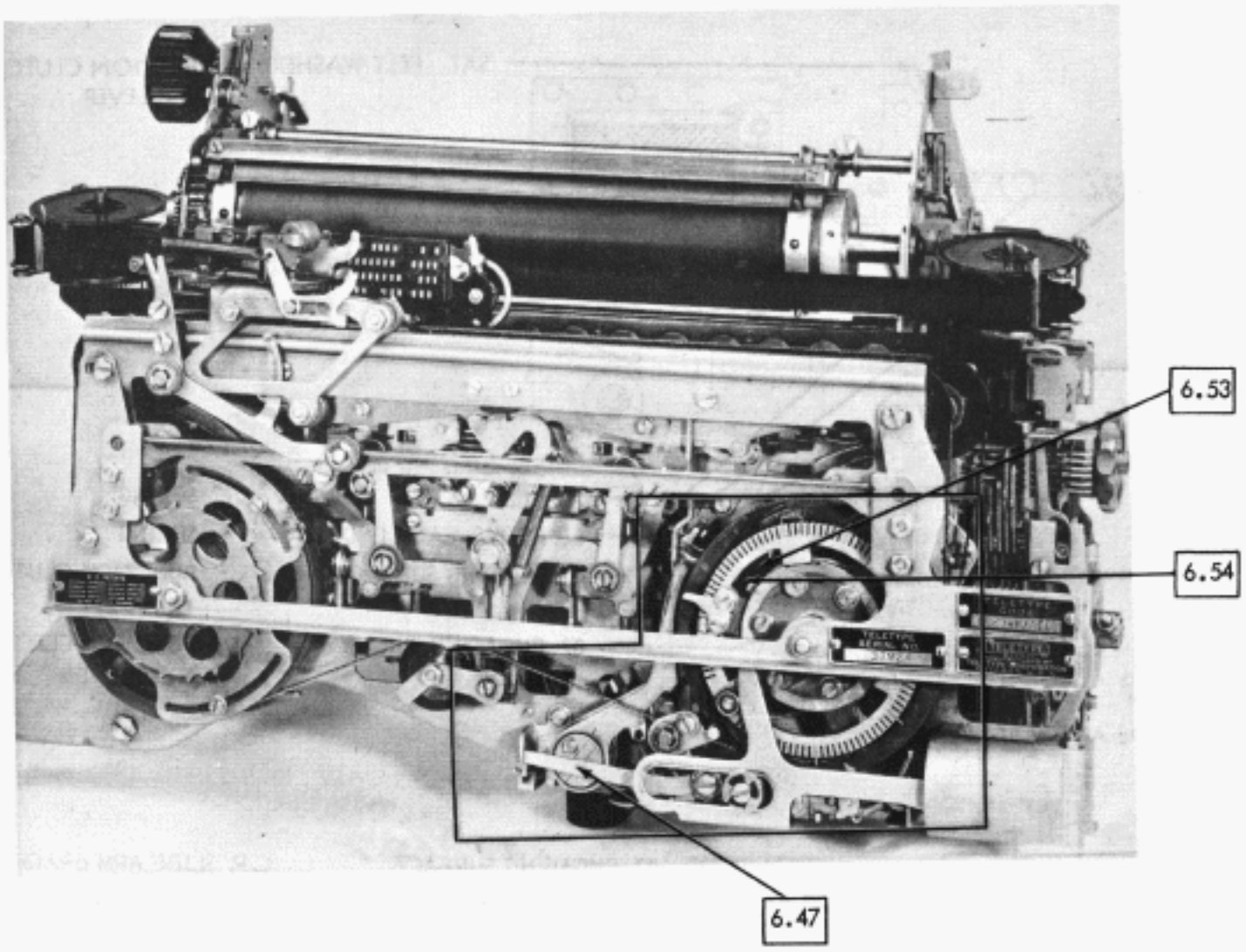

6.46 REST TYPING UNIT BOTTOM SIDE UP

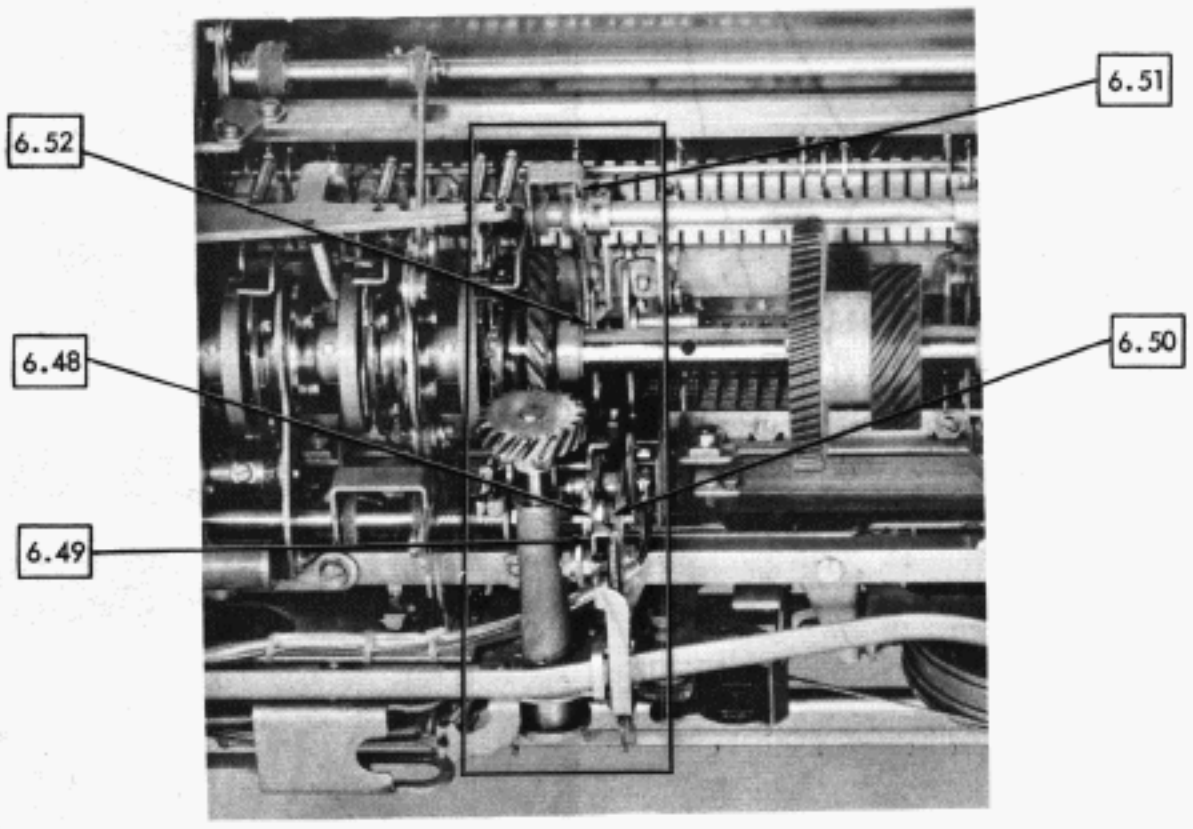

6.47 HORIZONTAL TABULATOR - BLOCKING LEVER

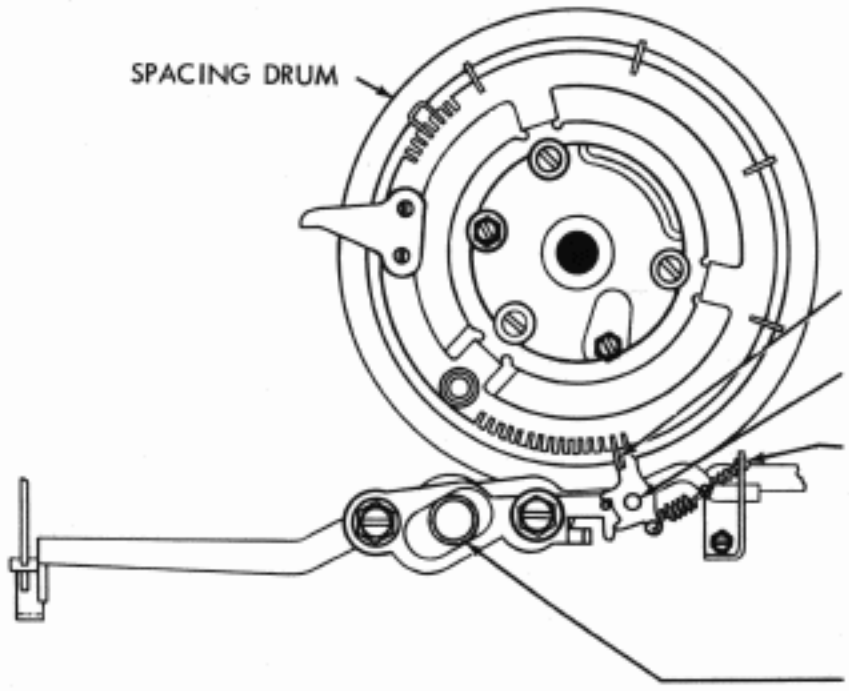

02	ENGAGING SURFACE	TABULATOR STOPS
02	BEARING SURFACE	TABULATOR PAWL
0	HOOKS - EACH END	SPRINGS
02	BEARING AND GUIDE SURFACE	BLOCKING LEVER

6.48 HORIZONTAL TABULATOR - SLIDE ARM

6.49 HORIZONTAL TABULATOR - OPERATING LEVER

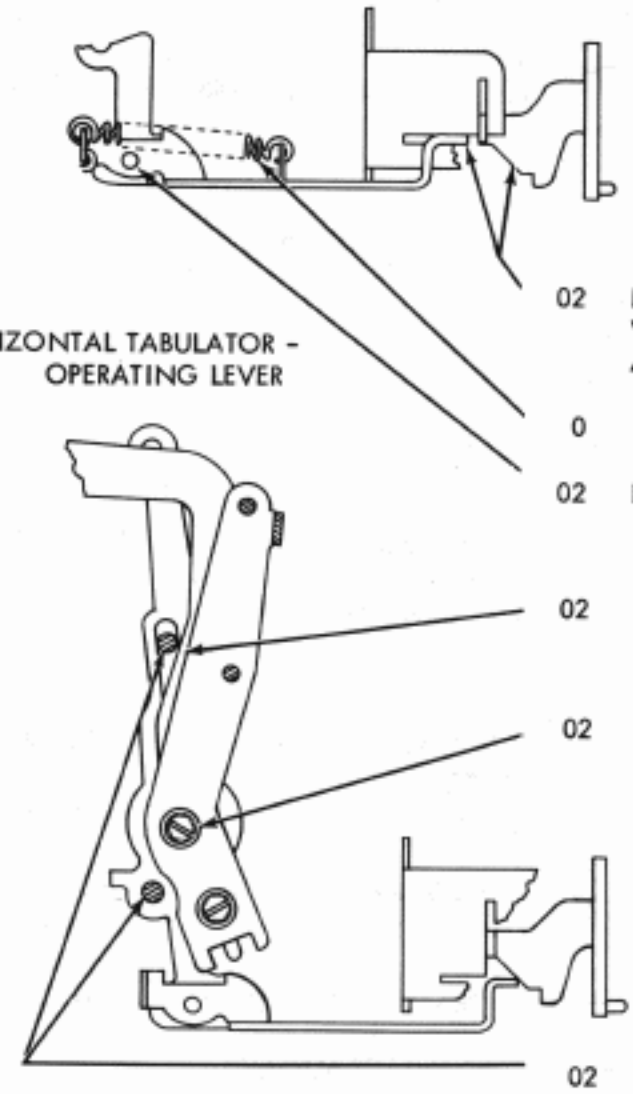

02	ENGAGING SURFACE WITH BLOCKING LEVER AND BRACKET	OPERATING LEVER SLIDE ARM
0	HOOKS - EACH END	SLIDE ARM SPRING
02	BEARING SURFACE	OPERATING LEVER SLIDE ARM
02	CONTACTING SURFACE WITH ADJUSTING PLATE	OPERATING LEVER
02	BEARING SURFACE	TRIP LEVER ARM LATCH BAIL
02	BEARING SURFACE	OPERATING LEVER

6.50 HORIZONTAL TABULATOR - LATCH BAIL

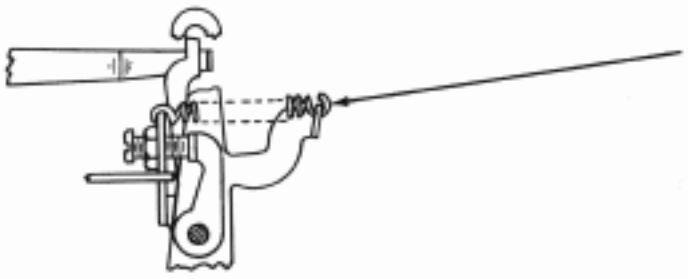

0	HOOKS - EACH END	LATCH BAIL SPRING

6.51 HORIZONTAL TABULATOR - OPERATING LEVER

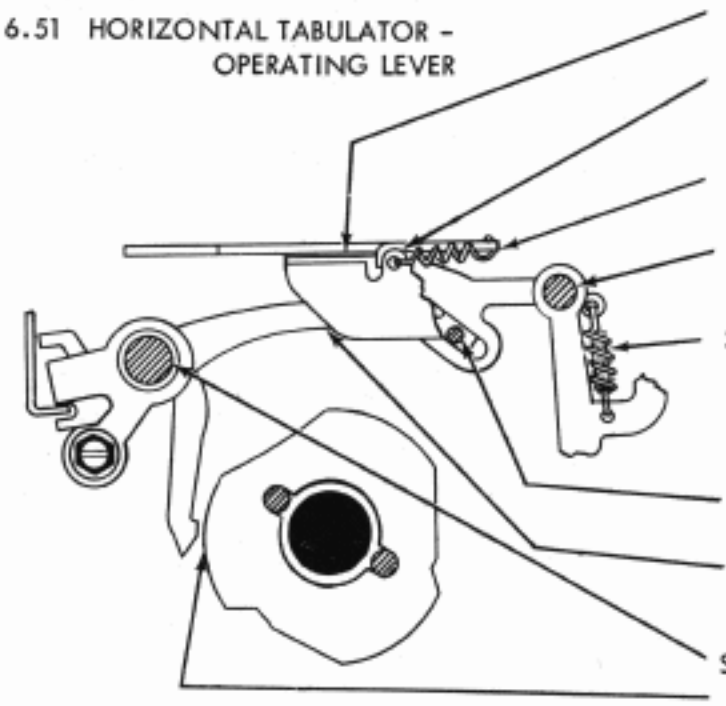

02	GUIDE SURFACES	OPERATING LEVER
02	CONTACT WITH SLIDE ARM	OPERATING LEVER
0	HOOKS - EACH END	SLIDE ARM SPRING
02	BEARING SURFACE	OPERATING LEVER
SAT	FELT WICK	SPRING
02	SLOT CAMMING SURFACE	OPERATING LEVER
02	BRACKET CONTACT SURFACE	OPERATING LEVER
SAT G	FELT WASHERS CAMMING SURFACE	STRIPPER BAIL SHAFT SPACING CLUTCH RESTORING CAM

6.52 HORIZONTAL TABULATOR - INTERMEDIATE BAIL

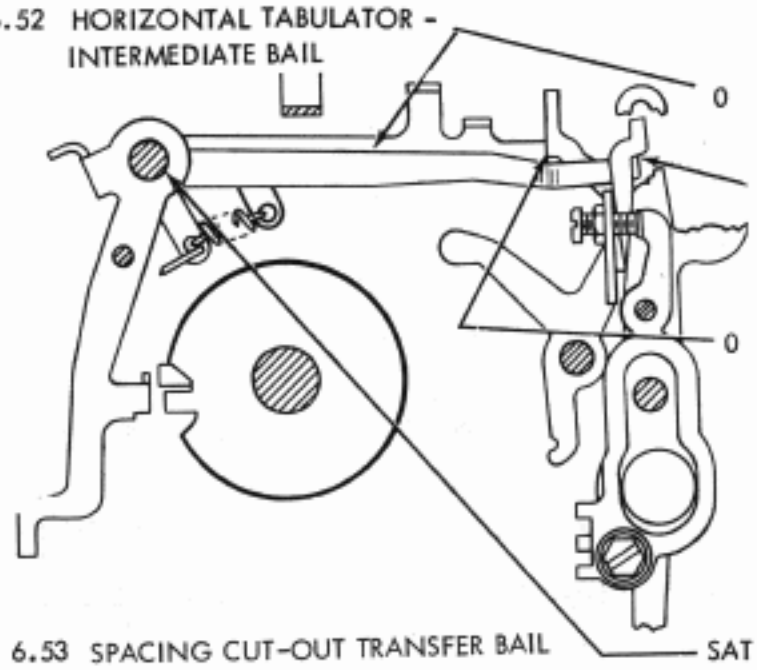

0	CONTACT SURFACE TRIP LEVER ARM	INTERMEDIATE BAIL
02	CONTACTING SURFACE	SPACING TRIP LEVER ARM
0	CONTACT SURFACE SPACING TRIP LEVER	INTERMEDIATE BAIL
SAT	FELT WASHER	TRIP LEVER ARM SHAFT

6.53 SPACING CUT-OUT TRANSFER BAIL

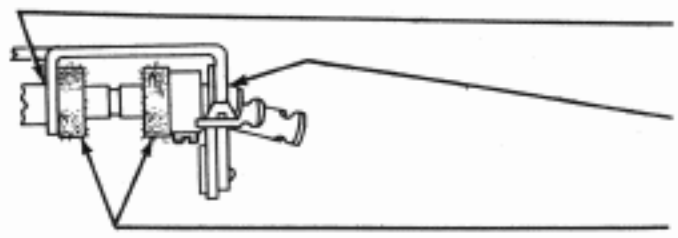

02	BEARING SURFACE	SPACING CUTOUT TRANSFER BAIL
02	BAIL CONTACTING SURFACE	SPACING CUTOUT TRANSFER BAIL
SAT	FELT WASHER	TRANSFER BAIL STUD

6.54 BAIL EXTENSION ARM

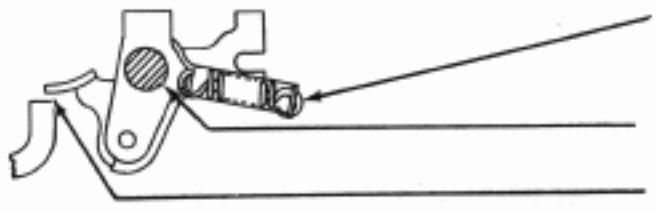

0	HOOKS - EACH END	SPACE SUPPRESSION BY PASS SPRING.
02	BEARING SURFACE	BAIL EXTENSION ARM
02	CONTACT SURFACE WITH SPACING CUT-OUT LEVER	BAIL EXTENSION ARM

6.55 OFF-LINE CONTACTS

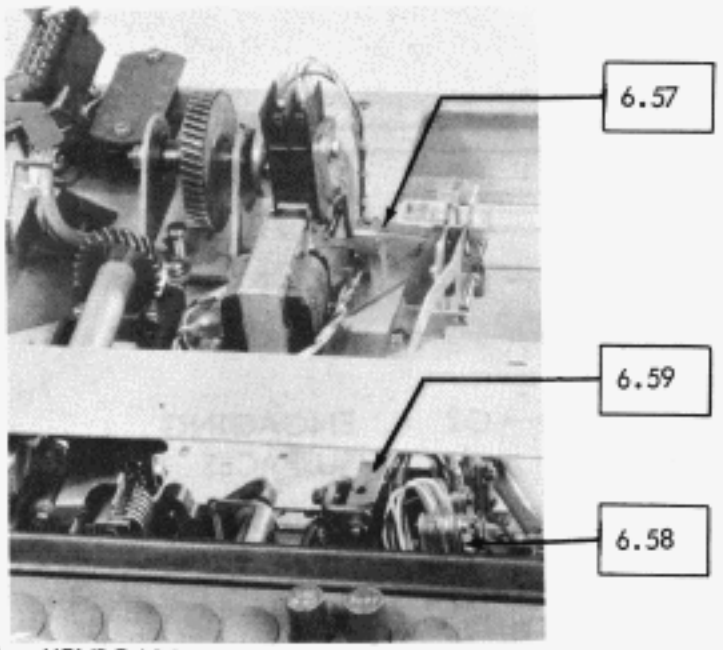

6.56 KEYBOARD - TOP VIEW

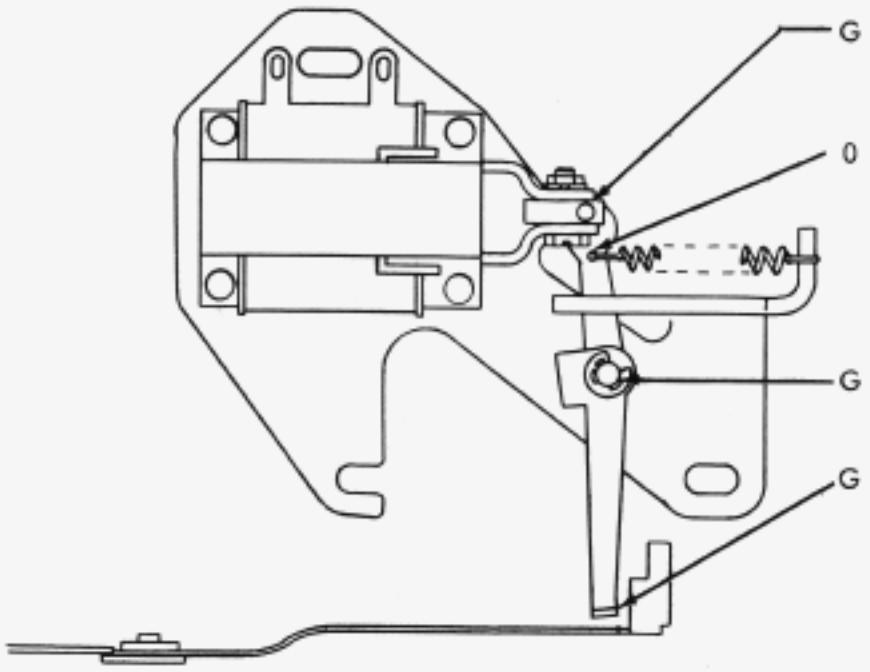

G	FORK AND PIN	SOLENOID ARMATURE
0	HOOKS - EACH END	SPRING
G	BEARING SURFACE AND RETAINING RING	SOLENOID
G	ENGAGING SURFACE	BACKSPACE LINK

6.57 SOLENOID BAIL

G	ENGAGING SURFACE	CONTACT INSULATOR

6.58 CONTACT INSULATORS

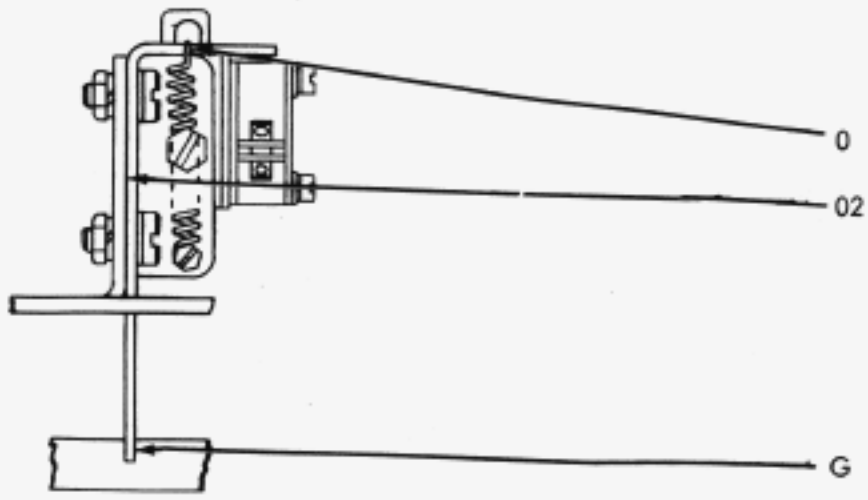

0	HOOKS - EACH END	SPRING
02	SLIDING SURFACE	OPERATING LEVER
G	ENGAGING SURFACE	FUNCTION LEVER

6.59 SWITCH OPERATING LEVER

6.55A TWO COLOR RIBBON MECHANISM

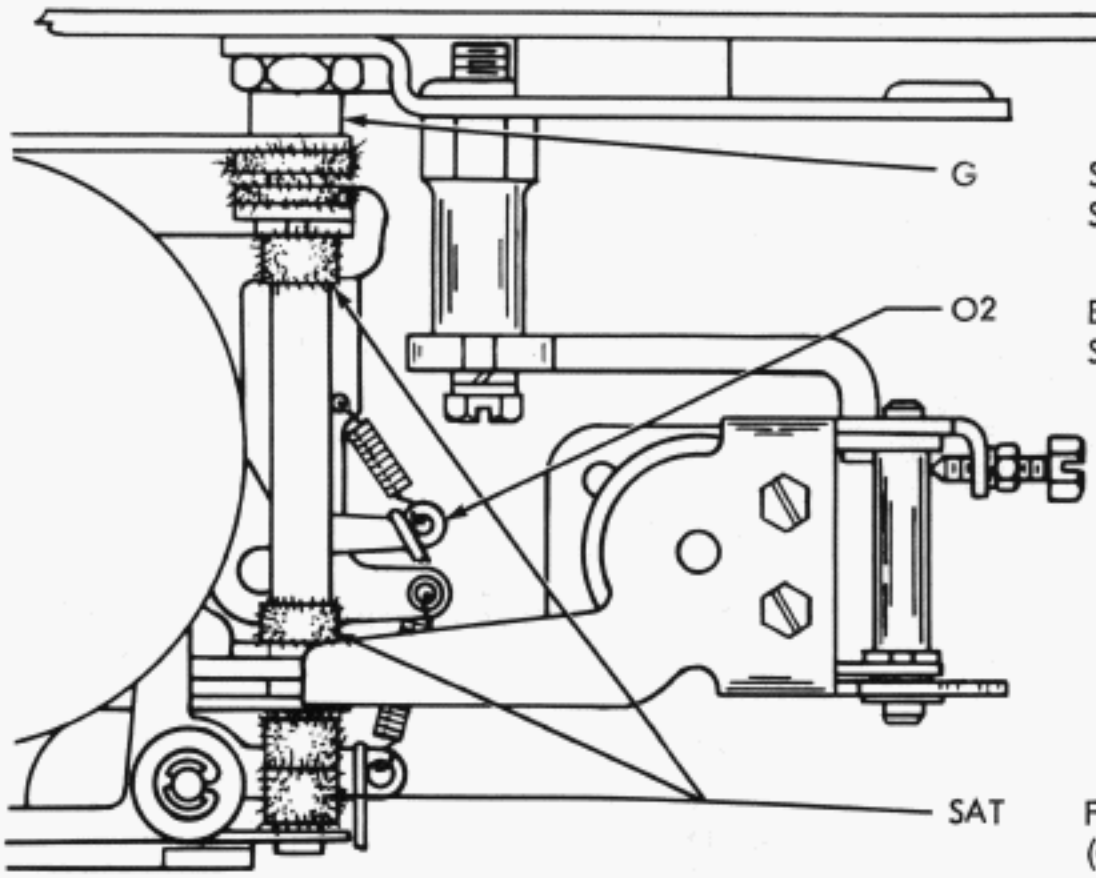

G	SHAFT MTG. SURFACE	OSC. LEVER & ROLLER BAIL SUPPORT SHAFT
O2	ENGAGING SURFACES	RIBBON REVERSING LEVERS
SAT	FELT WASHERS (OSC. LEVER & ROLLER BAIL)	RIBBON SPOOL BRACKET SHAFT

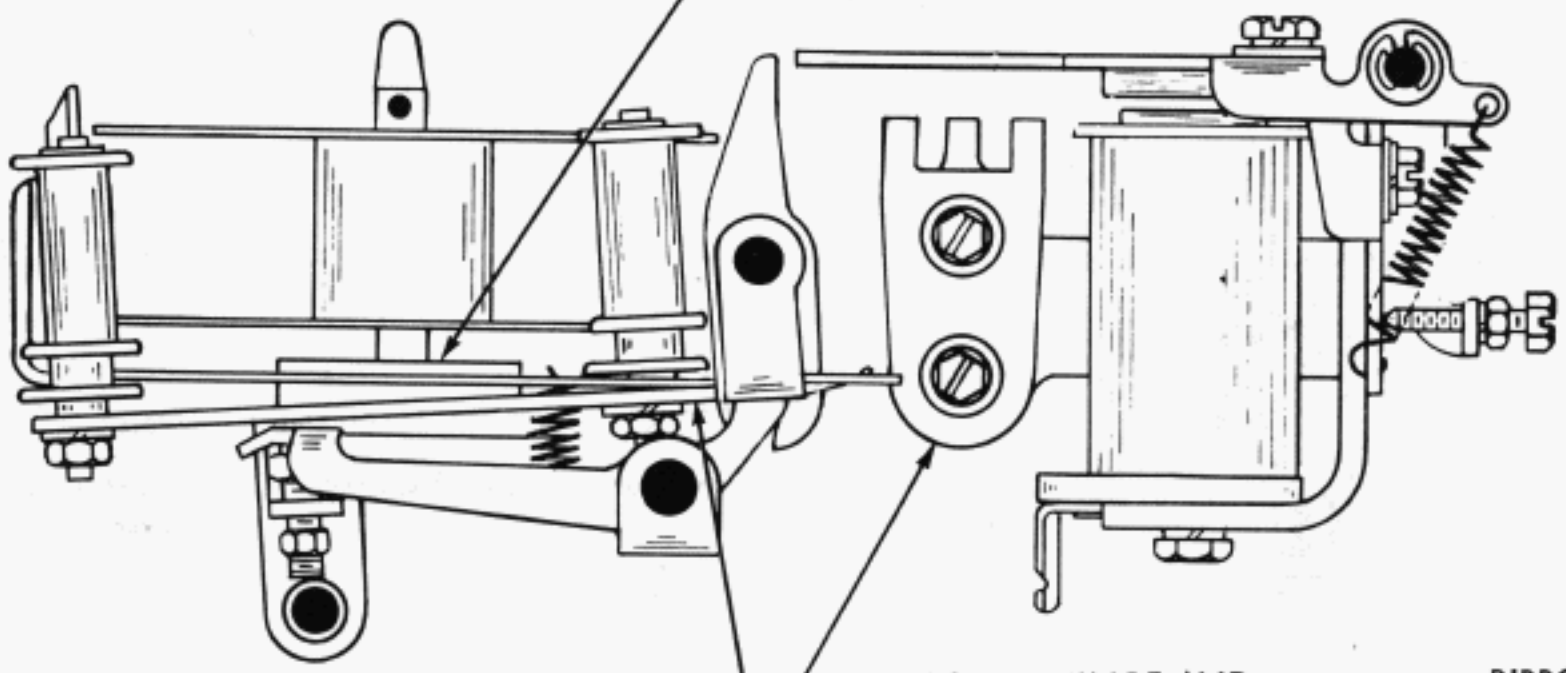

SAT	FELT WASHERS	RIBBON RATCHET
O2	HINGE AND STOP LEVER	RIBBON MAGNET BRACKET
O2	ENGAGING SURFACES	RIBBON SPOOL BRACKET

6.60 UNIVERSAL CONTACT MECHANISM (STUNT BOX)

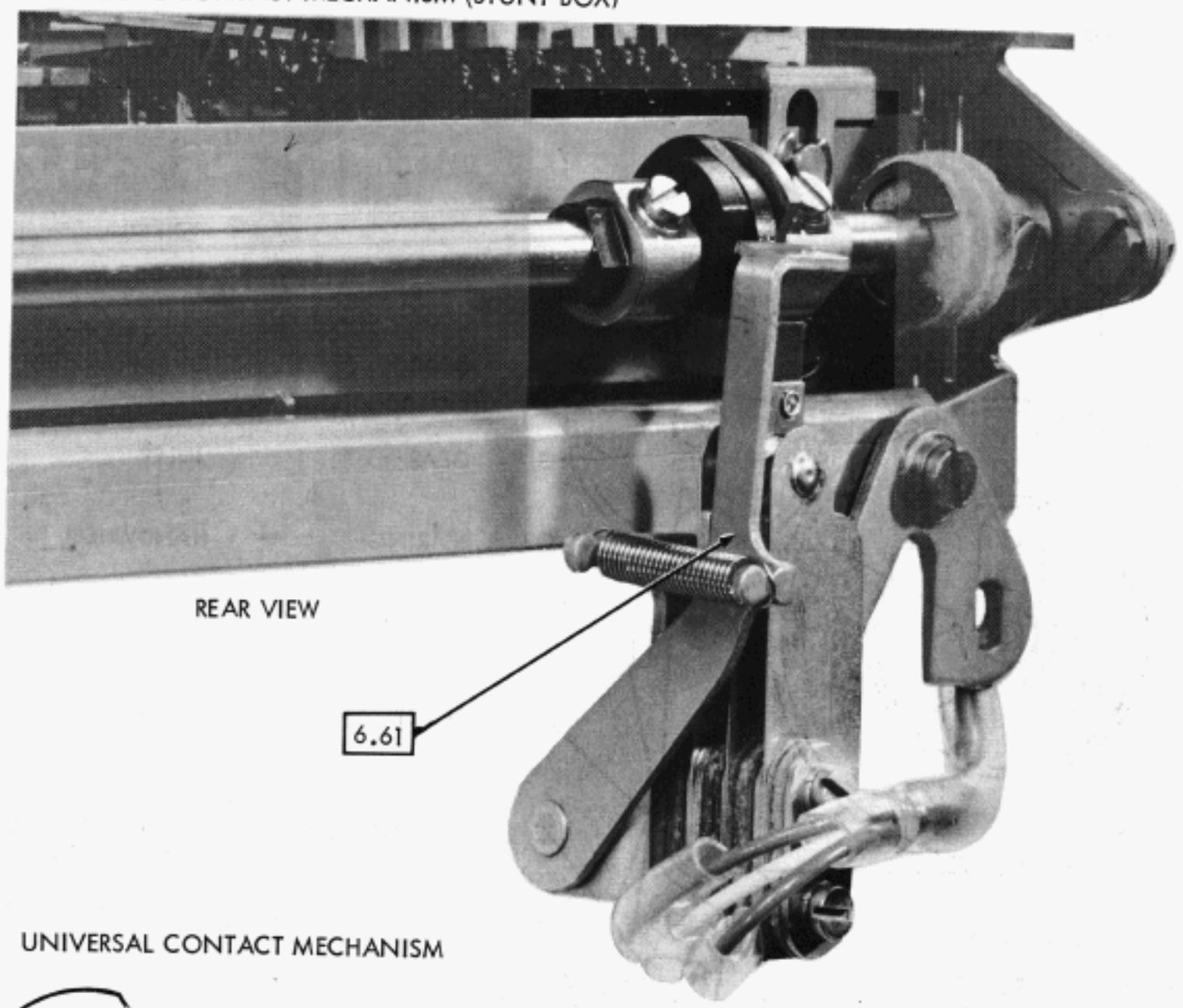

REAR VIEW

6.61 UNIVERSAL CONTACT MECHANISM

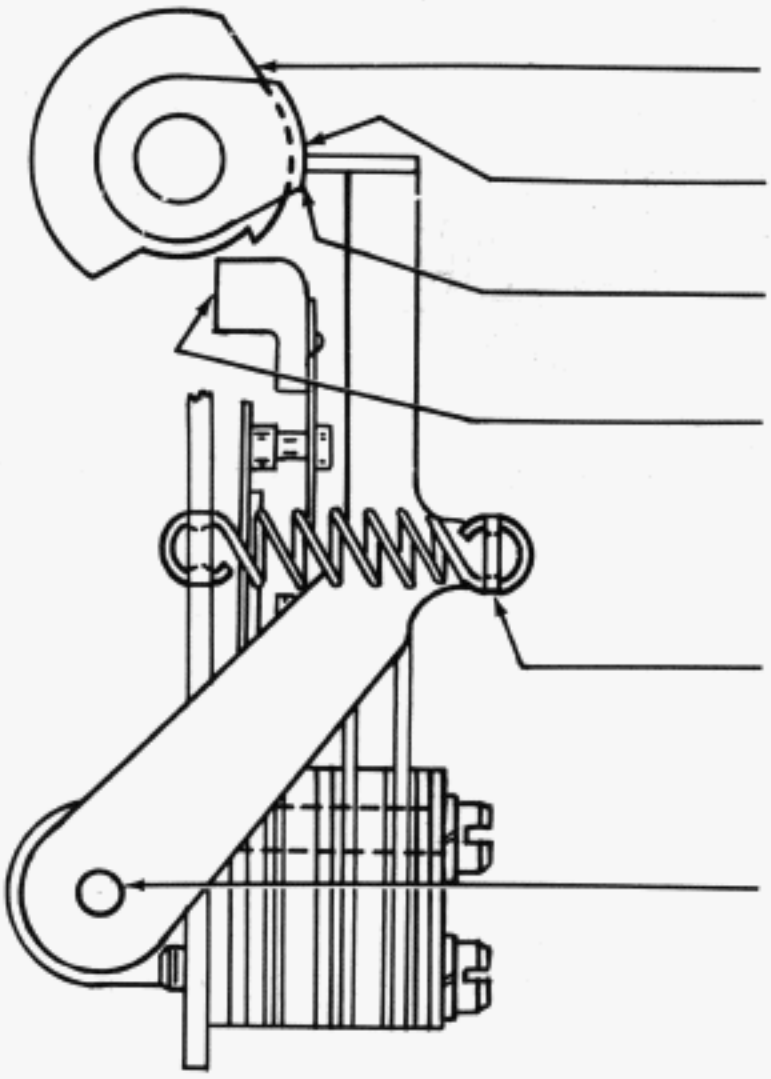

O2	BEARING SURFACE	LATCH CAM
G	SURFACE	CAMS
G	LATCHING SURFACE	LATCH LEVER
G	ENGAGING SURFACE	INSULATOR
O	HOOKS - EACH END	SPRING
O	BEARING SURFACE	LATCH LEVER

6.62 VERTICAL TABULATOR AND TRANSMITTER DISTRIBUTOR CONTROL MECHANISM

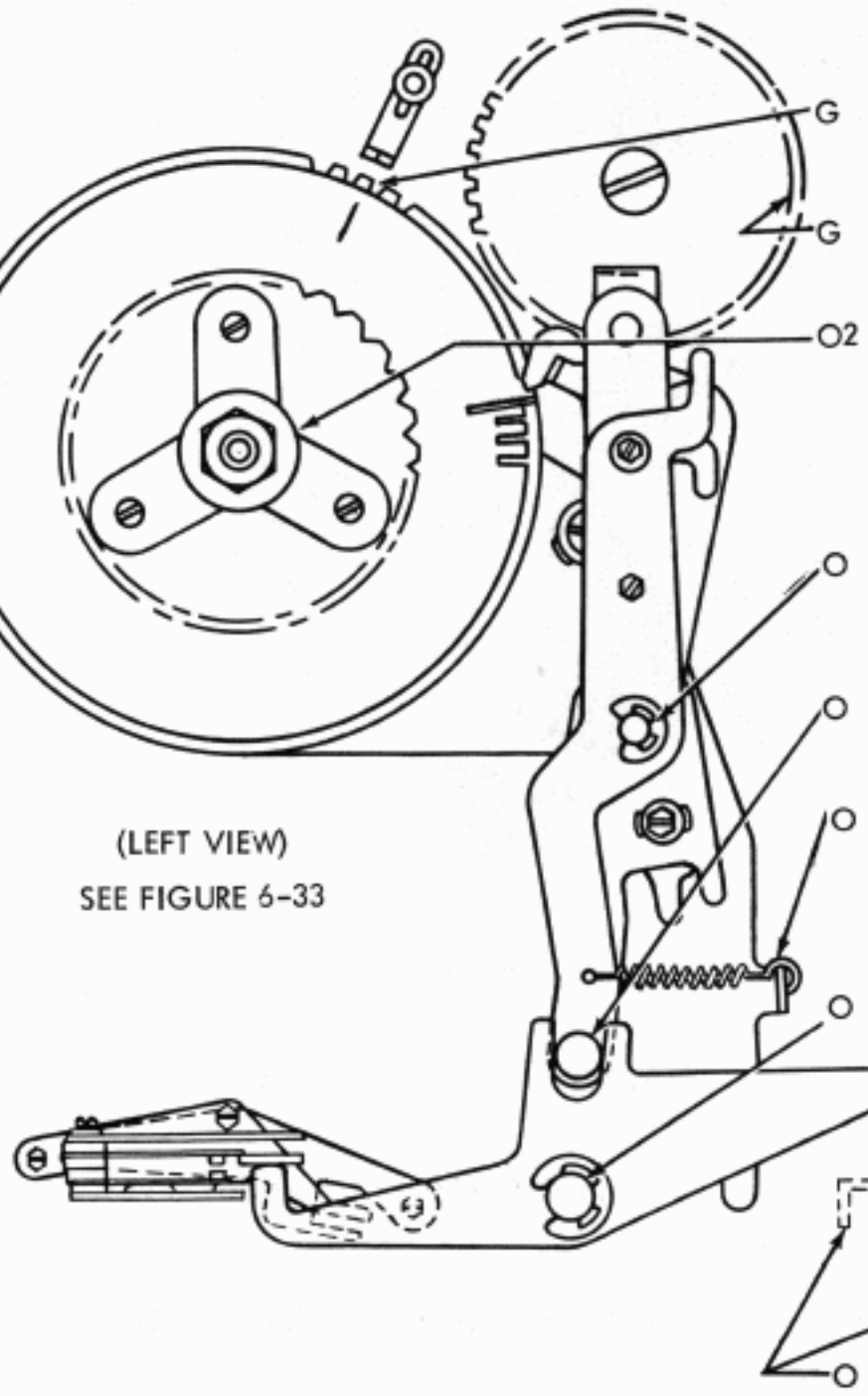

(LEFT VIEW)
SEE FIGURE 6-33

G	GEAR	PAGE FEED-OUT
G	GEAR	IDLER
O2	BEARING	HANDWHEEL
O	PIVOT	ADJUSTABLE ARM
O	BEARING SURFACE	ADJUSTABLE ARM AND BLOCKING LEVER
O	SPRING (BOTH ENDS)	BLOCKING LEVER
O	PIVOT	BLOCKING LEVER
O	SLIDES (2)	PAGE FEED-OUT AND VERTICAL TAB

6.63 FORM ALIGNMENT MECHANISM

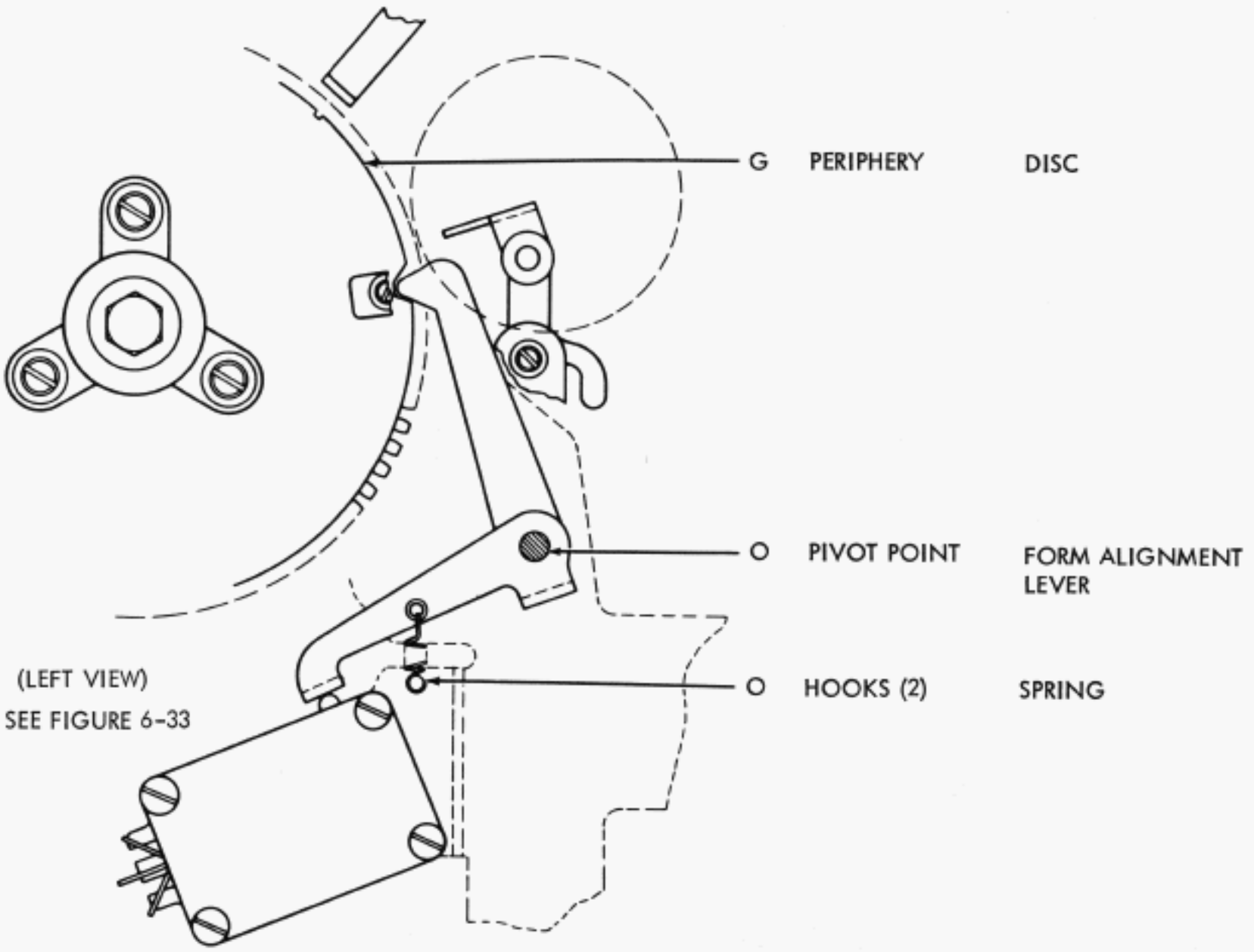

6.64 UNIVERSAL CONTACT MECHANISM (SELECTOR)

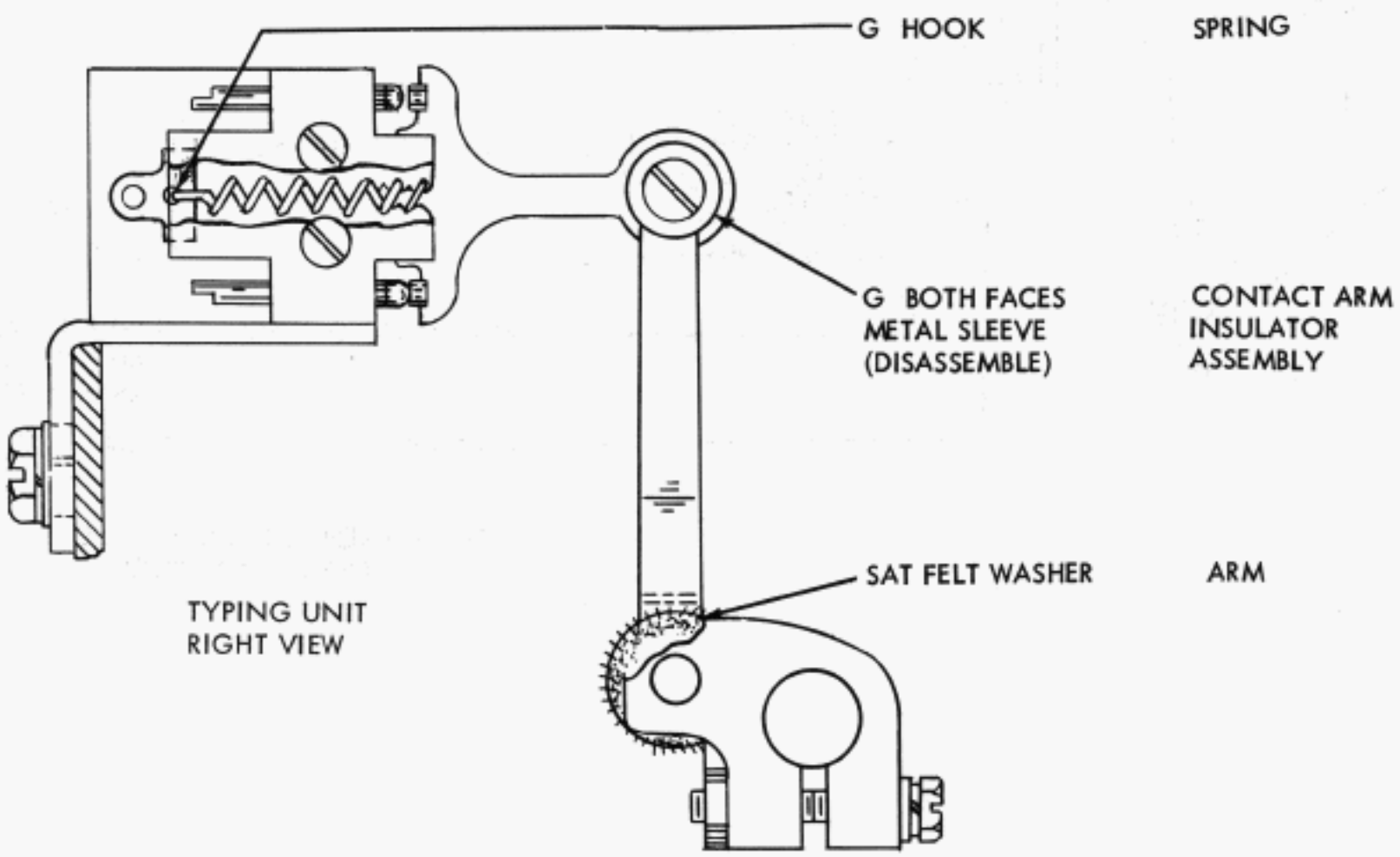

6.65 D.C. MAGNET OPERATED PRINT SUPPRESSION MECHANISM

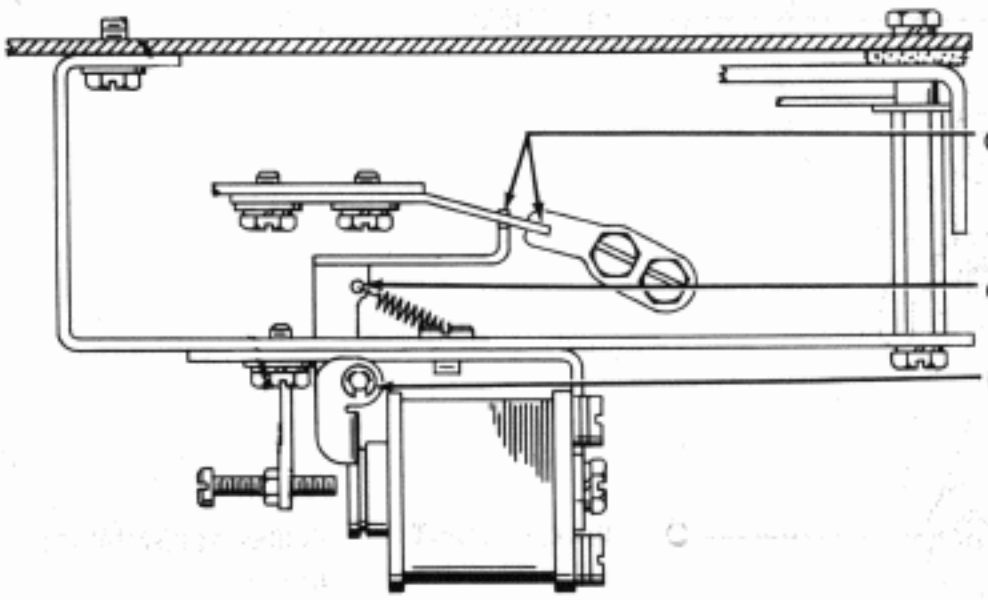

OP VIEW - LEFT SIDE

G	BLOCKING SURFACE	ARMATURE EXTENSION BLOCKING BAIL EXTENSION SUPPRESSION ARM
O	HOOKS (2)	SPRING
O	PIVOT POINT (2)	ARMATURE

NOTE --- KEEP OIL AND GREASE OFF OF POLE FACE

6.66 LETTERS-FIGURES CODE BAR SHIFT MAGNET MECHANISM

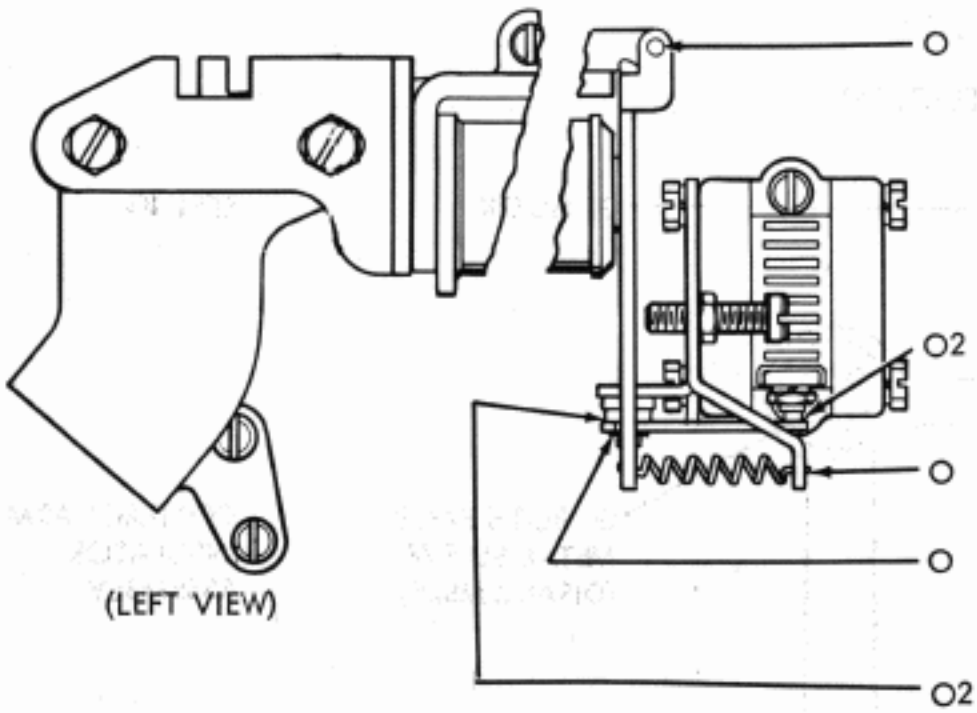

(LEFT VIEW)

O	PIVOT POINTS (2)	SHIFT MAGNET ARMATURE
O2	ENGAGING SURFACE	TRANSFER LEVER AND CODE BAR PILOT PIN
O	HOOKS	SPRING
O	ENGAGING SURFACE	SHIFT MAGNET ARMATURE AND TRANSFER LEVER
O2	BEARING	TRANSFER LEVER

NOTE --- KEEP OIL AND GREASE OFF OF POLE PIECE

6.67 PRINT SUPPRESSION AND OFF LINE STUNT SHIFT CONTROL MECHANISM

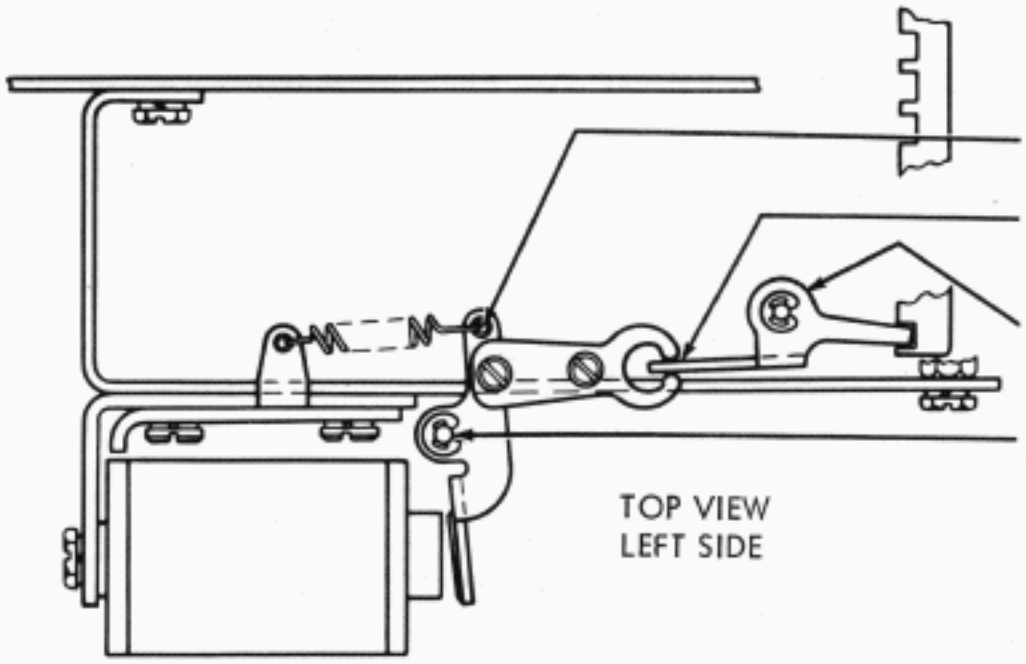

O HOOKS (2) SPRING

G BEARING SURFACE ARMATURE EXT. AND BLOCKING LEVER EXT.

SAT FELT WASHERS BLOCKING LEVER

O PIVOT POINT (2) ARMATURE

TOP VIEW
LEFT SIDE

NOTE --- AVOID GETTING OIL OR GREASE ON MAGNET POLE FACE.

6.68 FORM FEED-OUT MECHANISM (LOCAL)

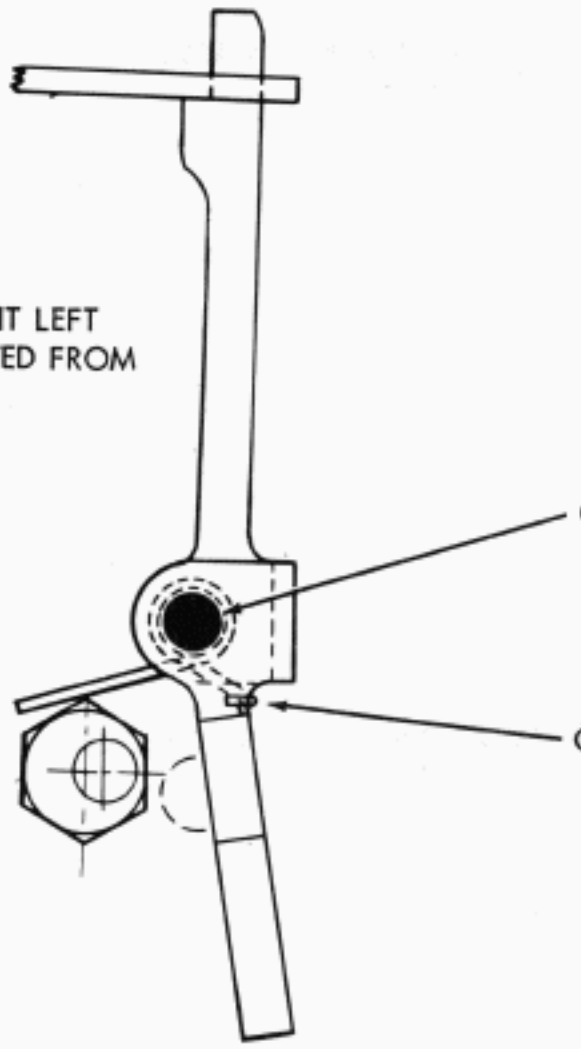

TYPING UNIT LEFT FRAME VIEWED FROM REAR RIGHT

O PIVOT FORM FEED-OUT BAIL

O LOOP TORSION SPRING

SEE PARAGRAPH 7.51

7. NEW DESIGN KEYBOARD

7.01 REST KEYBOARD BOTTOM SIDE UP

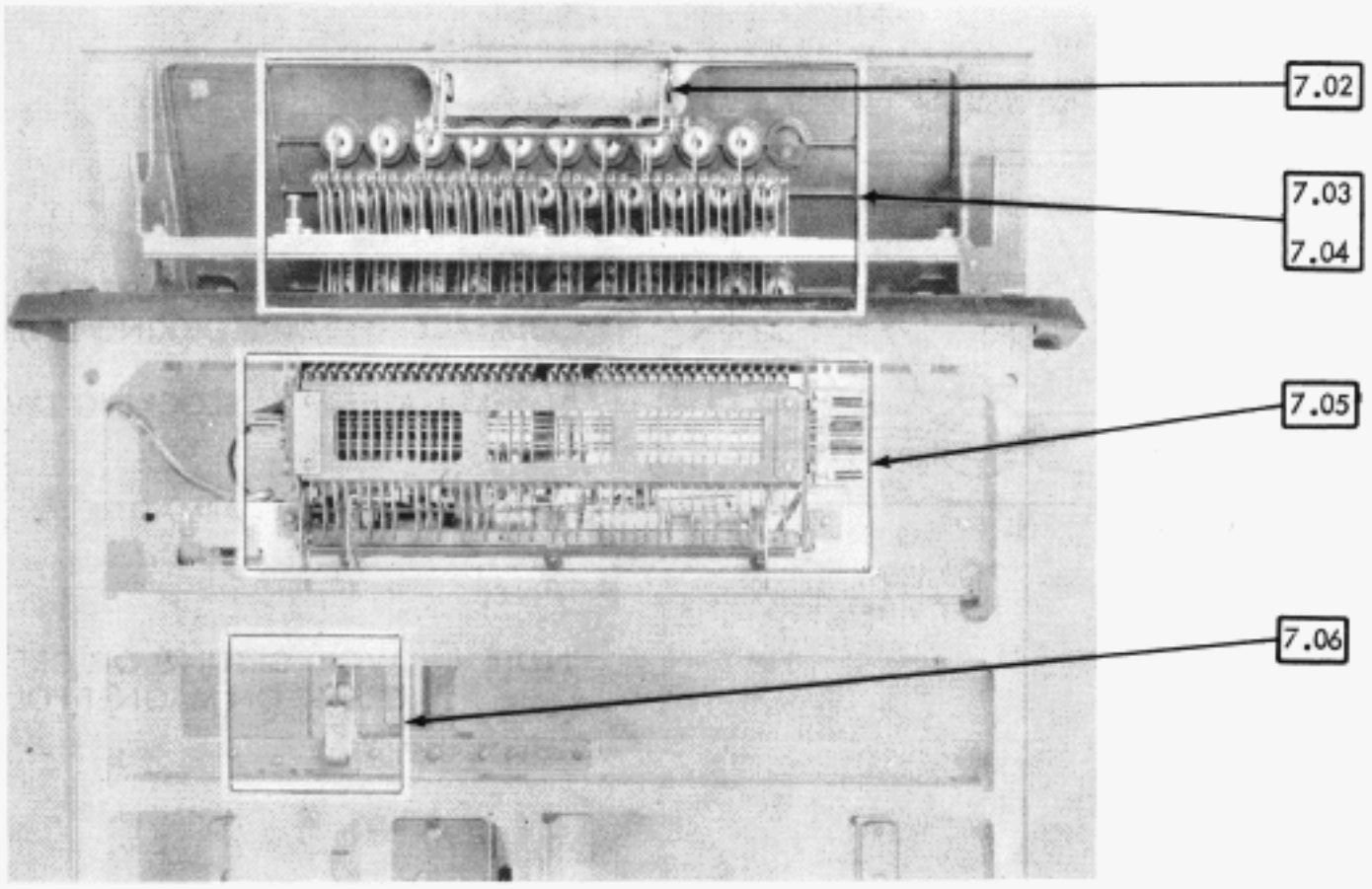

BOTTOM VIEW

7.02 SPACE BAR MECHANISM

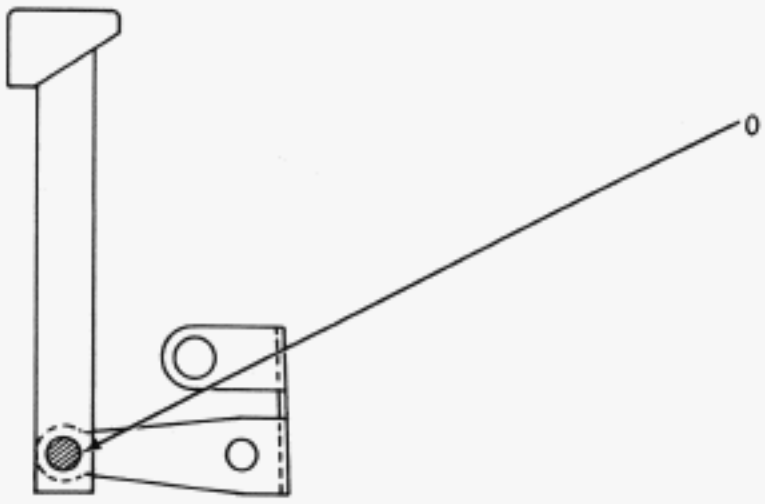

0 BEARING SURFACE (LEFT & RIGHT) — SPACE BAR

7.03 KEYLEVER MECHANISM

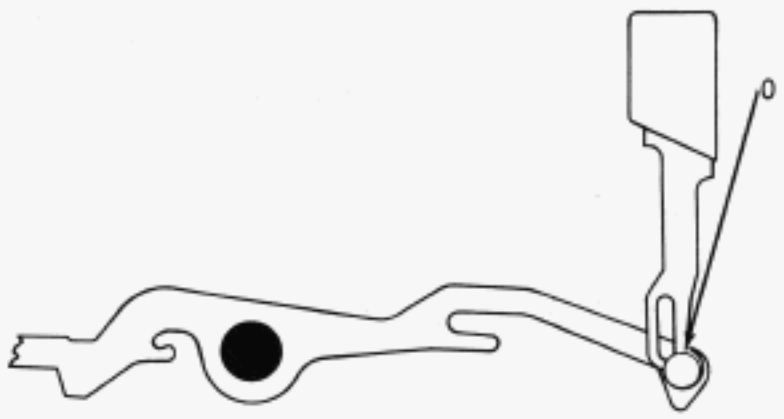

0 ENGAGING SURFACE (36 LEVERS) — KEYTOP LEVERS

7.04 BREAK LEVER MECHANISM

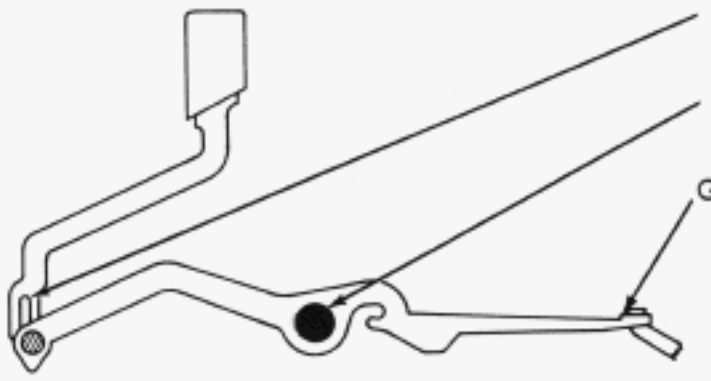

0	ENGAGING SURFACE	BREAK KEYLEVER
0	BEARING SURFACE	FUNCTION LEVER
G	CONTACT SURFACE	BREAK LEVER

7.05 CODE LEVER MECHANISM

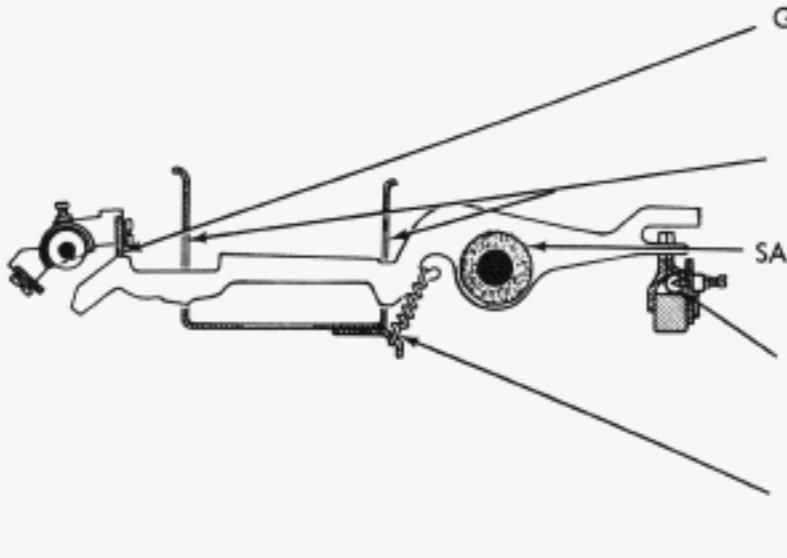

G	CONTACTING SURFACE (32 LEVERS)	CODE LEVER UNIVERSAL BAIL
0	GUIDE SLOTS (32 LEVERS)	CODE LEVERS
SAT	FELT WASHERS (6 WASHERS)	CODE LEVER SHAFT
0	BEARING SURFACE (32 WEDGES)	LOCK BALL TRACK
0	HOOKS-EACH END (40 SPRINGS)	SPRING

7.06 KEYBOARD LOCK MECHANISM

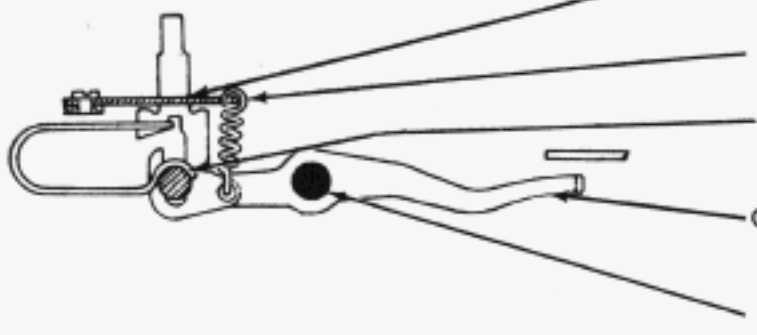

0	GUIDE SLOT	KEYBOARD LOCK PLUNGER
0	HOOKS-EACH END	SPRING
0	BEARING SURFACE	KEYBOARD LOCK LEVER
G	ENGAGING SURFACE	KEYBOARD LOCK FUNCTION LEVER
0	BEARING SURFACE	FUNCTION BAIL

7.07 REST KEYBOARD IN UPRIGHT POSITION

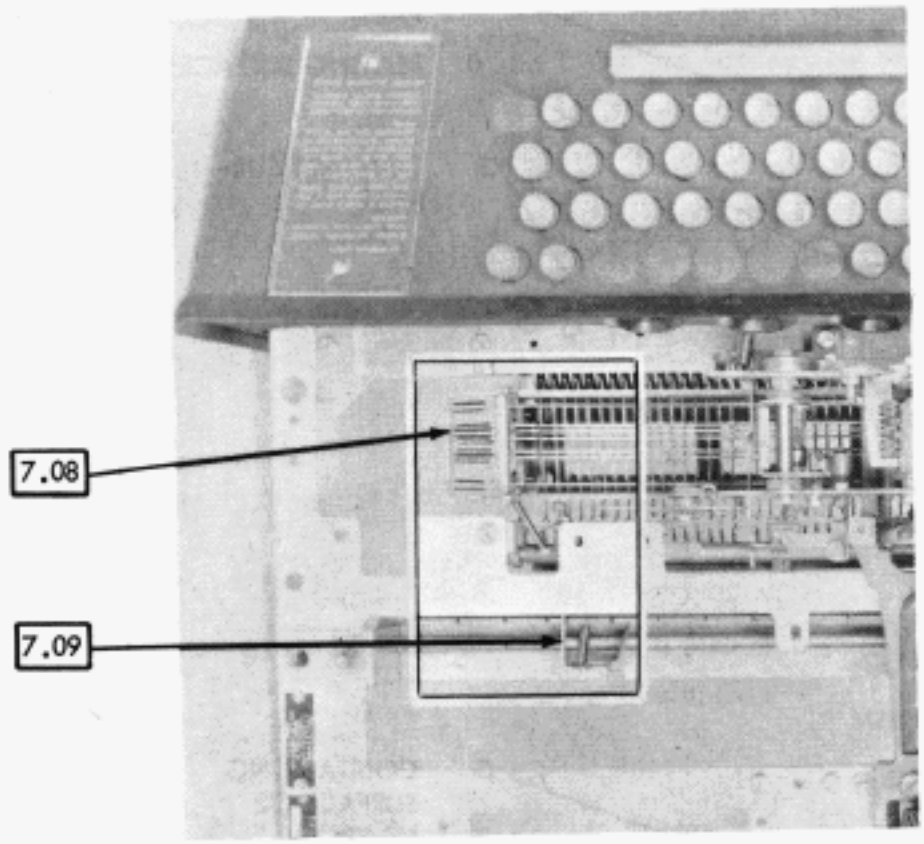

TOP VIEW

7.08 CODE BAR MECHANISM

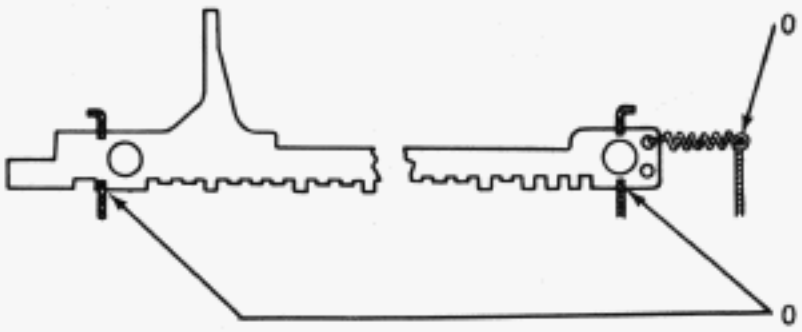

0	HOOKS–EACH END (7 SPRINGS)	SPRING
0	GUIDE SLOTS (LEFT AND RIGHT–TOP AND BOTTOM)	CODE BAR GUIDES

7.09 LOCAL CARRIAGE RETURN MECHANISM

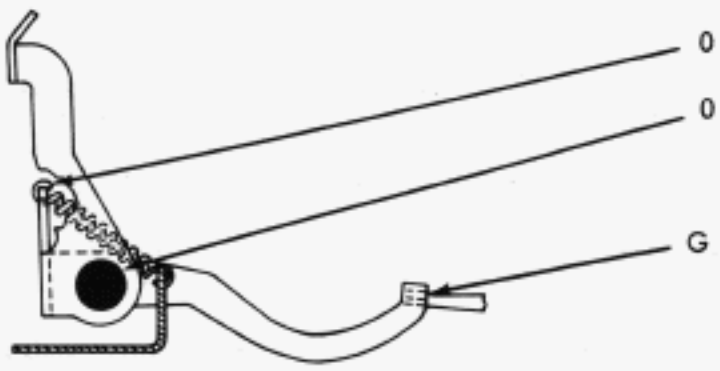

0	HOOKS–EACH END	SPRING
0	BEARING SURFACE (2 PLACES)	LOCAL CARRIAGE RETURN FUNCTION BAIL
G	ENGAGING SURFACE	LOCAL CARRIAGE RETURN FUNCTION LEVER

7.10 SIGNAL GENERATOR MECHANISM REST KEYBOARD IN UPRIGHT POSITION

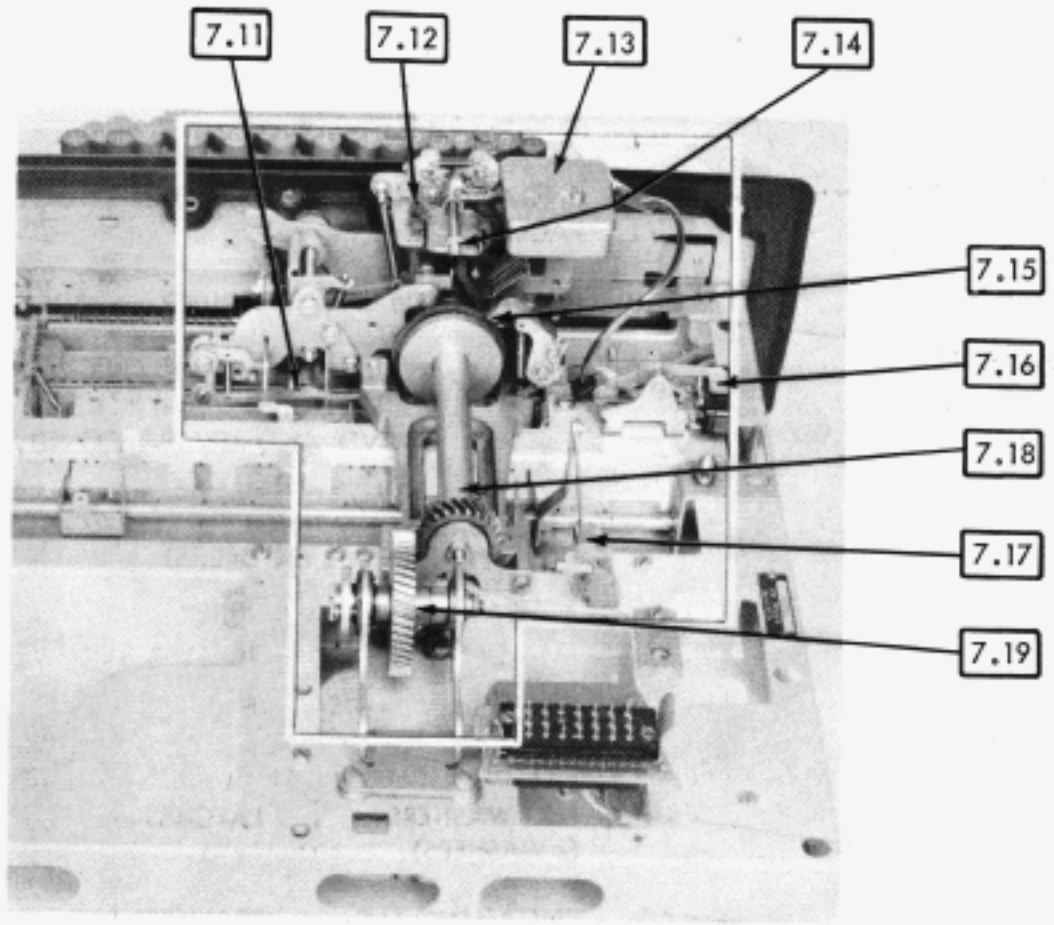

REAR VIEW

7.11 NON-REPEAT LEVER MECHANISM

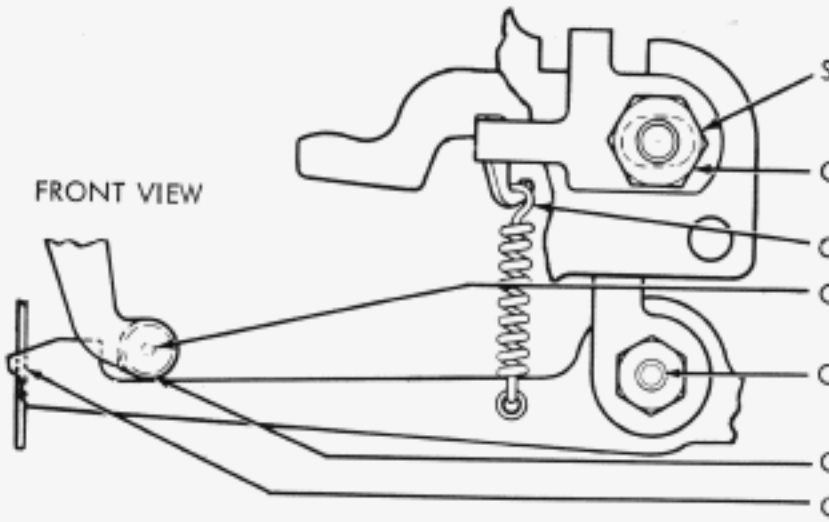

SAT	FELT WASHER (REAR VIEW)	NON-REPEAT LEVER CRANK
O2	BEARING SURFACE	NON-REPEAT LEVER CRANK
O	HOOKS - EACH END	SPRING
O	BEARING SURFACE	CODE BAR BAIL ROLLER
O2	BEARING SURFACE	NON-REPEAT LEVER
G	ENGAGING SURFACE	NON-REPEAT LEVER
C2	GUIDE SLOT	NON-REPEAT LEVER

7.12 TRANSFER LEVER MECHANISM

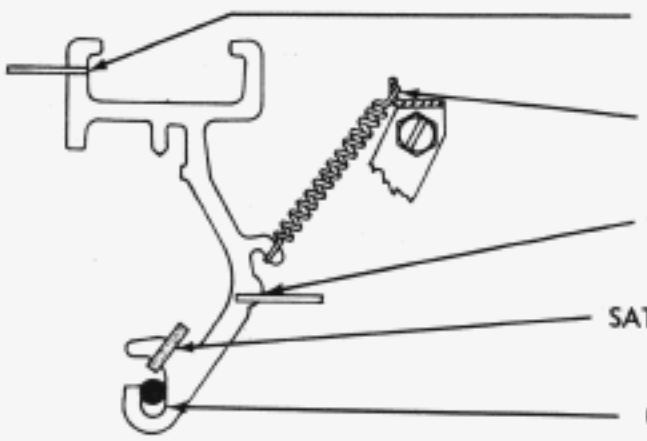

0	GUIDE SLOTS	TRANSFER LEVERS (7 LEVERS)
0	HOOKS-EACH END (7 SPRINGS)	SPRING
0	GUIDE SLOTS	TRANSFER LEVERS (7 LEVERS)
SAT	FELT WASHERS (4 WASHERS)	CAMMING SURFACES
0	GUIDE SLOTS	TRANSFER LEVERS (7 LEVERS)

7.13 CONTACT BOX

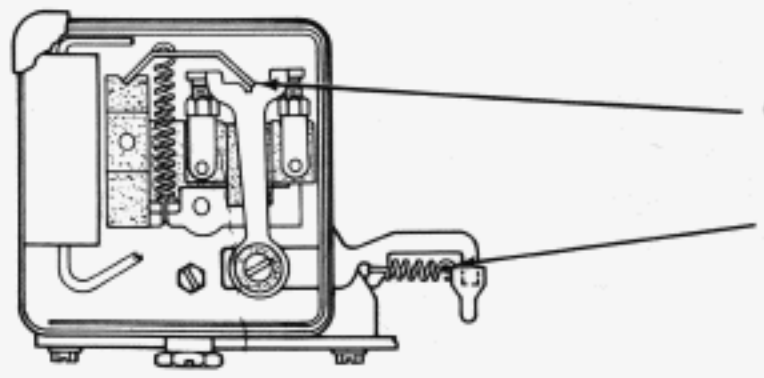

G	ENGAGING SURFACE	CONTACT TOGGLE
0	HOOKS-EACH END	SPRING

DISASSEMBLY: REMOVE NUT AND LOCK WASHER SECURING CONTACT BOX COVER AND REMOVE COVER.

CAUTION: GREASE SPARINGLY - KEEP CONTACTS FREE OF OIL OR GREASE.

7.14 TRANSFER BAIL MECHANISM

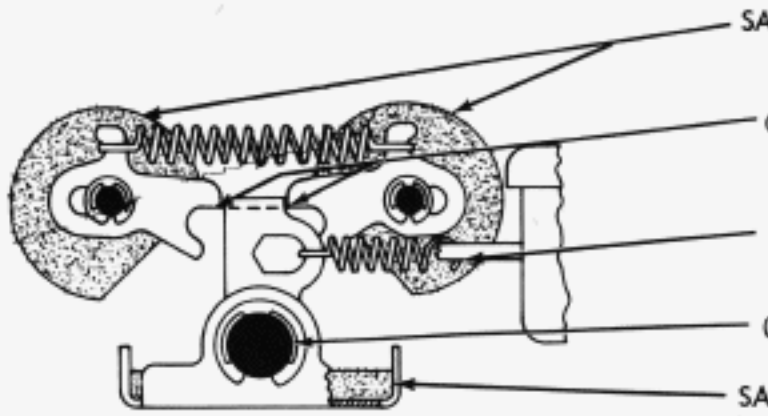

SAT	FELT WASHERS (2 WASHERS)	LATCHES
G	ENGAGING SURFACE	TRANSFER BAIL
0	HOOKS-EACH END (2 SPRINGS)	SPRING
02	BEARING SURFACE	TRANSFER BAIL
SAT	OIL WICK	TRANSFER BAIL

7.15 FUNCTION CLUTCH MECHANISM

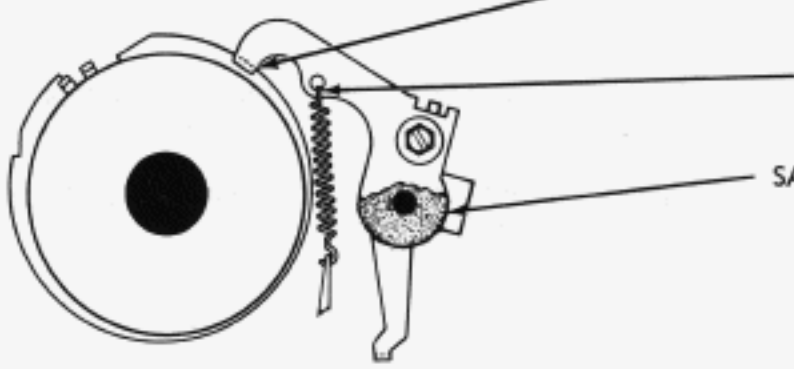

02	LATCHING SURFACE	CLUTCH STOP LEVER AND CLUTCH LATCH LEVER
0	HOOKS-EACH END (2 SPRINGS)	SPRING
SAT	FELT WASHERS (2 FRONT & REAR)	CLUTCH TRIP BAIL

7.16 MARGIN INDICATING MECHANISM

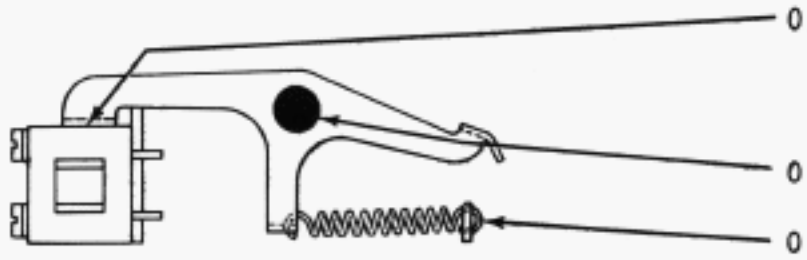

0	ENGAGING SURFACE (SEE NOTE)	MARGIN INDICATOR SWITCH
0	BEARING SURFACE	SWITCH LEVER
0	HOOKS-EACH END	SPRING

NOTE: ENGAGING SURFACE OF SWITCH AND LEVER SHALL NOT BE LUBRICATED IF SWITCH HAS A NYLON ACTUATOR.

7.17 LOCAL LINE FEED MECHANISM

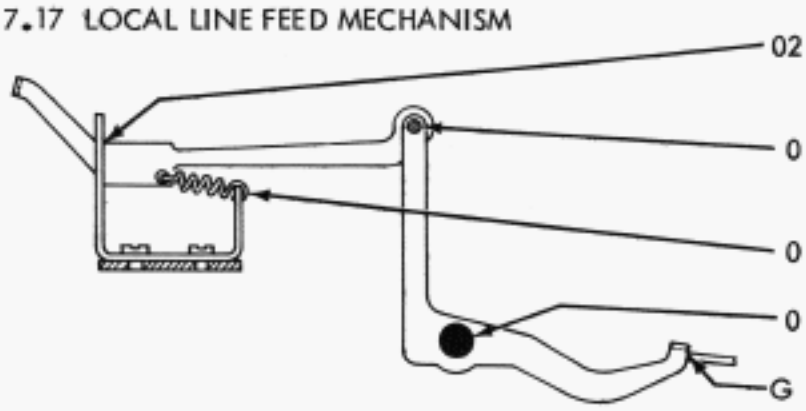

02	GUIDE SLOT	LOCAL LINE FEED TRIP LINK
0	BEARING SURFACE	LOCAL LINE FEED FUNCTION LEVER
0	HOOKS-EACH END	SPRING
0	BEARING SURFACE	FUNCTION BAIL
G	ENGAGING SURFACE	LOCAL LINE FEED FUNCTION LEVER

7.18 SHAFT MECHANISM

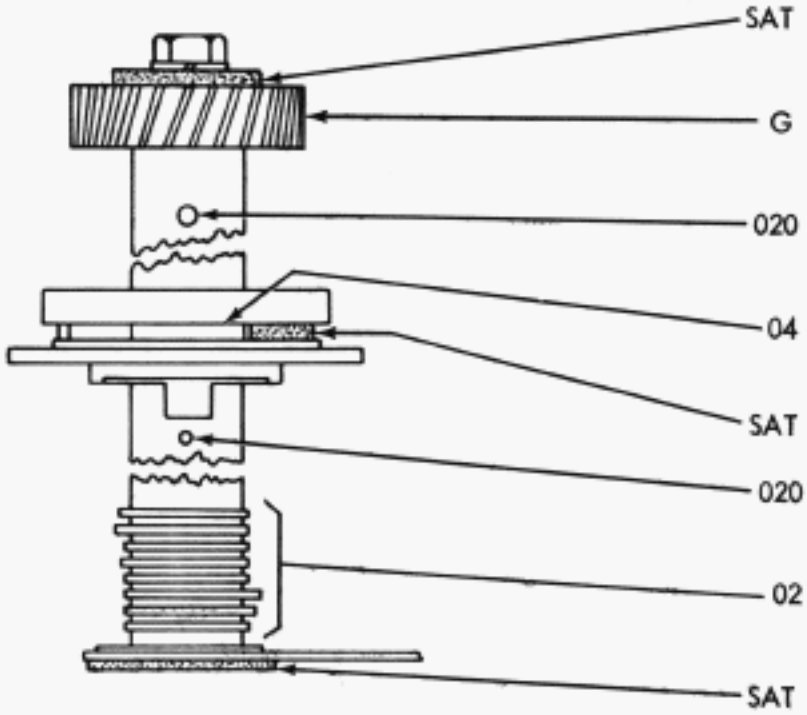

SAT	FELT WASHER	SIGNAL GENERATOR SHAFT
G	GEAR TEETH	SIGNAL GENERATOR SHAFT
020	OIL HOLE	SIGNAL GENERATOR SHAFT
04	INTERNAL MECHANISM	KEYBOARD CLUTCH
SAT	FELT WICK	
020	OIL HOLE	SIGNAL GENERATOR CAM
02	CAMMING SURFACE EACH CAM	SIGNAL GENERATOR CAM
SAT	FELT WASHER	SIGNAL GENERATOR SHAFT

7.19 INTERMEDIATE GEAR MECHANISM

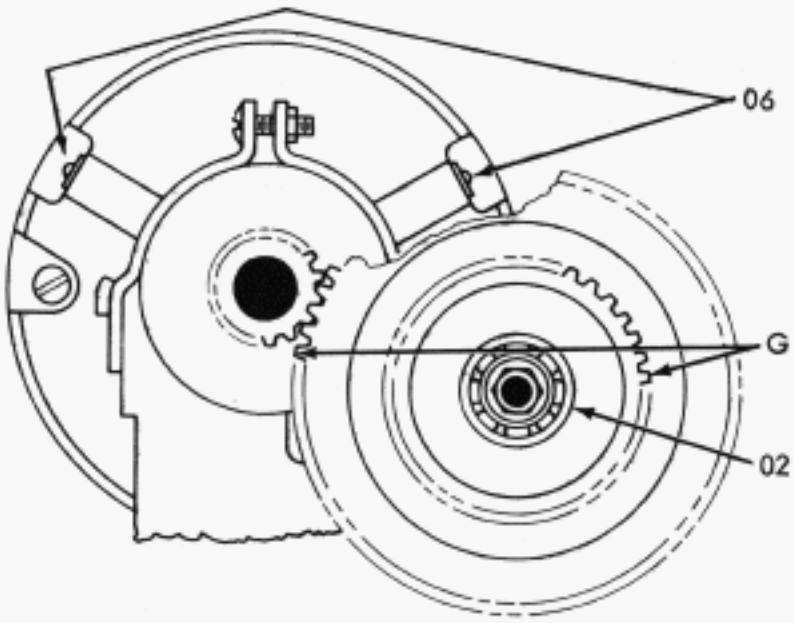

06	EACH OILER (TOTAL 4 OILERS)	MOTOR SHAFT
G	TEETH (2 GEARS)	INTERMEDIATE GEARS
02	BALL BEARING (2 BEARINGS)	INTERMEDIATE GEAR SHAFT

SEE PAGE 3-1 PARAGRAPH 1.02

7.20 SIGNAL GENERATOR MECHANISM (continued) REST KEYBOARD IN UPRIGHT POSITION

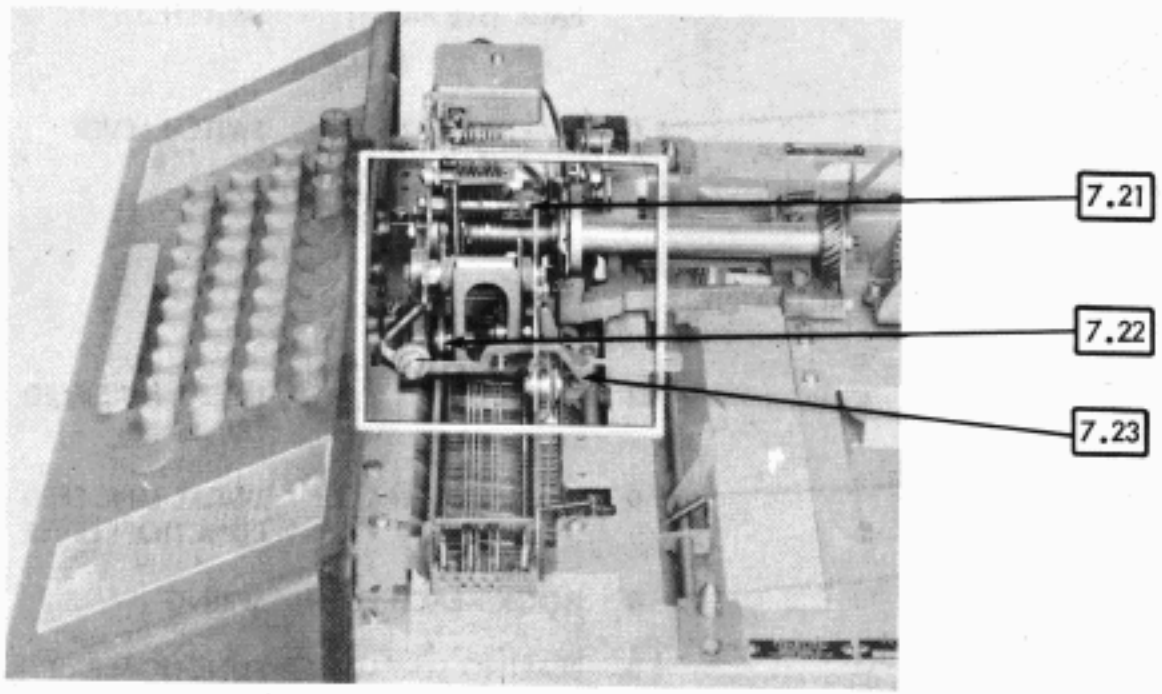

RIGHT SIDE VIEW

7.21 LOCKING BAIL MECHANISM

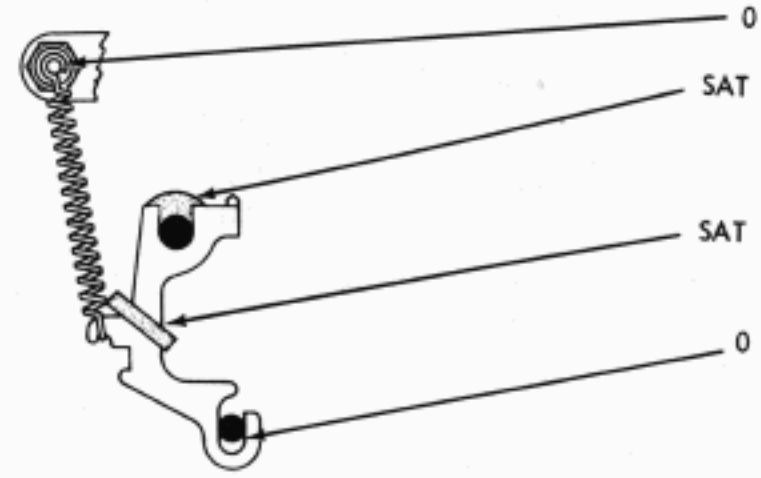

0	HOOKS–EACH END	SPRING
SAT	FELT WASHERS (2 WASHERS – FRONT AND REAR)	LOCKING BAIL POST
SAT	FELT WICK	CAMMING SURFACES
0	GUIDE SLOTS (3 SLOTS)	LOCKING BAIL

7.22 CODE BAR BAIL MECHANISM

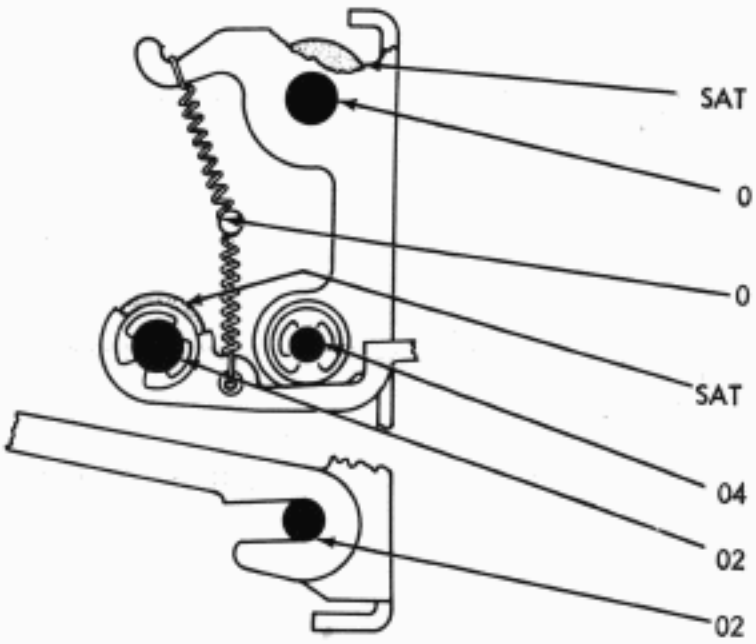

SAT	FELT WASHERS (TWO WASHERS)	CODE BAR BAIL
0	BEARING SURFACE (2 PLACES)	CODE BAR BAIL
0	HOOKS–EACH END (2 SPRINGS)	SPRING
SAT	FELT WASHER	CODE BAR BAIL LATCH
04	BEARING	CODE BAR BAIL
02	BEARING SURFACE	CODE BAR BAIL LATCH
02	ENGAGING SURFACE	ECCENTRIC FOLLOWER

7.16 MARGIN INDICATING MECHANISM

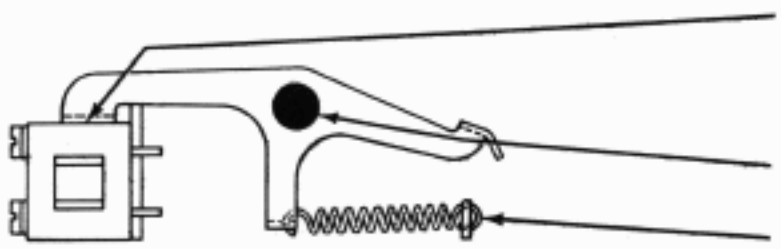

0	ENGAGING SURFACE (SEE NOTE)	MARGIN INDICATOR SWITCH
0	BEARING SURFACE	SWITCH LEVER
0	HOOKS-EACH END	SPRING

NOTE: ENGAGING SURFACE OF SWITCH AND LEVER SHALL NOT BE LUBRICATED IF SWITCH HAS A NYLON ACTUATOR.

7.17 LOCAL LINE FEED MECHANISM

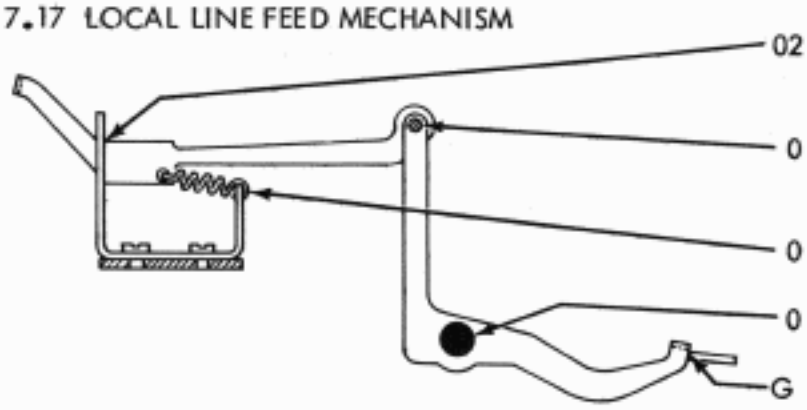

02	GUIDE SLOT	LOCAL LINE FEED TRIP LINK
0	BEARING SURFACE	LOCAL LINE FEED FUNCTION LEVER
0	HOOKS-EACH END	SPRING
0	BEARING SURFACE	FUNCTION BAIL
G	ENGAGING SURFACE	LOCAL LINE FEED FUNCTION LEVER

7.18 SHAFT MECHANISM

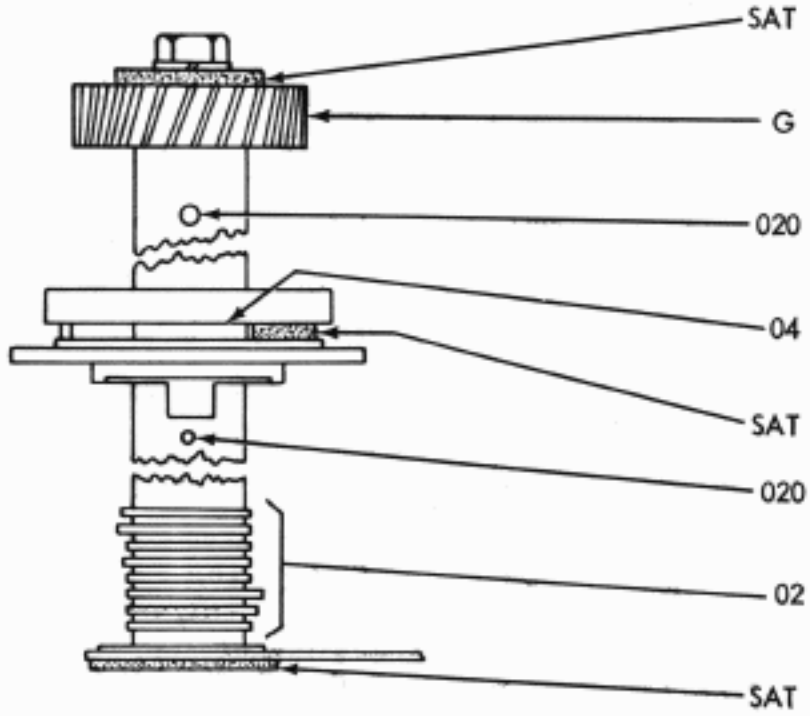

SAT	FELT WASHER	SIGNAL GENERATOR SHAFT
G	GEAR TEETH	SIGNAL GENERATOR SHAFT
020	OIL HOLE	SIGNAL GENERATOR SHAFT
04	INTERNAL MECHANISM	KEYBOARD CLUTCH
SAT	FELT WICK	
020	OIL HOLE	SIGNAL GENERATOR CAM
02	CAMMING SURFACE EACH CAM	SIGNAL GENERATOR CAM
SAT	FELT WASHER	SIGNAL GENERATOR SHAFT

7.19 INTERMEDIATE GEAR MECHANISM

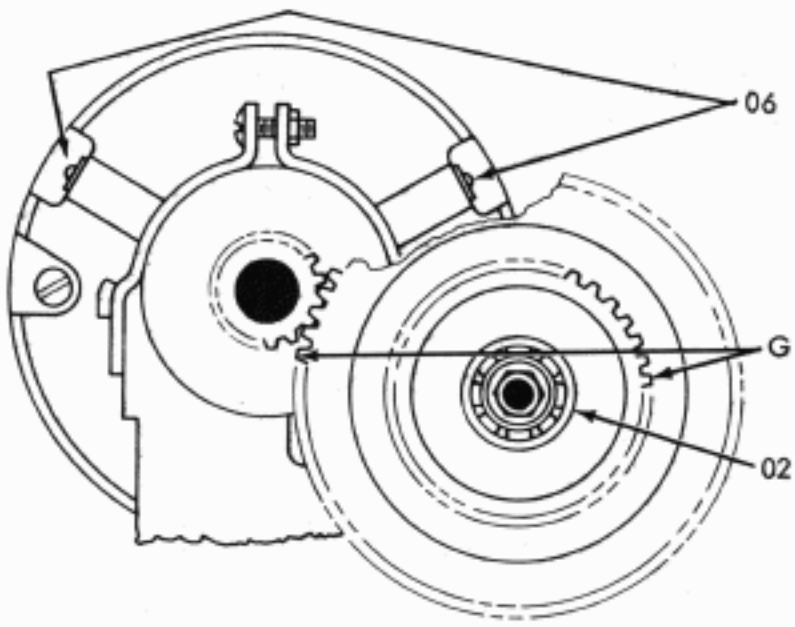

06	EACH OILER (TOTAL 4 OILERS)	MOTOR SHAFT
G	TEETH (2 GEARS)	INTERMEDIATE GEARS
02	BALL BEARING (2 BEARINGS)	INTERMEDIATE GEAR SHAFT

SEE PAGE 3-1 PARAGRAPH 1.02

7.20 SIGNAL GENERATOR MECHANISM (continued) REST KEYBOARD IN UPRIGHT POSITION

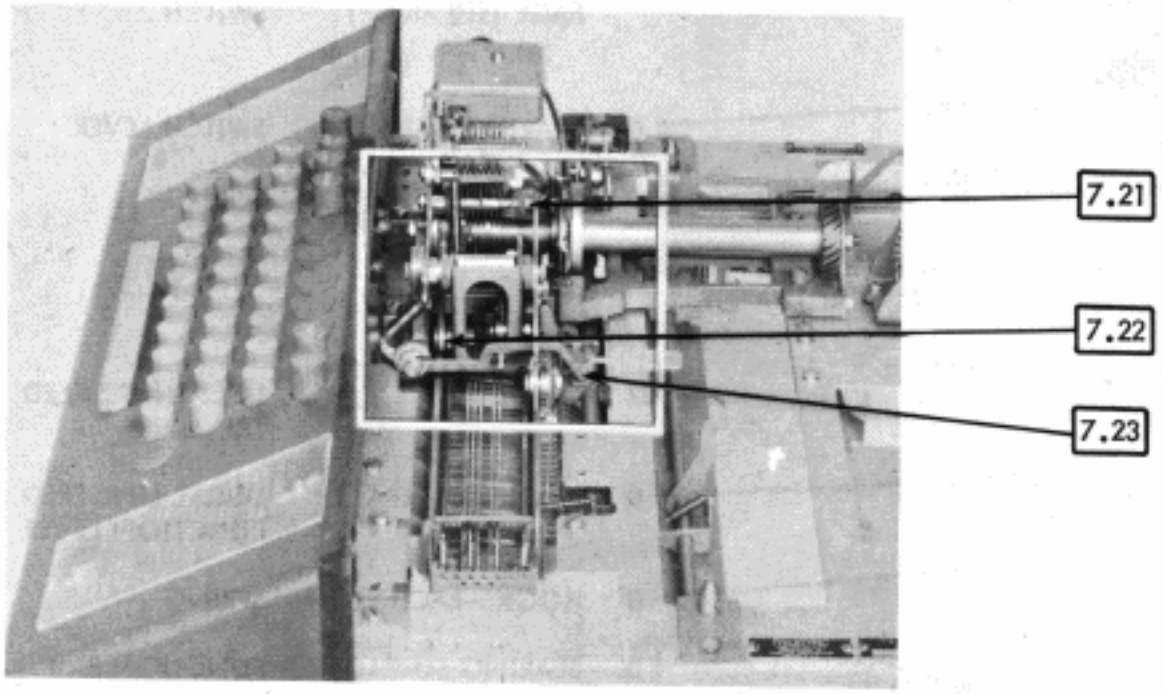

RIGHT SIDE VIEW

7.21 LOCKING BAIL MECHANISM

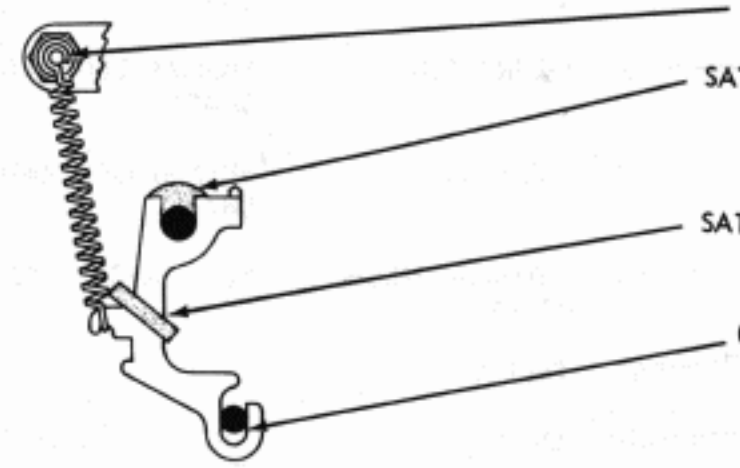

0	HOOKS-EACH END	SPRING
SAT	FELT WASHERS (2 WASHERS - FRONT AND REAR)	LOCKING BAIL POST
SAT	FELT WICK	CAMMING SURFACES
0	GUIDE SLOTS (3 SLOTS)	LOCKING BAIL

7.22 CODE BAR BAIL MECHANISM

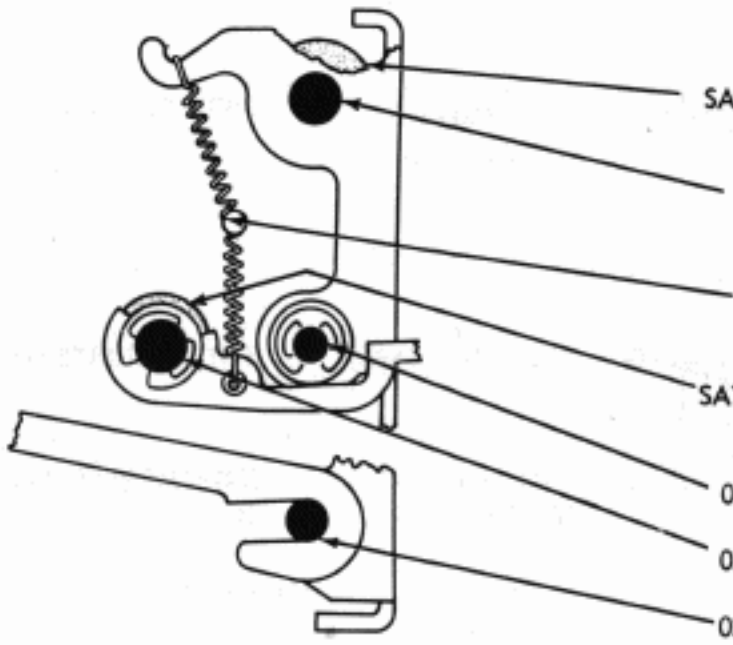

SAT	FELT WASHERS (TWO WASHERS)	CODE BAR BAIL
0	BEARING SURFACE (2 PLACES)	CODE BAR BAIL
0	HOOKS-EACH END (2 SPRINGS)	SPRING
SAT	FELT WASHER	CODE BAR BAIL LATCH
04	BEARING	CODE BAR BAIL
02	BEARING SURFACE	CODE BAR BAIL LATCH
02	ENGAGING SURFACE	ECCENTRIC FOLLOWER

7.23 UNIVERSAL BAIL LATCH LEVER

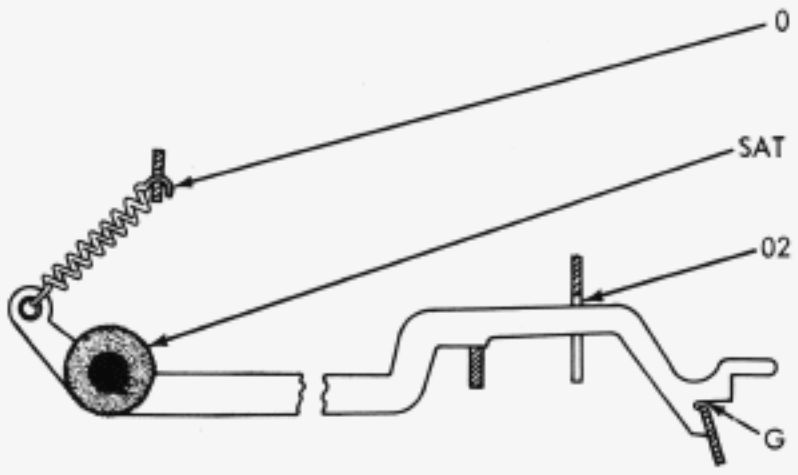

0	HOOKS (EACH END)	SPRING
SAT	FELT WASHER	UNIVERSAL BAIL LATCH LEVER
02	GUIDE SLOT (EACH SIDE OF SLOT)	UNIVERSAL BAIL LATCH LEVER
G	ENGAGING SURFACE	RESET BAIL LATCH

7.24 NEW DESIGN KEYBOARD AND VARIABLE FEATURES
REST KEYBOARD IN UPRIGHT POSITION

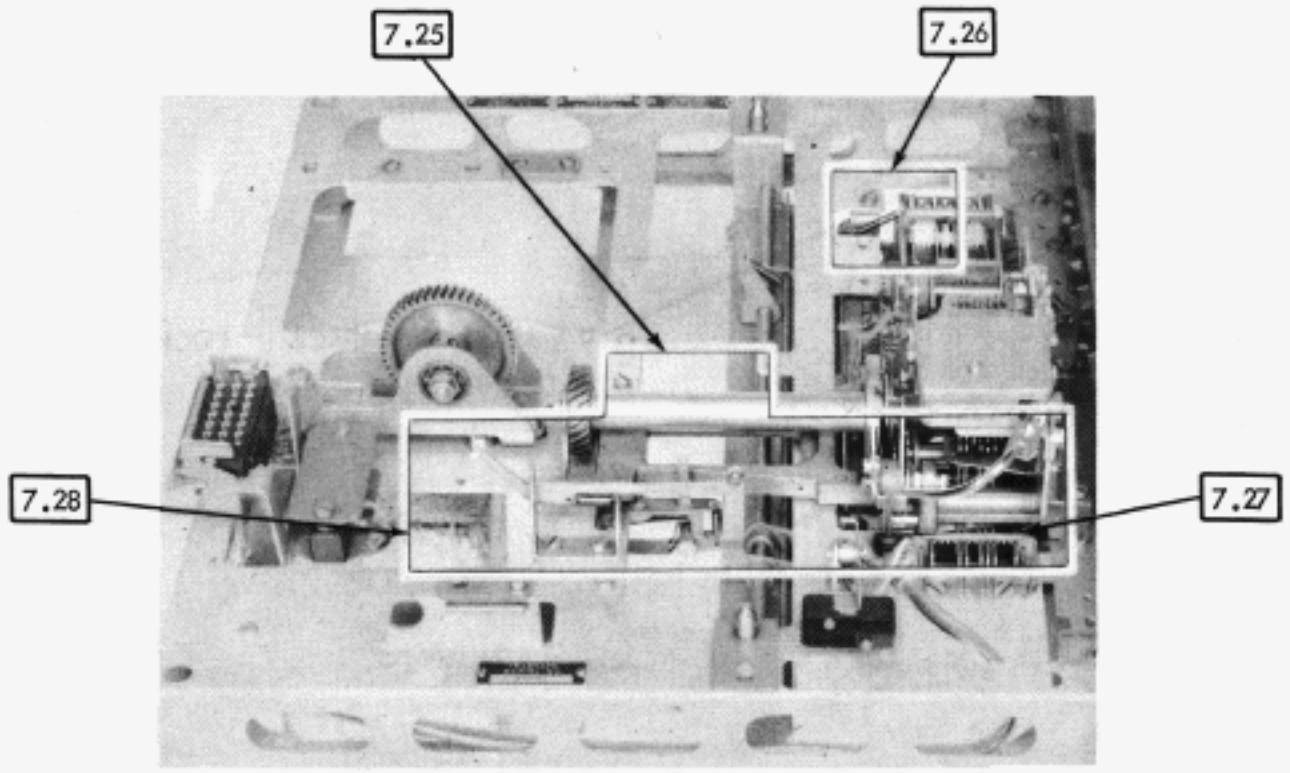

LEFT SIDE VIEW

7.25 ELECTRICAL LINE BREAK MECHANISM

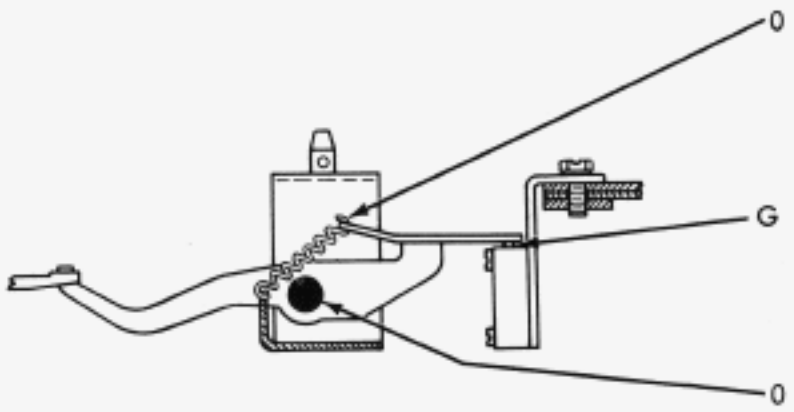

0	HOOKS-EACH END	SPRING
G	CONTACT SURFACE	SENSITIVE SWITCH
0	BEARING SURFACE	BREAK LEVER

7.26 CODE LEVER UNIVERSAL BAIL MECHANISM

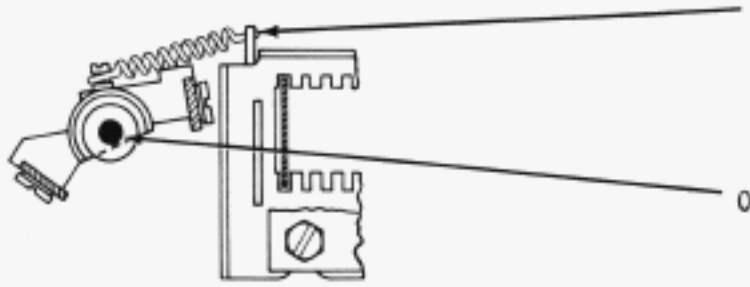

0	HOOKS-EACH END	SPRING
02	BEARING SURFACE	CODE LEVER UNIVERSAL BAIL

7.27 LOCK BAR LATCH MECHANISM

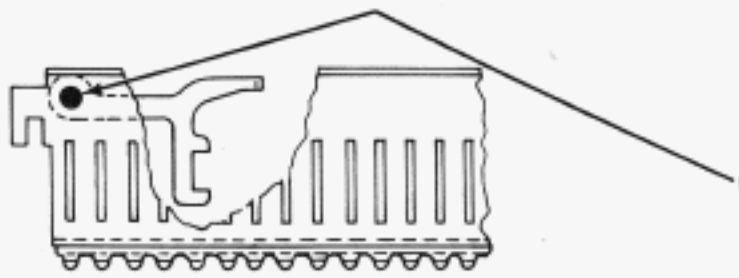

0	BEARING SURFACE	LOCK BAR LATCH

7.28 LOCAL PAPER FEED-OUT MECHANISM

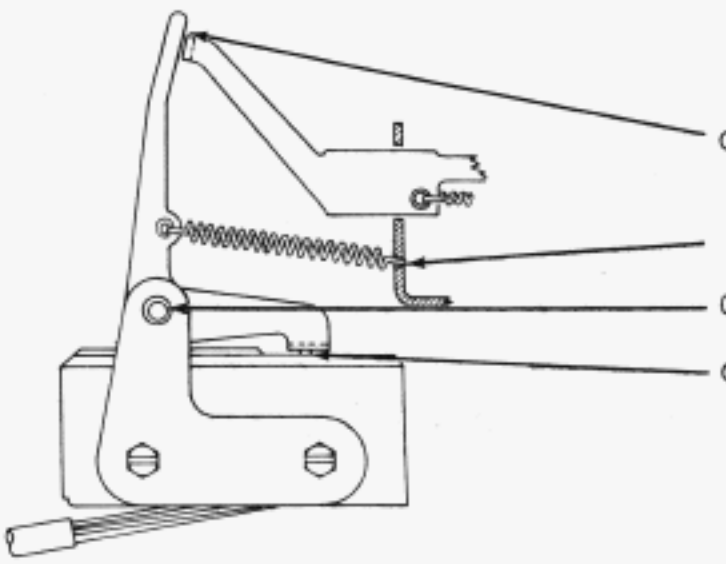

G	ENGAGING SURFACE	LOCAL LINE FEED TRIP LINK
0	HOOKS-EACH END	SPRING
02	BEARING SURFACE	LEVER
G	ENGAGING SURFACE	MAGNETIC BLOWOUT SWITCH

7.29 KEYBOARD IN UPRIGHT POSITION
ANSWER-BACK MECHANISM (DIAL TWX) KEYBOARDS LK6 AND UP (BELL 28D AND UP)

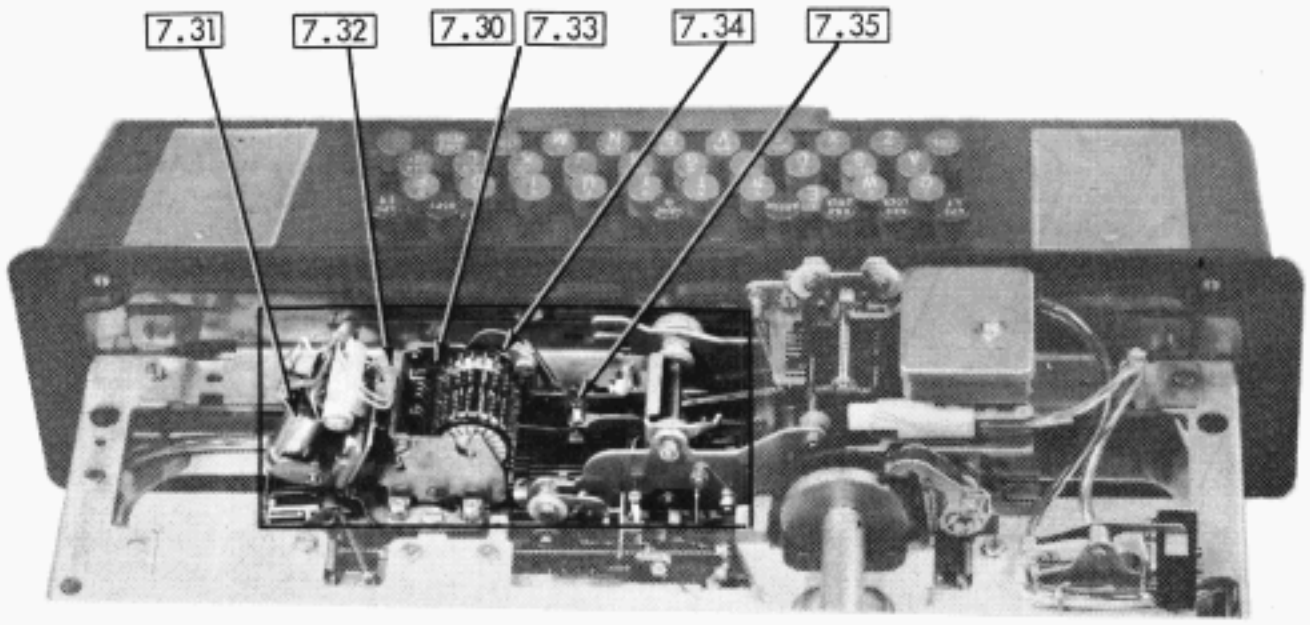

REAR VIEW

7.30 ANSWER BACK - SENSING LEVER MECHANISM

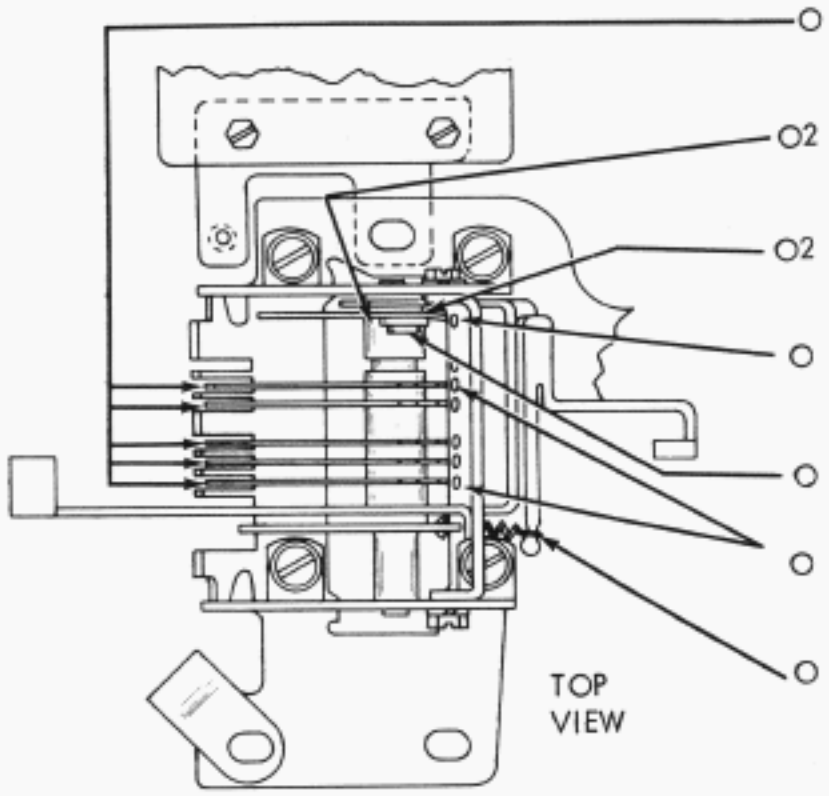

O	CAMMING SURFACES (5 PLACES)	SENSING LEVERS
O2	BEARING SURFACE	DETENT LEVER
O2	BEARING SURFACE	DETENT LEVER AND ROLLER
O	HOOK - EACH END	SPRING
O	BEARING SURFACE	DETENT LEVER ROLLER
O	HOOKS - EACH END (5 SPRINGS)	SPRINGS
O	HOOK - EACH END	SPRING

7.31 ANSWER BACK - ARMATURE MECHANISM

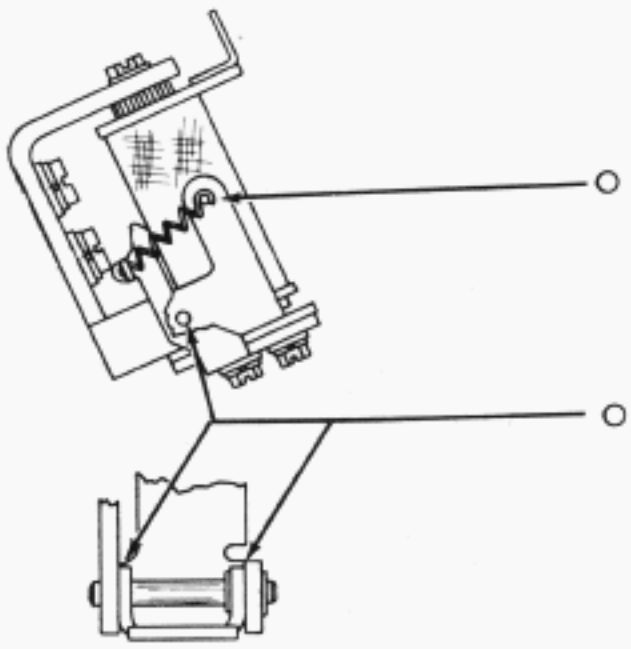

O	HOOK - EACH END	SPRING
O	BEARING SURFACES (2 PLACES)	ARMATURE AND SHAFT

7.32 ANSWER-BACK - STOP LEVER
KEYBOARDS LK6 AND UP (BELL 28D AND UP)

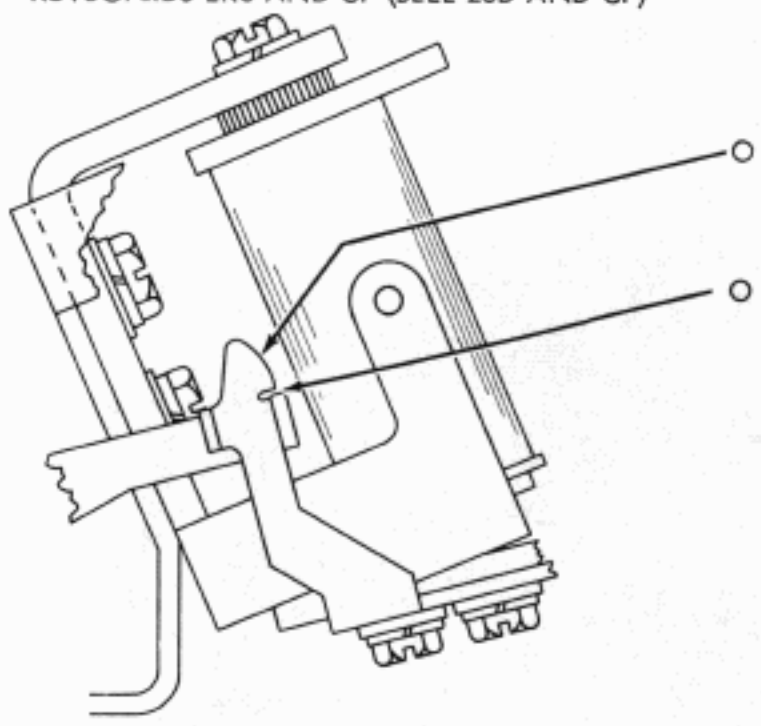

O	CONTACTING SURFACE	LATCH AND STOP LEVER
O	LATCHING SURFACE	LATCH AND STOP LEVER

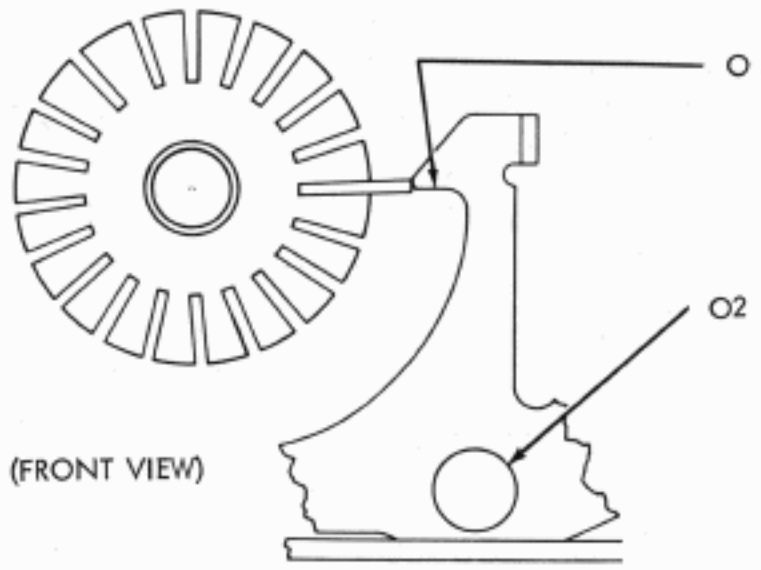

(FRONT VIEW)

O	CAMMING SURFACE	STOP LEVER
O2	BEARING SURFACE (2 PLACES)	STOP LEVER AND LEVER PIVOT

7.33 ANSWER BACK - CODE BARS AND SENSING LEVERS

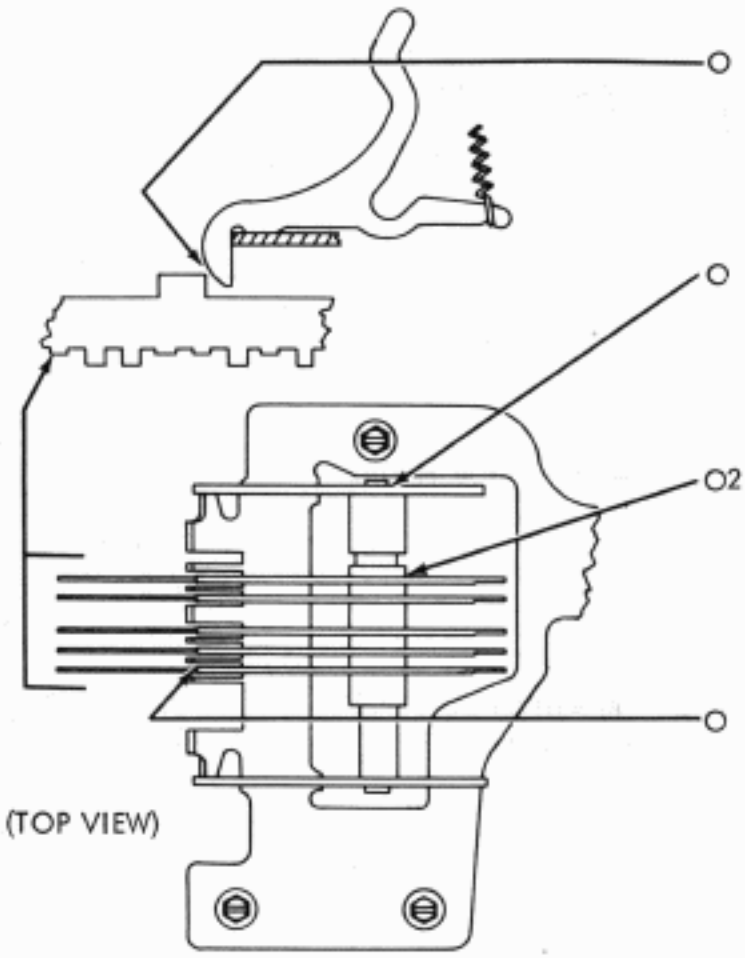

(TOP VIEW)

O	ENGAGING SURFACES (5 PLACES)	SENSING LEVERS AND CODE BARS
O	BEARING SURFACE (BOTH SIDES)	LEVERS PIVOT AND SIDE PLATE
O2	BEARING SURFACES (5 LEVERS)	SENSING LEVERS AND LEVERS PIVOT
O	GUIDING SURFACES (5 PLACES)	SENSING LEVERS AND MOUNTING PLATE

7.34 ANSWER BACK - DRIVING MECHANISM
KEYBOARDS LK6 AND UP (BELL 28D AND UP)

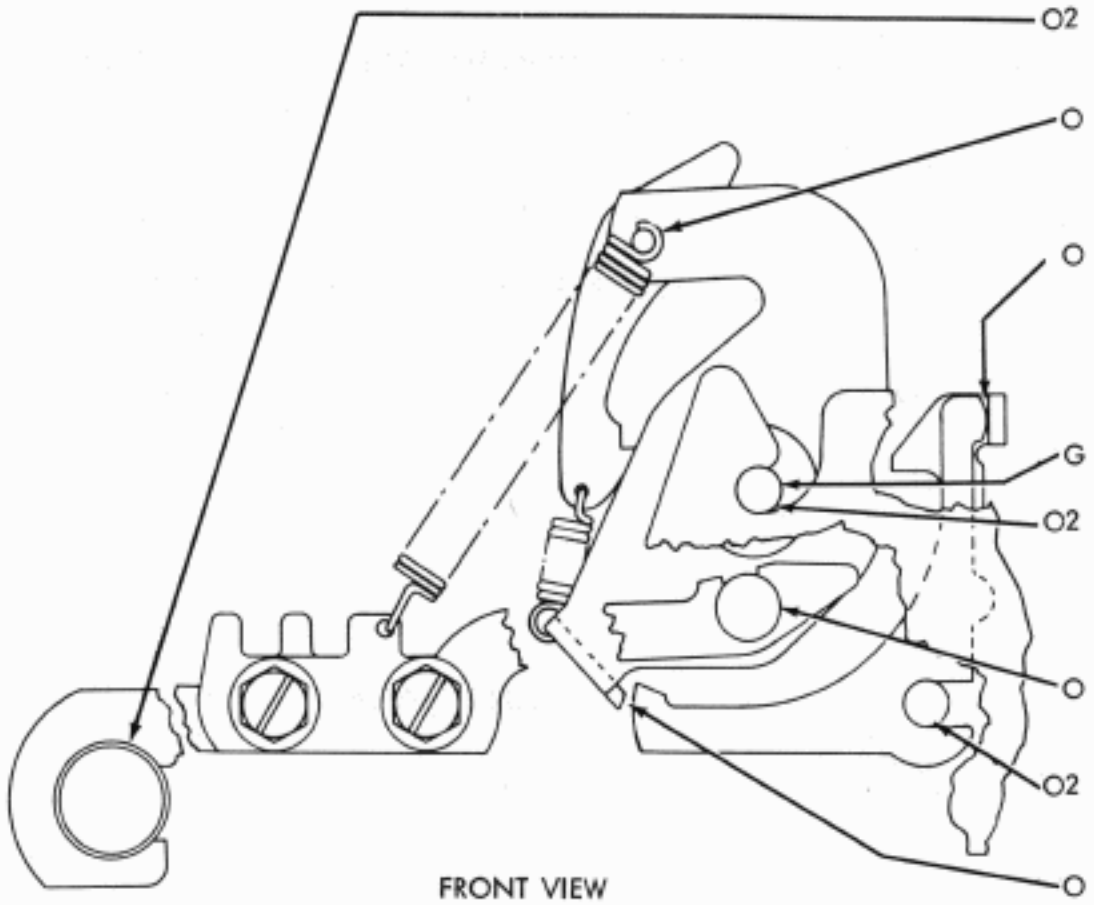

FRONT VIEW

O2	BEARING SURFACE	ECCENTRIC STUD AND DRIVE LINK
O	HOOK - EACH END	SPRING
O	ENGAGING SURFACE	BLOCKING LEVER AND STOP LEVER
G	SHAFT	DRIVE PLATE
O2	BEARING SURFACE (2 PLATES)	DRIVE PLATE SHAFT AND SIDE PLATE
O	ENGAGING SURFACE	DRIVE LINK AND STUD
O2	BEARING SURFACE	BLOCKING LEVER AND LEVER PIVOT
O	ENGAGING SURFACE	BLOCKING LEVER AND EXTENSION

7.35 ANSWER BACK - STEPPING PAWL

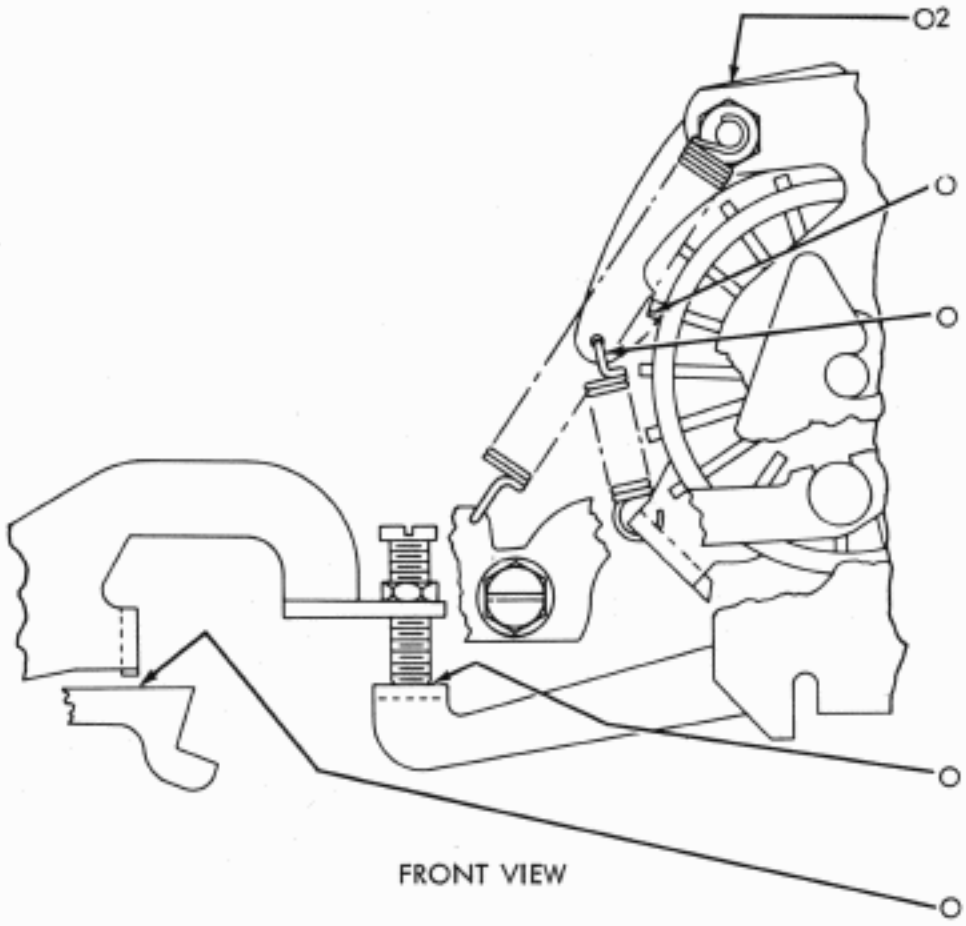

FRONT VIEW

O2	BEARING SURFACE	STEPPING PAWL AND ECCENTRIC STUD
O	CONTACTING SURFACES	STEPPING PAWL AND CODE BLADES
O	HOOK - EACH END	SPRING
O	CONTACTING SURFACE	ADJUSTING SCREW
O	CONTACTING SURFACE	LEVER AND LATCH

7.36 ANSWER-BACK, KEYBOARD LOCK BAIL MECHANISM KEYBOARD LK6 AND UP ("FIGS" "D")

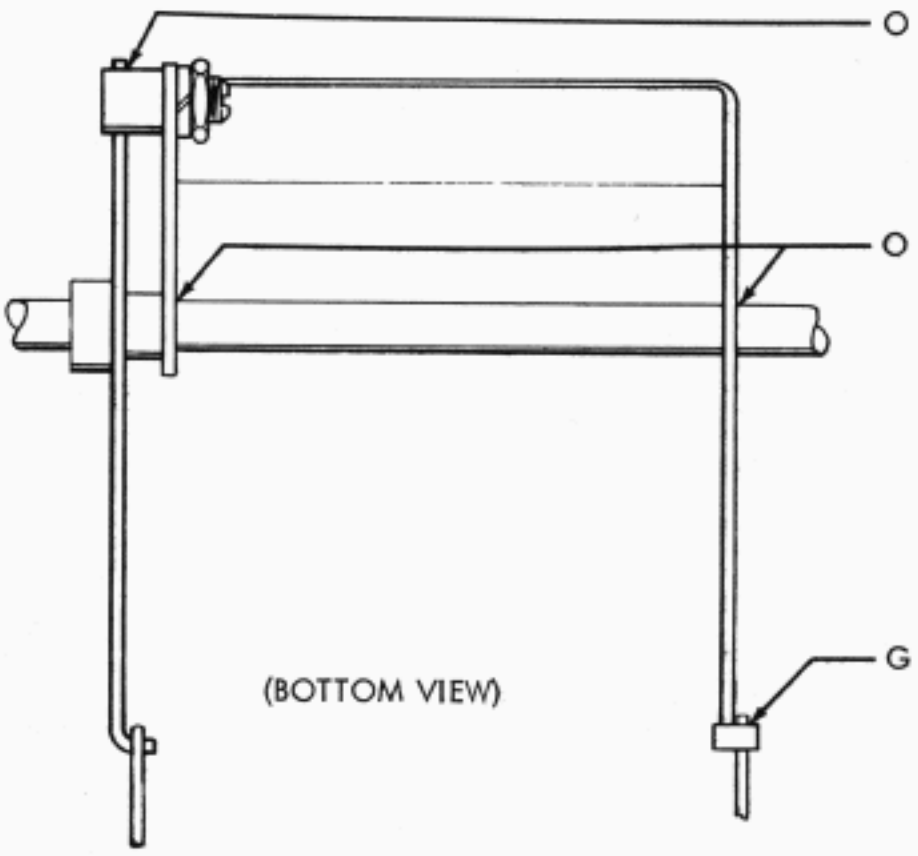

O	ENGAGING SURFACES	ECCENTRIC AND LOCK LEVER
O	BEARING SURFACES	FUNCTION LEVER AND BAIL
G	CONTACTING SURFACE	"HERE IS" LEVER AND BAIL

7.37 ANSWER-BACK MECHANISM (DIAL TWX) FOR KEYBOARDS LK3, LK4 AND LK5 (BELL 28A AND 28C)

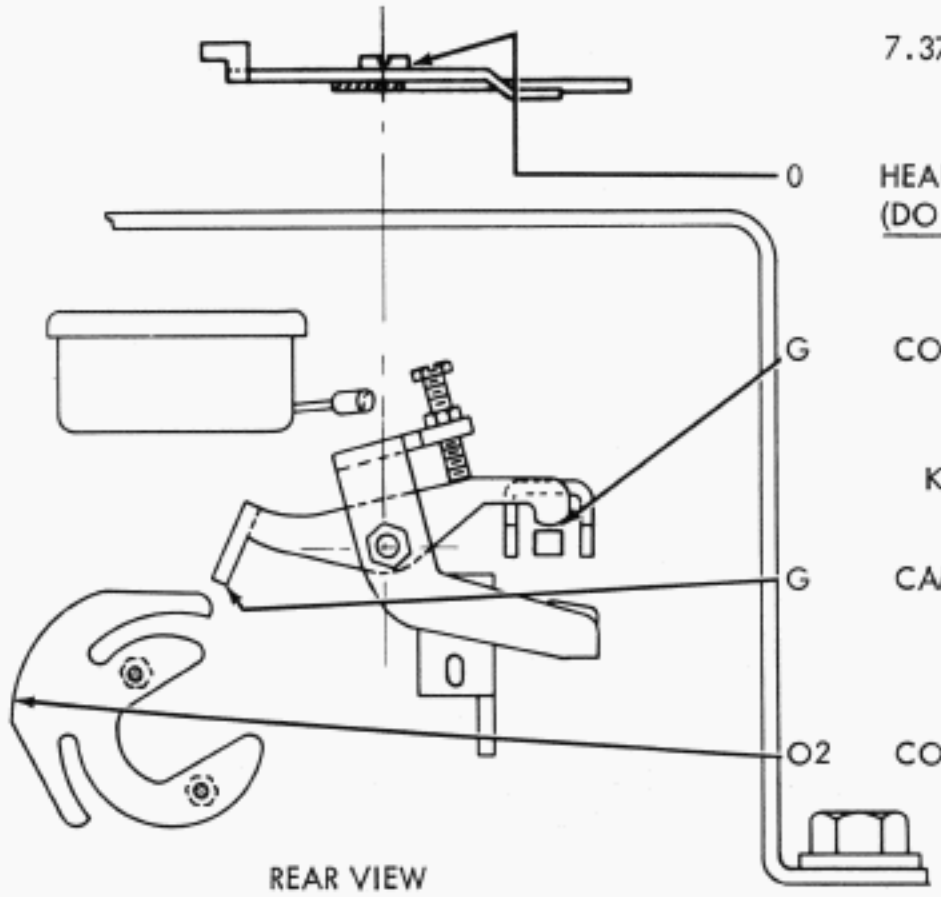

REAR VIEW

7.37A PULSING CONTACTS

O	HEAD OF SHOULDER SCREW (DO NOT OVER LUBRICATE)	FINGER PIVOT
G	CONTACTING SURFACE	FINGER AND SWINGER
	NOTE KEEP OIL AND GREASE OFF OF CONTACTS	
G	CAMMING SURFACE	FINGER EXTENSION
O2	CONTACTING SURFACE	CAM

7.38 ANSWER-BACK DRIVE MECHANISM

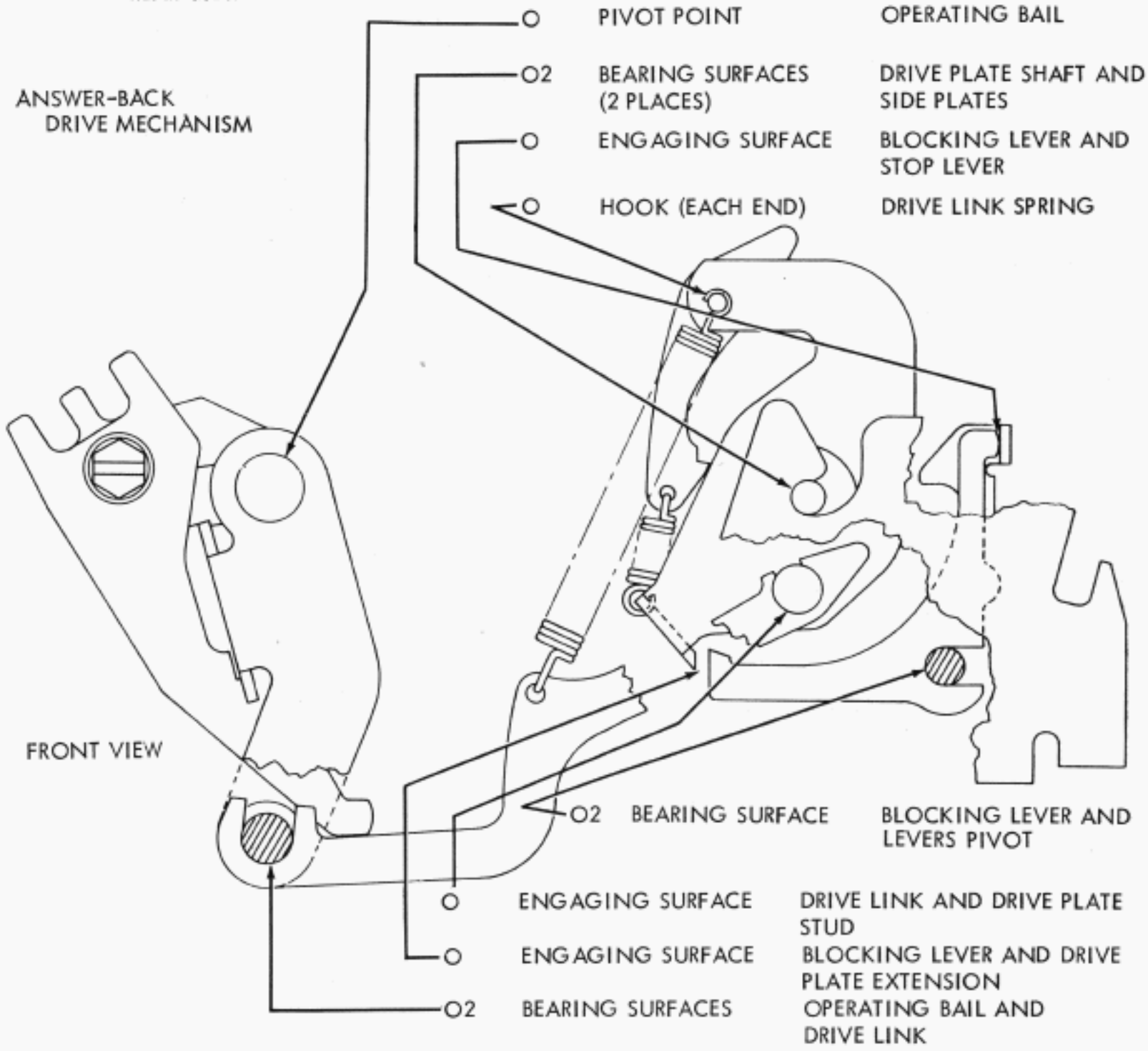

FRONT VIEW

O	PIVOT POINT	OPERATING BAIL
O2	BEARING SURFACES (2 PLACES)	DRIVE PLATE SHAFT AND SIDE PLATES
O	ENGAGING SURFACE	BLOCKING LEVER AND STOP LEVER
O	HOOK (EACH END)	DRIVE LINK SPRING
O2	BEARING SURFACE	BLOCKING LEVER AND LEVERS PIVOT
O	ENGAGING SURFACE	DRIVE LINK AND DRIVE PLATE STUD
O	ENGAGING SURFACE	BLOCKING LEVER AND DRIVE PLATE EXTENSION
O2	BEARING SURFACES	OPERATING BAIL AND DRIVE LINK

7.39 ANSWER-BACK MECHANISM (DIAL TWX) FOR KEYBOARDS LK3, LK4 AND LK5 (BELL 28A AND 28C)
DRIVE MECHANISM CONT'D

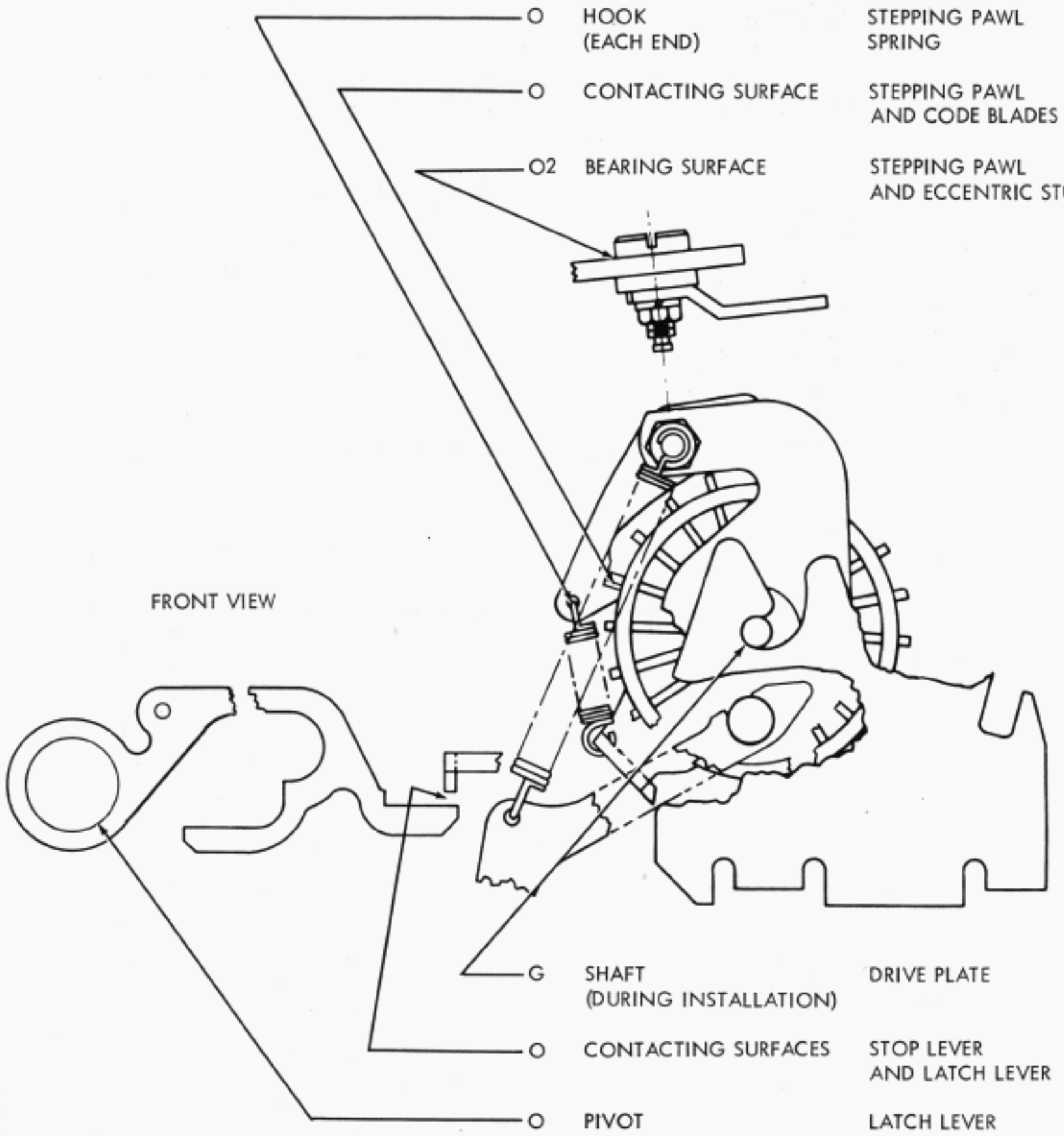

LUBRICATE SENSING LEVER AND CODE BAR MECHANISMS PER PARAGRAPHS 7.30, 7.31, 7.32 AND 7.33

7.40 VARIABLE SPEED DRIVE MECHANISM

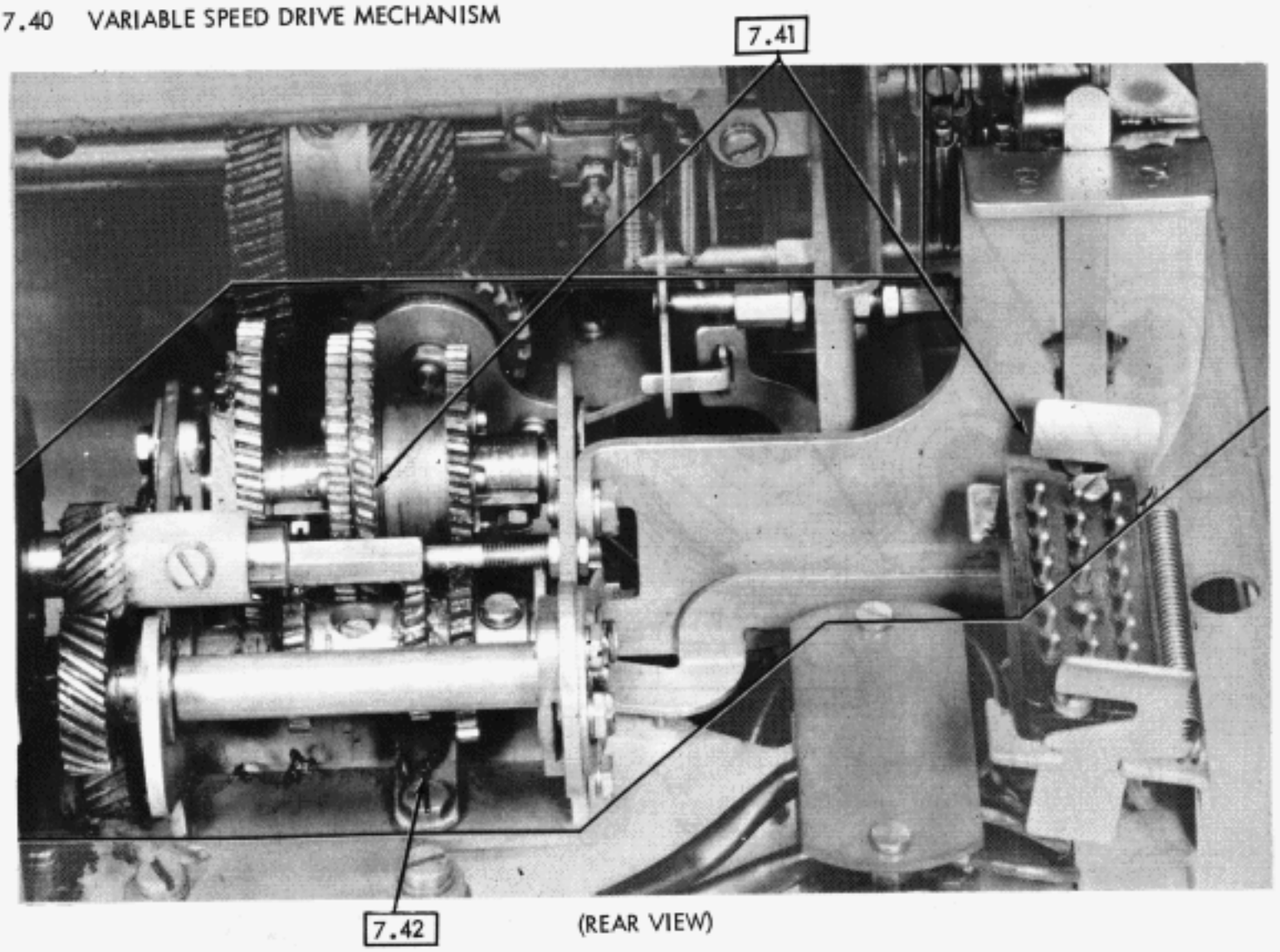

(REAR VIEW)

7.41 VARIABLE SPEED DRIVE – SPEED SELECTOR MECHANISM

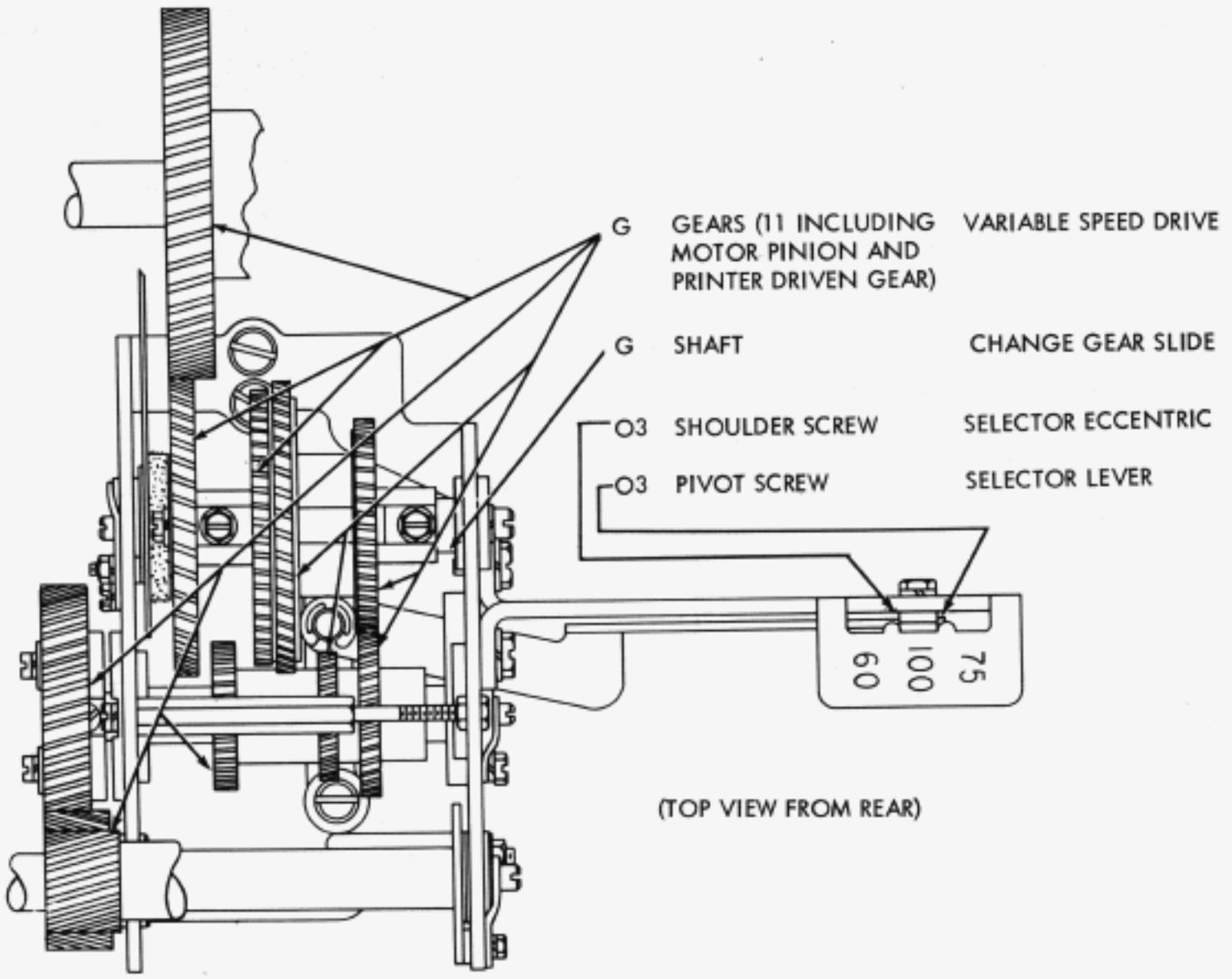

(TOP VIEW FROM REAR)

7.42 VARIABLE SPEED DRIVE - SPEED SELECTING MECHANISM

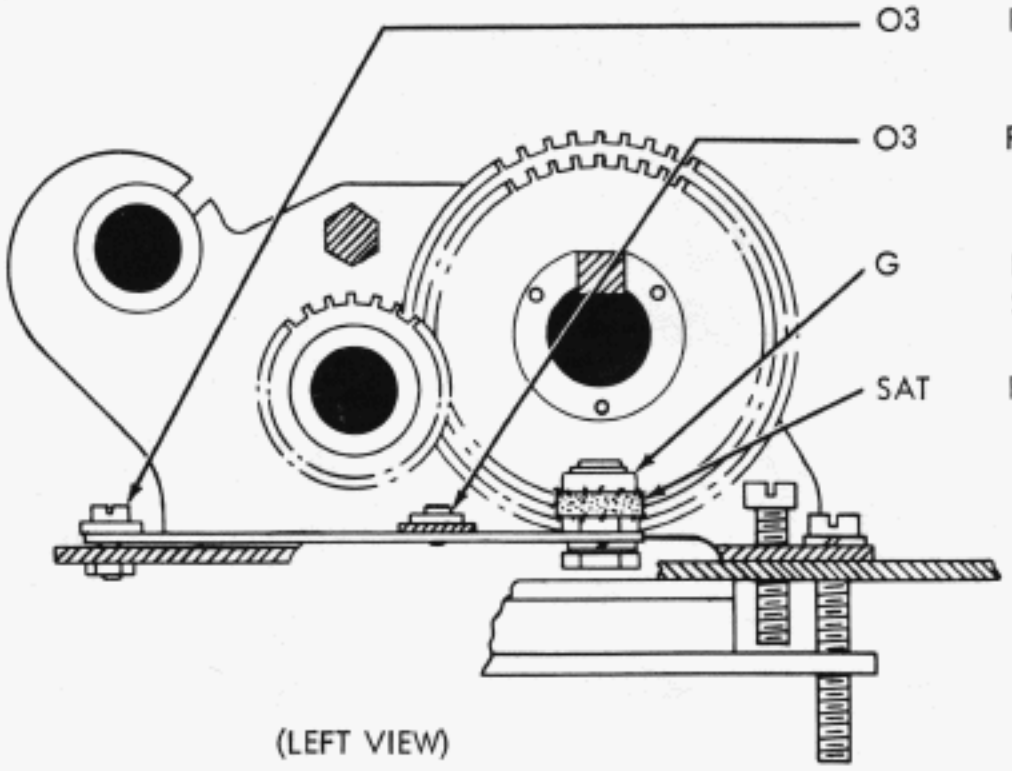

O3	PIVOT POST	SELECTING LEVER
O3	PIVOT POST	SELECTOR LINK
G	ROLLER AND SIDES OF GEARS	SELECTING LEVER
SAT	FELT WASHER	ROLLER

(LEFT VIEW)

7.43 BLINDING CONTACT MECHANISM

7.44

7.44 CAM FOLLOWER MECHANISM

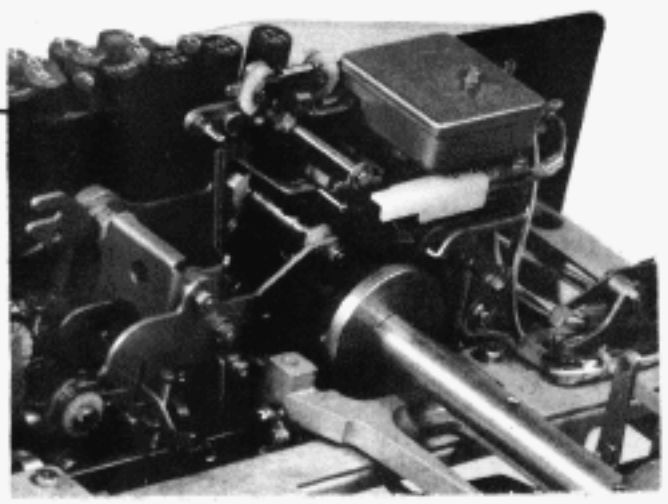

REAR VIEW

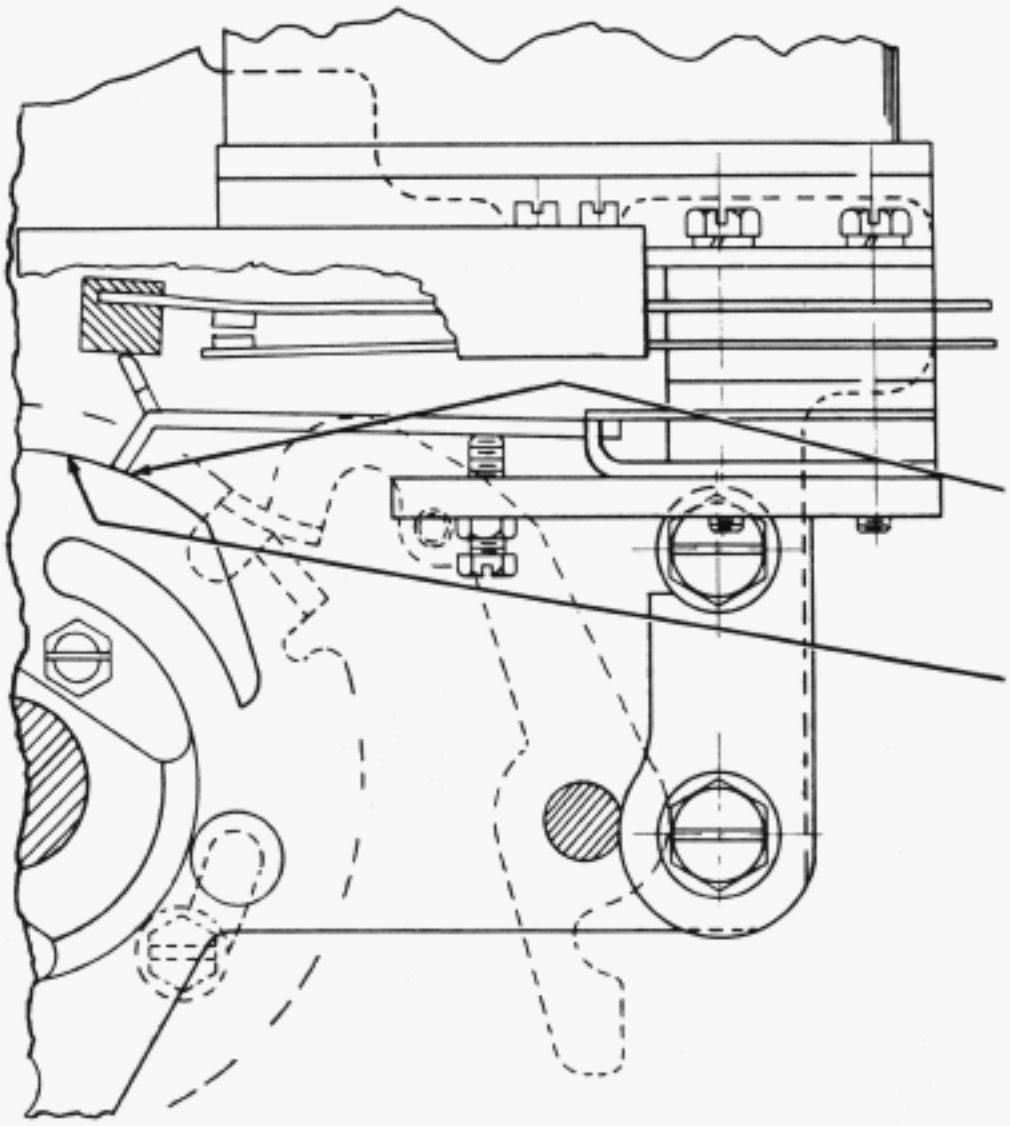

G	ENGAGING SURFACE	CAM FOLLOWER EXTENSION
O2	CAMMING SURFACE	CAM SEGMENT

NOTE -- AVOID GETTING GREASE OR OIL ON CONTACT SURFACES

7.45 REMOTE CONTROL GEAR SHIFT MECHANISM

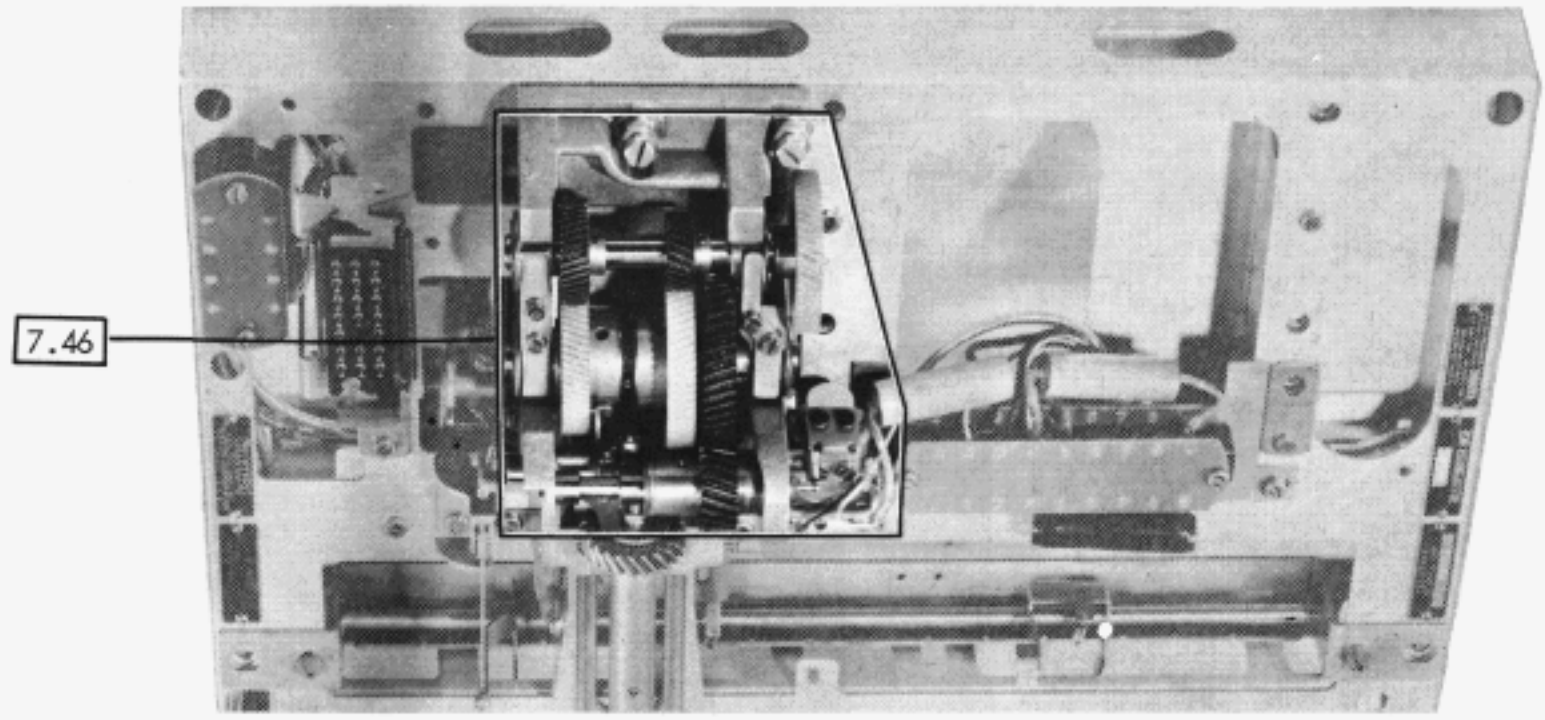

TOP VIEW

7.46 REMOTE CONTROL GEAR SHIFT

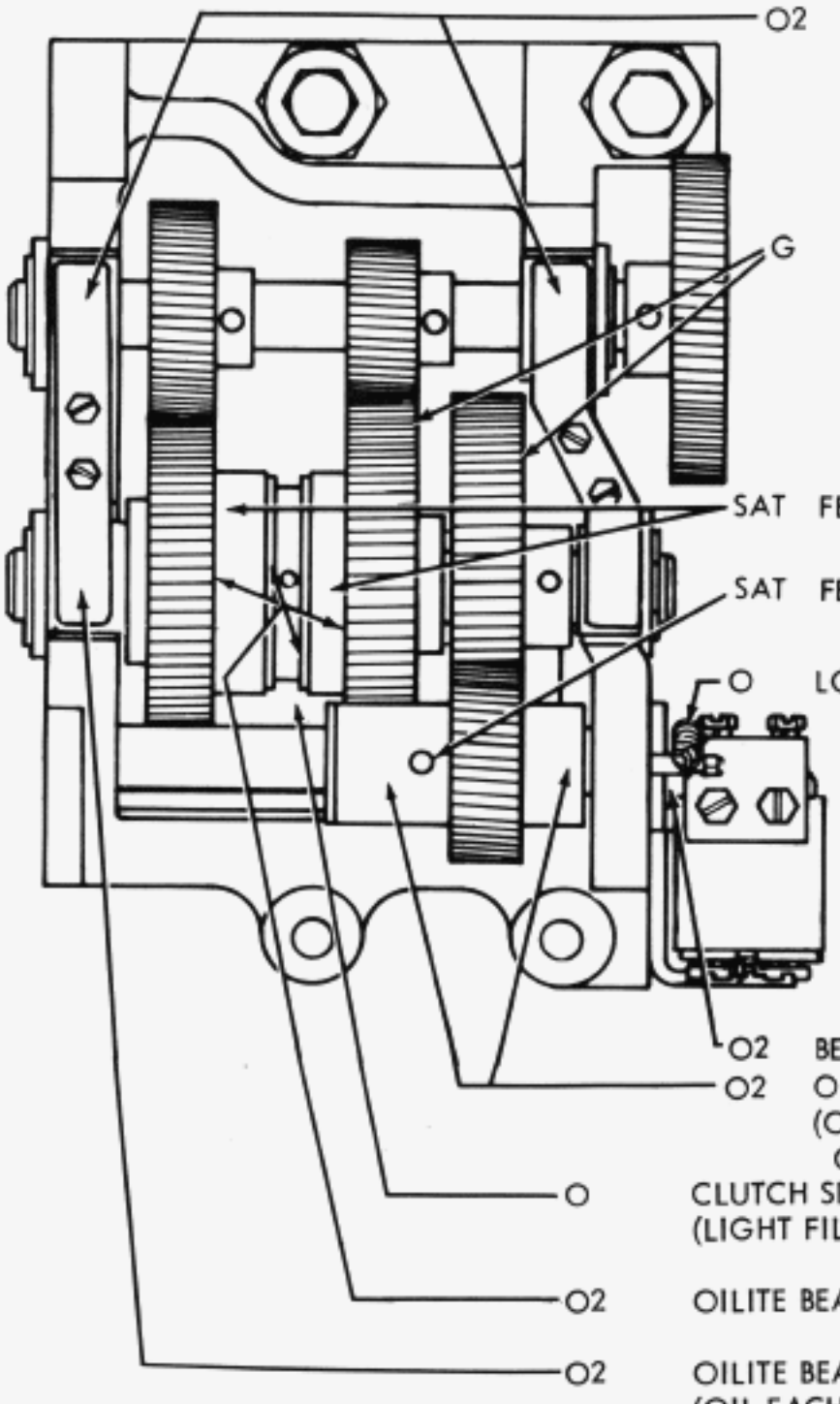

O2	OILITE BEARINGS (2) (OIL EACH SIDE OF BEARINGS)	DRIVEN GEAR BEARINGS
G	GEAR TEETH	EIGHT GEAR IN-CLUDING MOTOR PINION
SAT	FELT WICKS(2)	SPRING CLUTCHES
SAT	FELT WICK	IDLER GEAR
O	LOOPS - EACH END ARMATURE SPRING	
O2	BEARING POINTS	ARMATURE SHAFT
O2	OILITE BEARINGS (2) (OIL EACH SIDE OF BEARINGS)	IDLER GEAR BEARINGS
O	CLUTCH SPRINGS AND HUBS (LIGHT FILM DURING REASSEMBLY)	SPRING CLUTCHES
O2	OILITE BEARING WASHERS (4)	SPRING CLUTCHES
O2	OILITE BEARINGS (2) (OIL EACH SIDE)	60 AND 100 WPM DRIVER GEAR BEARINGS

7.47 FORM FEED-OUT MECHANISM

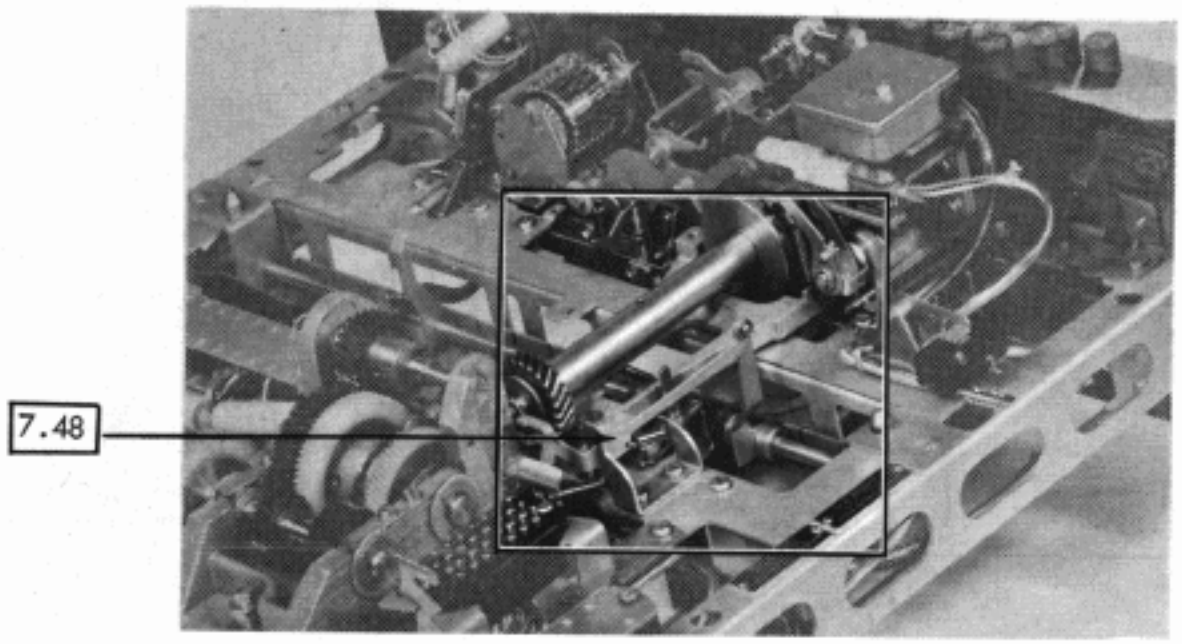

LEFT REAR VIEW

7.48 FORM FEED-OUT LINKAGE

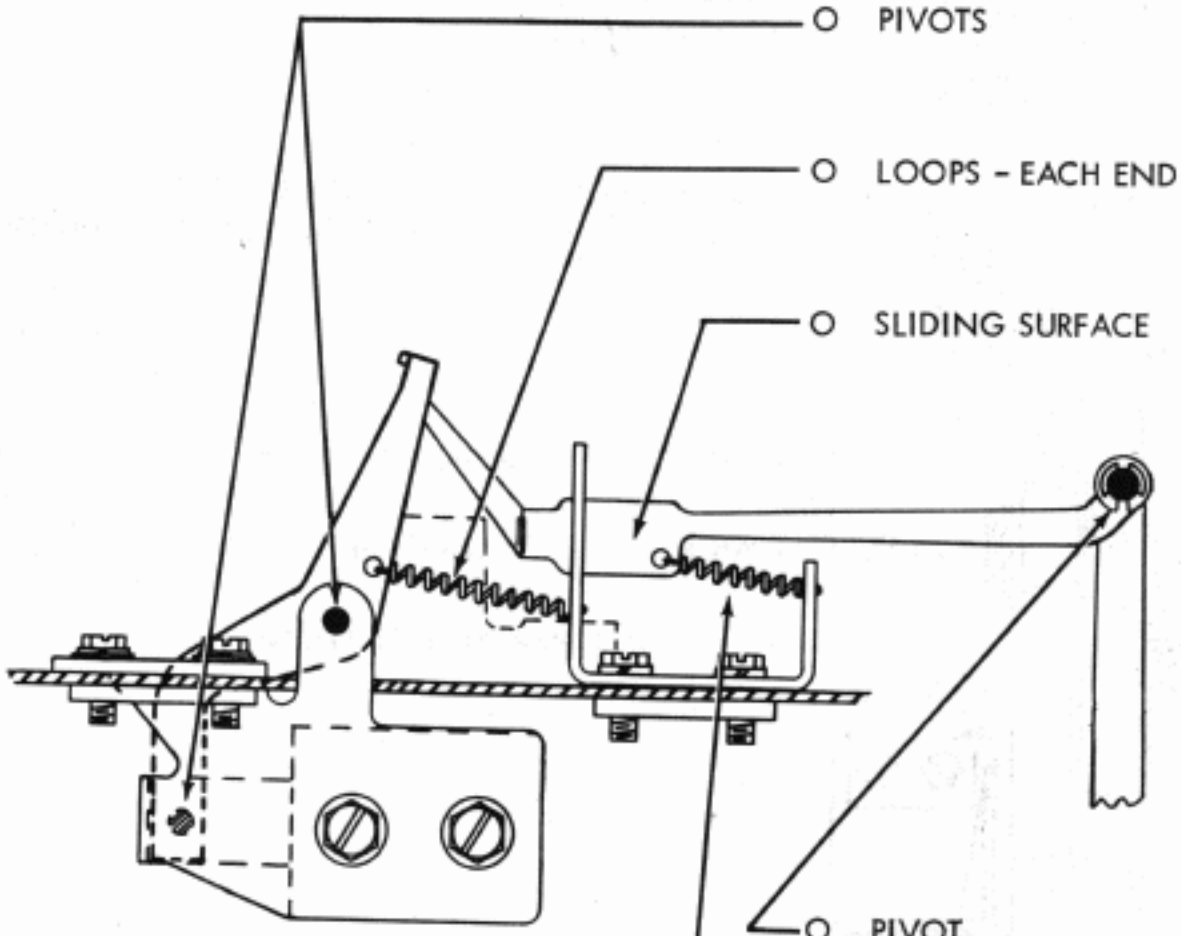

7.49 LOCK BAR CONTACT MECHANISM

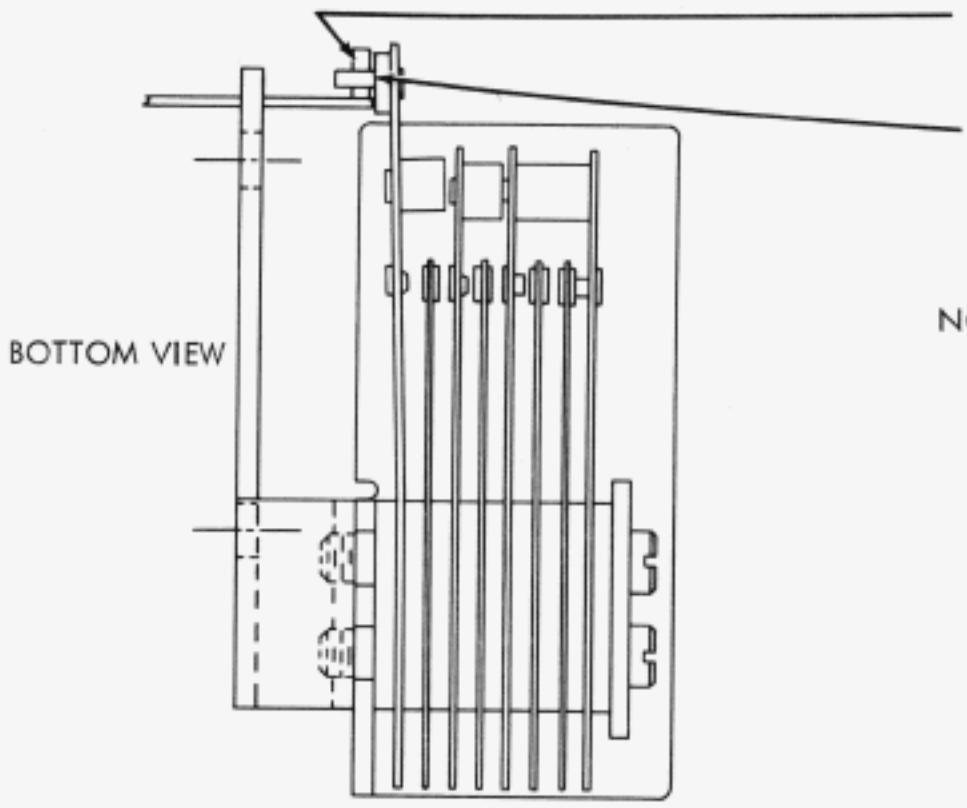

BOTTOM VIEW

O PIVOT POINT — LEVER

G ENGAGING SURFACE — LOCK BAR LEVER AND CONTACT INSULATOR

NOTE --- AVOID GETTING OIL OR GREASE ON CONTACT SURFACES

7.50 REPEAT ON SPACE MECHANISM

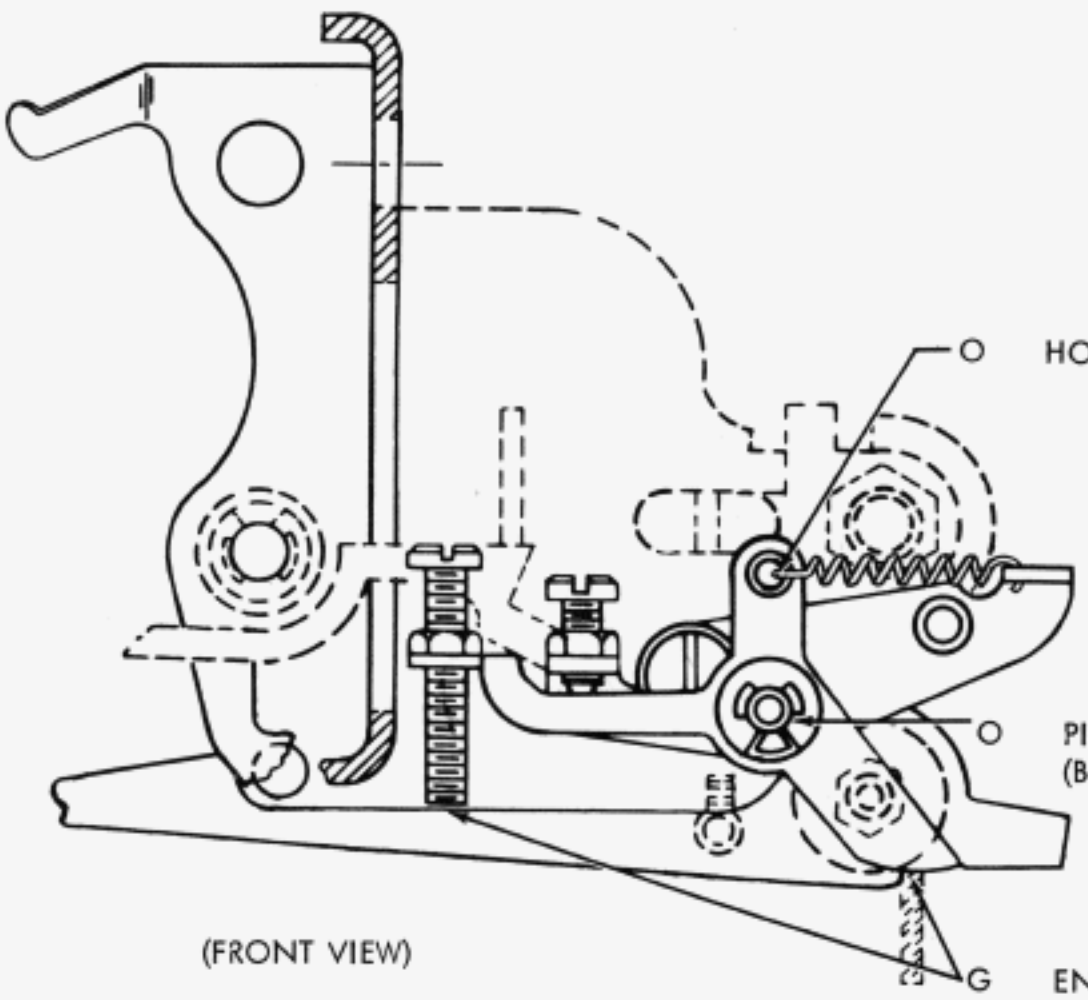

(FRONT VIEW)

O HOOKS — SPRING

O PIVOT (BOTH SIDES) — SPACE REPEAT LEVER

G ENGAGING SURFACES — NON-REPEAT LEVER AND SPACE KEYLEVER

SECTION 4 - EARLIER DESIGN MECHANISM ADJUSTMENTS

1. KEYBOARD

NOTE

IN ORDER TO PERFORM ALL SIGNAL GENERATOR ADJUSTMENTS, IT WILL BE NECESSARY TO REMOVE GENERATOR FROM THE KEYBOARD. SEE DISASSEMBLY AND REASSEMBLY PARAGRAPH 10.b.(1)

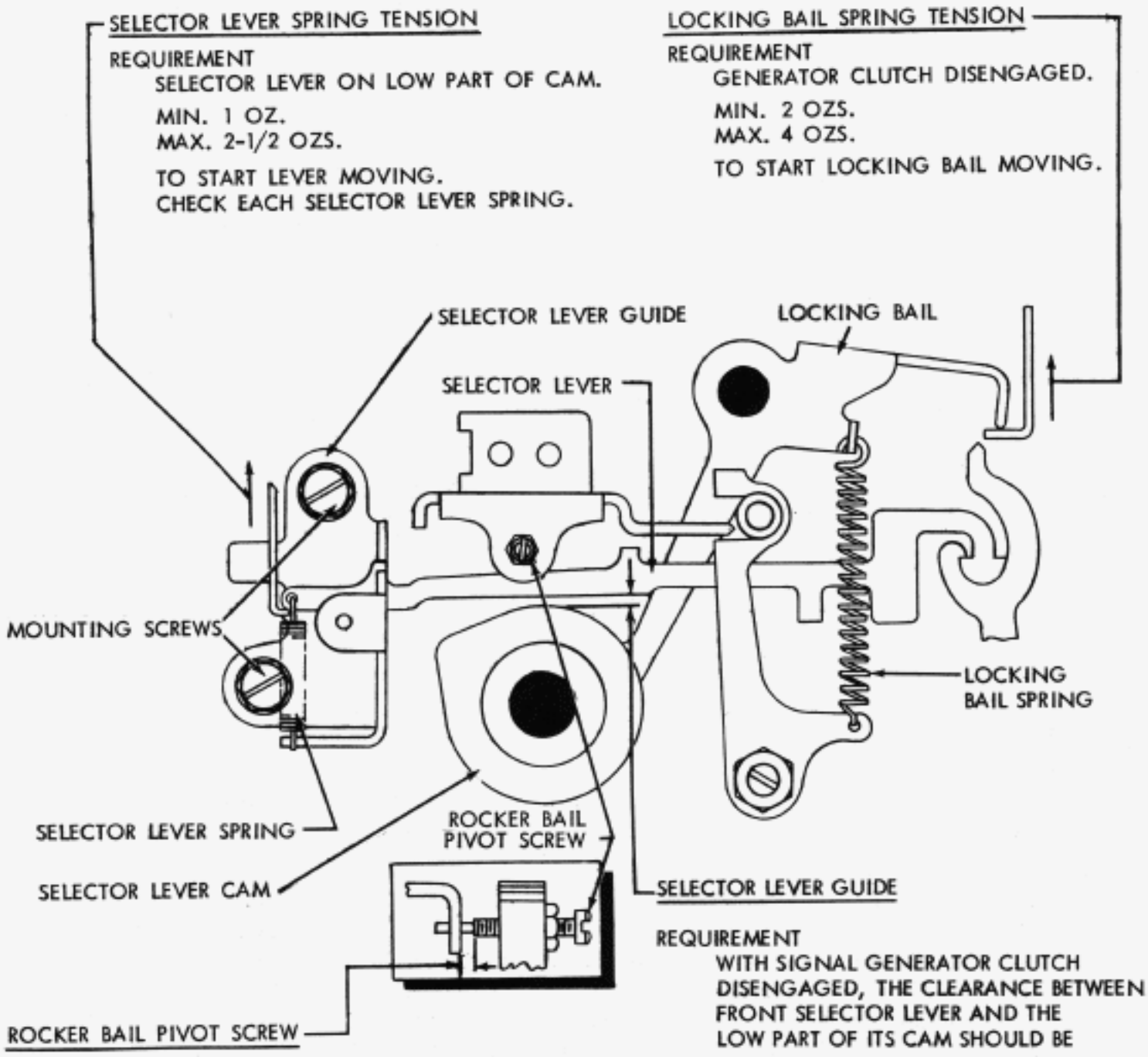

SELECTOR LEVER SPRING TENSION

REQUIREMENT
SELECTOR LEVER ON LOW PART OF CAM.

MIN. 1 OZ.
MAX. 2-1/2 OZS.

TO START LEVER MOVING.
CHECK EACH SELECTOR LEVER SPRING.

LOCKING BAIL SPRING TENSION

REQUIREMENT
GENERATOR CLUTCH DISENGAGED.

MIN. 2 OZS.
MAX. 4 OZS.

TO START LOCKING BAIL MOVING.

ROCKER BAIL PIVOT SCREW

REQUIREMENT
ROCKER BAIL FREE ON PIVOT WITH SOME END PLAY

MAX. 0.010 INCH

TO ADJUST
ROTATE PIVOT SCREW.

SELECTOR LEVER GUIDE

REQUIREMENT
WITH SIGNAL GENERATOR CLUTCH DISENGAGED, THE CLEARANCE BETWEEN FRONT SELECTOR LEVER AND THE LOW PART OF ITS CAM SHOULD BE

MIN. 0.004 INCH
MAX. 0.010 INCH

TO ADJUST
POSITION THE SELECTOR LEVER GUIDE WITH ITS MOUNTING SCREWS LOOSENED.

FIGURE 4-1 KEYBOARD, SIGNAL GENERATOR, FRONT VIEW

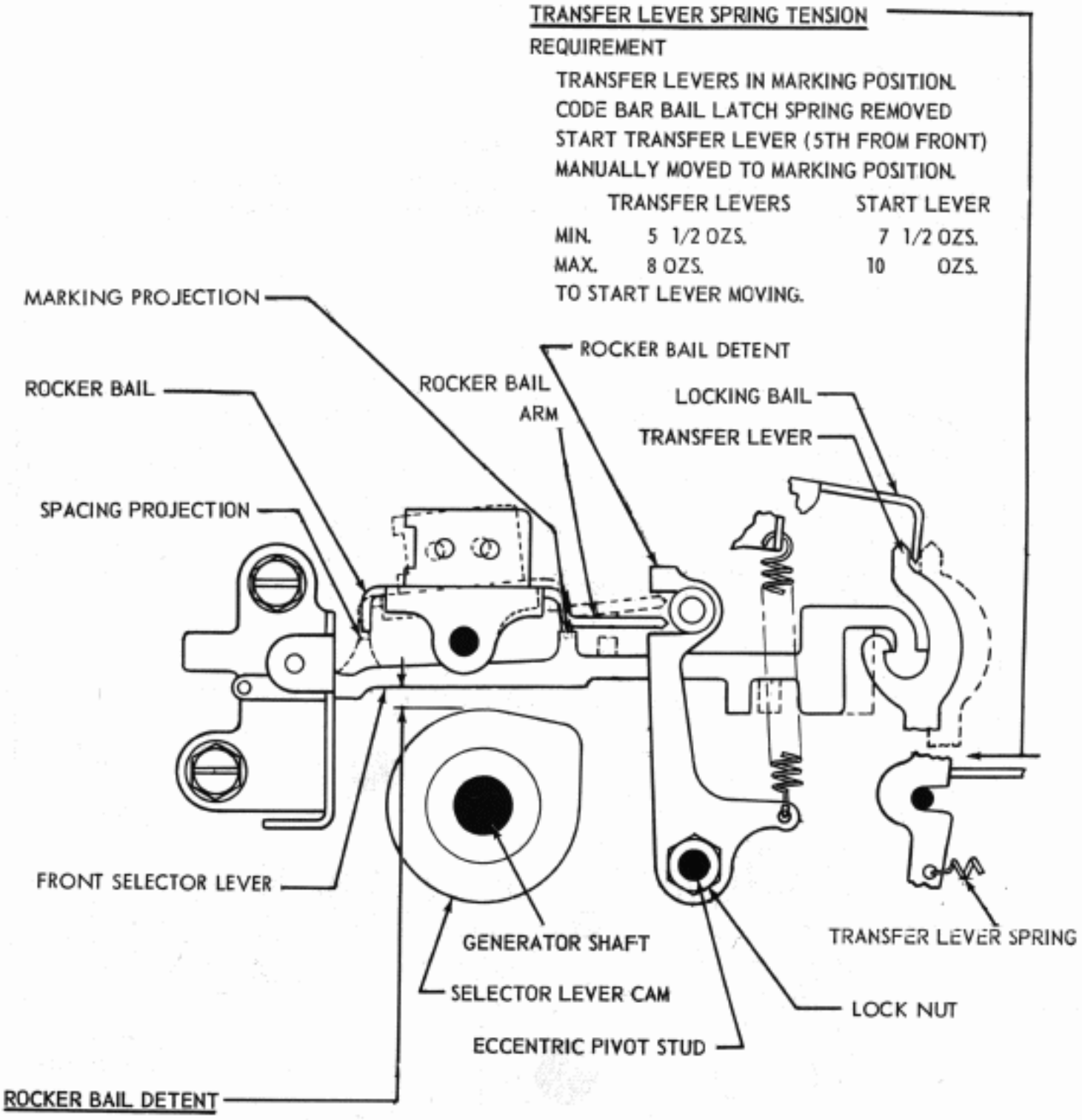

REQUIREMENT

CLEARANCE BETWEEN THE ROCKER BAIL ARM AND BOTH THE MARKING AND THE SPACING PROJECTIONS OF THE SELECTOR LEVERS SHOULD BE EQUAL WITHIN 0.005 INCH

TO CHECK

ROTATE THE CAM SLEEVE UNTIL THE FRONT SELECTOR LEVER HAS COME DOWN OFF THE PEAK OF ITS CAM AND IS OPPOSITE THE LOW PART OF ITS CAM. WITH THE FRONT SELECTOR LEVER IN THE MARKING (LEFT) POSITION, AND THE ROCKER BAIL ARM AGAINST THE LOWER STOP OF ITS DETENT, HOLD THE SELECTOR LEVER LIGHTLY UP AGAINST THE ROCKER BAIL AND GAUGE THE CLEARANCE BETWEEN THE SELECTOR LEVER AND THE CAM. SHIFT THE ROCKER BAIL ARM AGAINST THE UPPER STOP OF ITS DETENT AND HOLD FRONT SELECTOR LEVER TO THE RIGHT AND UP SO THAT THE SPACING PROJECTION TOUCHES THE ROCKER BAIL. GAUGE THE CLEARANCE BETWEEN THE SELECTOR LEVER AND THE CAM. THESE TWO CLEARANCES SHOULD BE EQUAL WITHIN 0.005 INCH.

TO ADJUST

EQUALIZE CLEARANCES BY ROTATING THE ECCENTRIC PIVOT STUD OF THE DETENT WITH ITS LOCK NUT LOOSENED. KEEP THE HIGH PART OF THE ECCENTRIC TOWARD THE GENERATOR SHAFT.

FIGURE 4-2 KEYBOARD, SIGNAL GENERATOR, FRONT VIEW

NOTE: REMOVE MECHANICAL BREAK LEVER AND SPRING OR ELECTRICAL BREAK LEVER, SPRING AND SWITCH, IF EQUIPPED. SEE FIGURE 4-45.

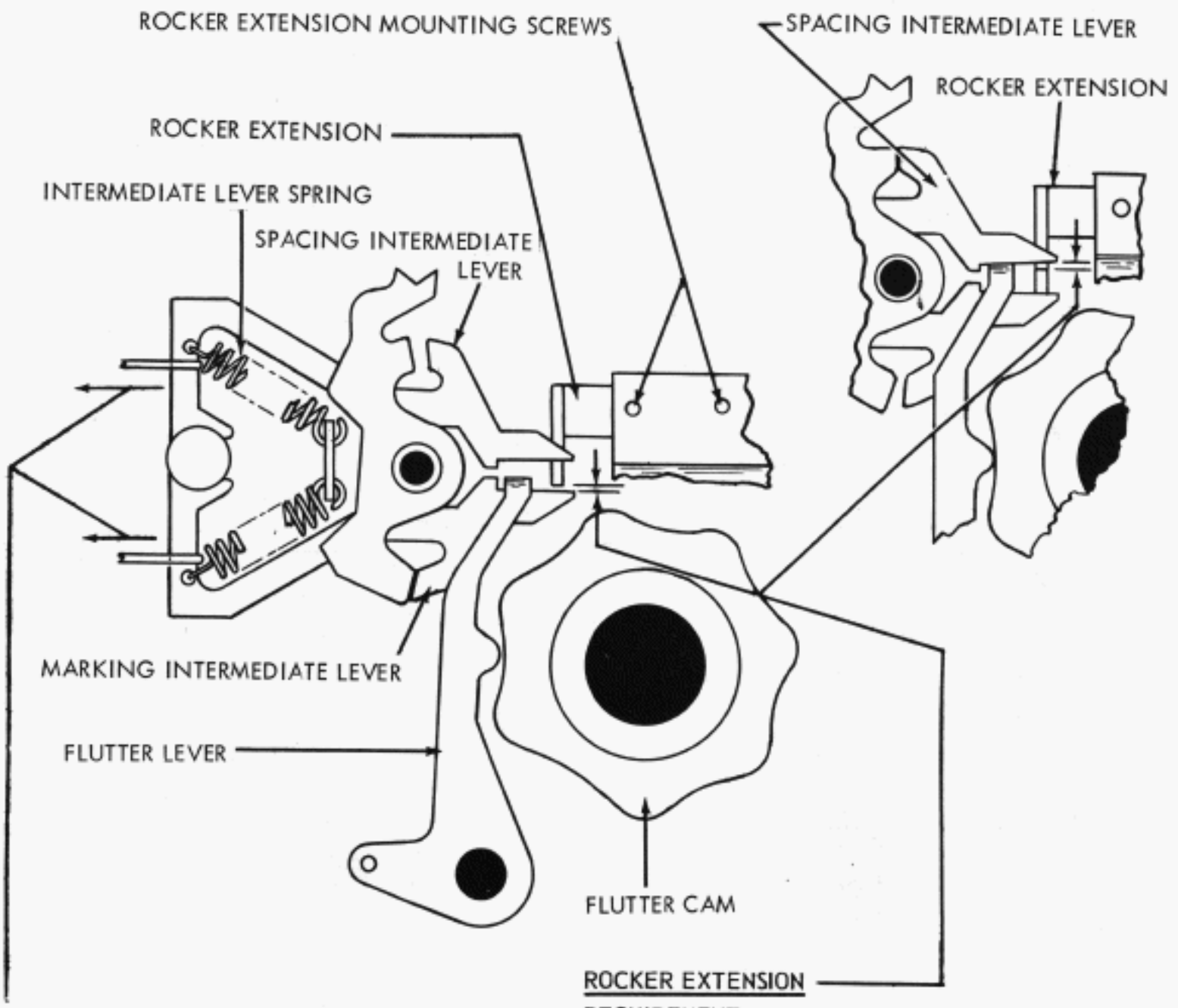

INTERMEDIATE LEVER SPRING TENSION

REQUIREMENT

CLUTCH DISENGAGED. PULL HORIZONTALLY, PARALLEL TO INTERMEDIATE LEVER'S PATH
MIN. 2 OZS.
MAX. 4 OZS.
TO START LEVER MOVING. CHECK SPACING AND MARKING LEVERS.

ROCKER EXTENSION

REQUIREMENT

EQUAL CLEARANCE (WITHIN 0.005 INCH) BETWEEN THE ROCKER EXTENSION AND BOTH THE MARKING AND THE SPACING INTERMEDIATE LEVERS WHEN SELECTED INDIVIDUALLY.

TO CHECK

ROTATE THE SHAFT UNTIL THE MARKING INTERMEDIATE LEVER IS SELECTED AND THE FLUTTER LEVER IS ON LOW PART OF CAM. GAUGE CLEARANCE IN LEFT FIG. REPEAT PROCEDURE FOR SPACING INTERMEDIATE LEVER. GAUGE CLEARANCE IN RIGHT FIGURE.

TO ADJUST

EQUALIZE CLEARANCES BY POSITIONING THE ROCKER EXTENSION WITH ITS MOUNTING SCREWS LOOSENED.

FIGURE 4-3. KEYBOARD, SIGNAL GENERATOR, REAR VIEW

DETENT TOGGLE STOP BRACKET

REQUIREMENT

CLEARANCE BETWEEN ENGAGING SURFACES OF SPACING AND MARKING INTERMEDIATE LEVERS AND ASSOCIATED SURFACES OF OSCILLATING LEVER SHOULD BE EQUAL WITHIN 0.004 INCH.

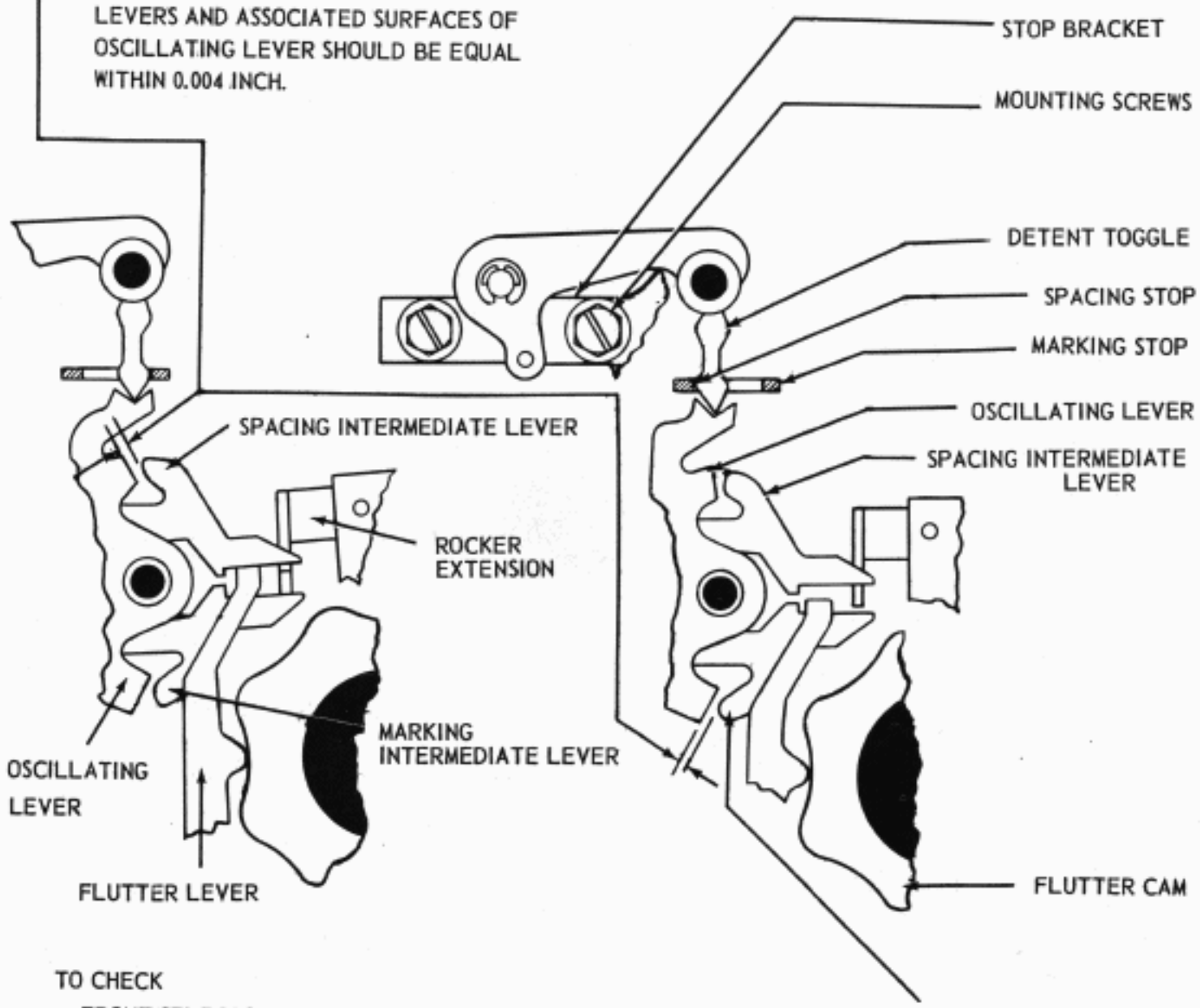

TO CHECK

FRONT SELECTOR LEVER IN MARKING POSITION, GENERATOR SHAFT ROTATED UNTIL FRONT SELECTOR LEVER IS ON PEAK OF ITS CAM. MOVE OSCILLATING LEVER TOWARD MARKING INTERMEDIATE LEVER AND GAUGE THE GAP. THEN WITH FRONT SELECTOR LEVER IN SPACING POSITION AND ON PEAK OF ITS CAM, MOVE OSCILLATING LEVER TOWARD SPACING INTERMEDIATE LEVER AND CHECK GAP.

TO ADJUST

EQUALIZE THE CLEARANCES BY POSITIONING THE STOP BRACKET WITH ITS MOUNTING SCREWS LOOSENED.

FIGURE 4-4 KEYBOARD, SIGNAL GENERATOR, REAR VIEW

NOTE: REMOVE MECHANICAL BREAK LEVER AND SPRING OR ELECTRICAL BREAK LEVER, SPRING AND SWITCH, IF EQUIPPED. SEE FIGURE 4-45.

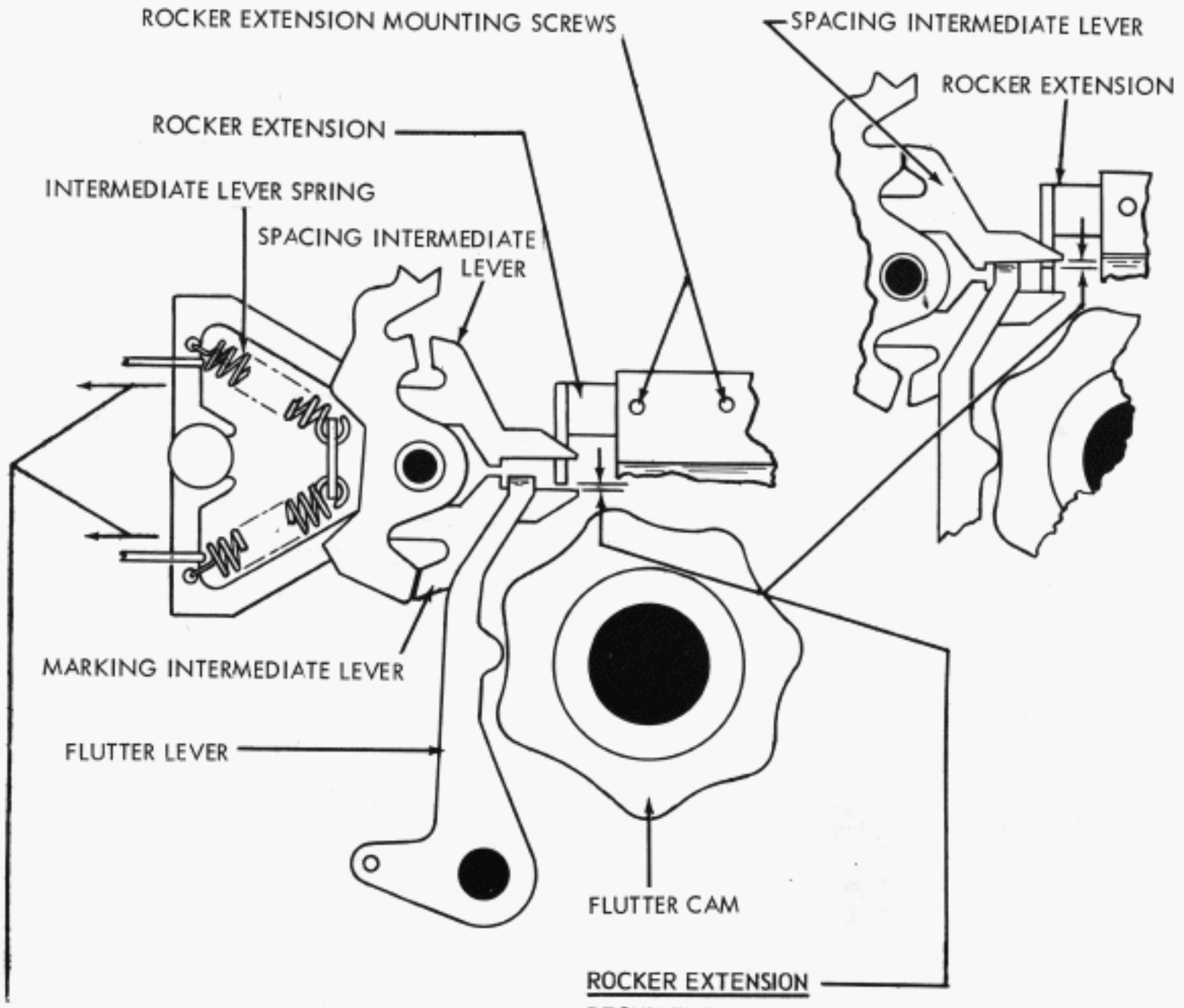

INTERMEDIATE LEVER SPRING TENSION

REQUIREMENT

CLUTCH DISENGAGED. PULL HORIZONTALLY, PARALLEL TO INTERMEDIATE LEVER'S PATH
MIN. 2 OZS.
MAX. 4 OZS.
TO START LEVER MOVING. CHECK SPACING AND MARKING LEVERS.

ROCKER EXTENSION

REQUIREMENT

EQUAL CLEARANCE (WITHIN 0.005 INCH) BETWEEN THE ROCKER EXTENSION AND BOTH THE MARKING AND THE SPACING INTERMEDIATE LEVERS WHEN SELECTED INDIVIDUALLY.

TO CHECK

ROTATE THE SHAFT UNTIL THE MARKING INTERMEDIATE LEVER IS SELECTED AND THE FLUTTER LEVER IS ON LOW PART OF CAM. GAUGE CLEARANCE IN LEFT FIG. REPEAT PROCEDURE FOR SPACING INTERMEDIATE LEVER. GAUGE CLEARANCE IN RIGHT FIGURE.

TO ADJUST

EQUALIZE CLEARANCES BY POSITIONING THE ROCKER EXTENSION WITH ITS MOUNTING SCREWS LOOSENED.

FIGURE 4-3. KEYBOARD, SIGNAL GENERATOR, REAR VIEW

DETENT TOGGLE STOP BRACKET

REQUIREMENT

CLEARANCE BETWEEN ENGAGING SURFACES OF SPACING AND MARKING INTERMEDIATE LEVERS AND ASSOCIATED SURFACES OF OSCILLATING LEVER SHOULD BE EQUAL WITHIN 0.004 INCH.

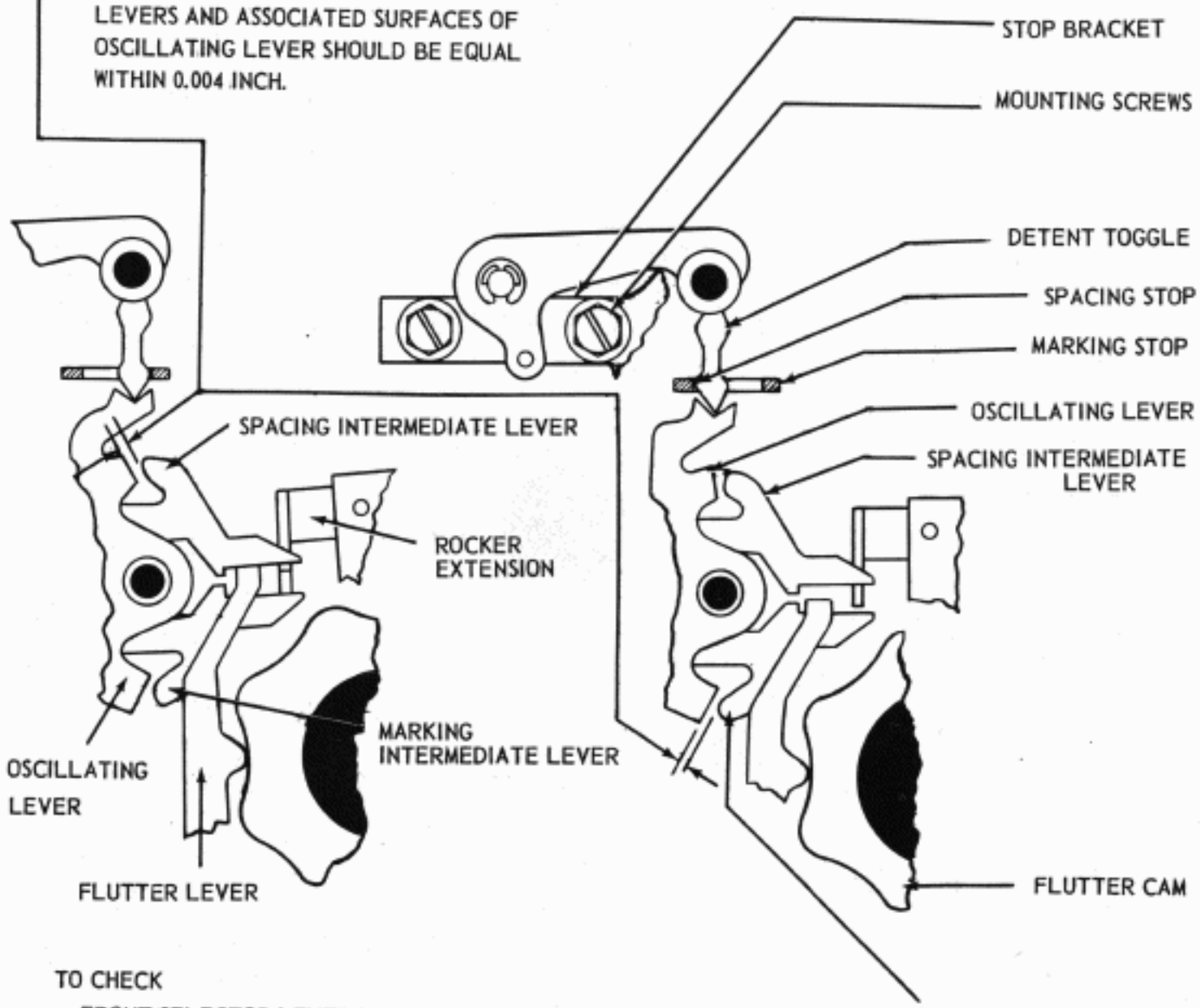

TO CHECK

FRONT SELECTOR LEVER IN MARKING POSITION, GENERATOR SHAFT ROTATED UNTIL FRONT SELECTOR LEVER IS ON PEAK OF ITS CAM. MOVE OSCILLATING LEVER TOWARD MARKING INTERMEDIATE LEVER AND GAUGE THE GAP. THEN WITH FRONT SELECTOR LEVER IN SPACING POSITION AND ON PEAK OF ITS CAM, MOVE OSCILLATING LEVER TOWARD SPACING INTERMEDIATE LEVER AND CHECK GAP.

TO ADJUST

EQUALIZE THE CLEARANCES BY POSITIONING THE STOP BRACKET WITH ITS MOUNTING SCREWS LOOSENED.

FIGURE 4-4 KEYBOARD, SIGNAL GENERATOR, REAR VIEW

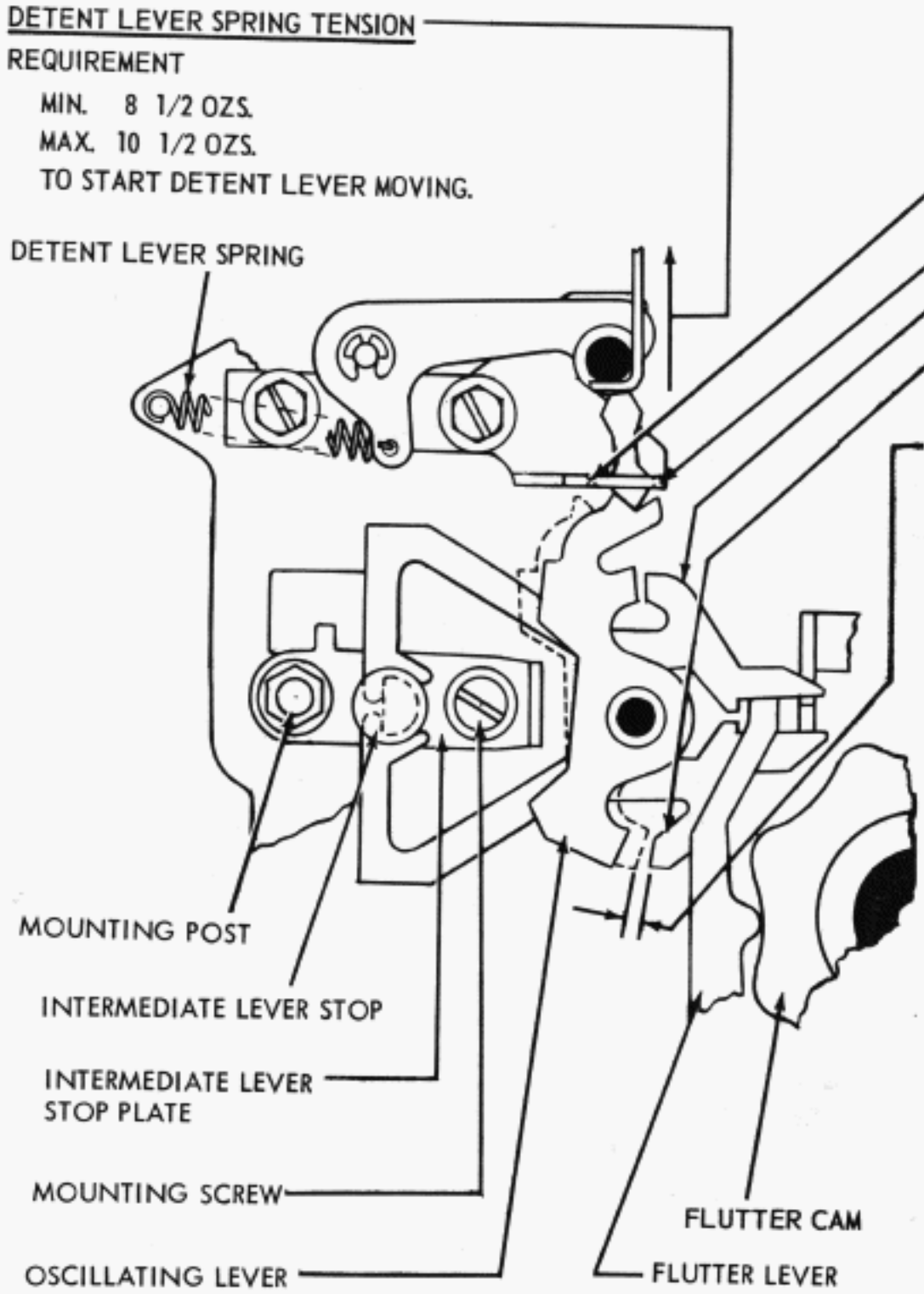

NOTE: REPLACE THE BREAK LEVER AND ASSOCIATED PARTS

FIGURE 4-5 KEYBOARD, SIGNAL GENERATOR, REAR VIEW

(A) FLUTTER LEVER SPRING TENSION

REQUIREMENT

WITH SIGNAL GENERATOR CLUTCH DISENGAGED AND SPACING INTERMEDIATE LEVER HELD AWAY FROM FLUTTER LEVER, INSERT SCALE BETWEEN CASTING AND BREAK ROD.
MIN. 1 OZ.
MAX. 2 1/4 OZS.
TO START FLUTTER LEVER MOVING.

(B) FLUTTER LEVER

(1) REQUIREMENT

WITH THE FLUTTER LEVER ON EACH LOW PORTION OF ITS CAM AND THE MARKING AND SPACING INTERMEDIATE LEVERS ALTERNATELY SELECTED, THE CLEARANCE BETWEEN THE FLUTTER LEVER AND LATCHING SURFACE OF SELECTED INTERMEDIATE LEVER SHOULD BE
MIN. 0.005 INCH
MAX. 0.018 INCH

WITH THE CLUTCH ENGAGED AND THE SELECTOR LEVERS (FIG. 2) TO MARKING (LEFT), ROTATE THE GENERATOR SHAFT TO CHECK CLEARANCE ON MARKING INTERMEDIATE LEVERS. HOLD SELECTOR LEVERS TO SPACING (RIGHT) AND ROTATE SHAFT TO CHECK SPACING INTERMEDIATE LEVERS.

TO ADJUST

POSITION THE FLUTTER LEVER MOUNTING STUD IN THE ELONGATED MOUNTING HOLE WITH THE LOCK NUT LOOSENED.

(2) REQUIREMENT

AFTER REQUIREMENT (1) HAS BEEN MET, SELECT THE MARKING AND SPACING INTERMEDIATE LEVERS ALTERNATELY AND ROTATE THE GENERATOR SHAFT UNTIL THE FLUTTER LEVER IS ON SUCCESSIVE HIGH PORTIONS OF ITS CAM. UNDER THESE CONDITIONS THERE SHOULD BE SOME CLEARANCE BETWEEN THE OSCILLATOR AND THE SELECTED INTERMEDIATE LEVER.

TO ADJUST

REFINE THE FLUTTER LEVER ADJUSTMENT AND RECHECK REQUIREMENT (1).

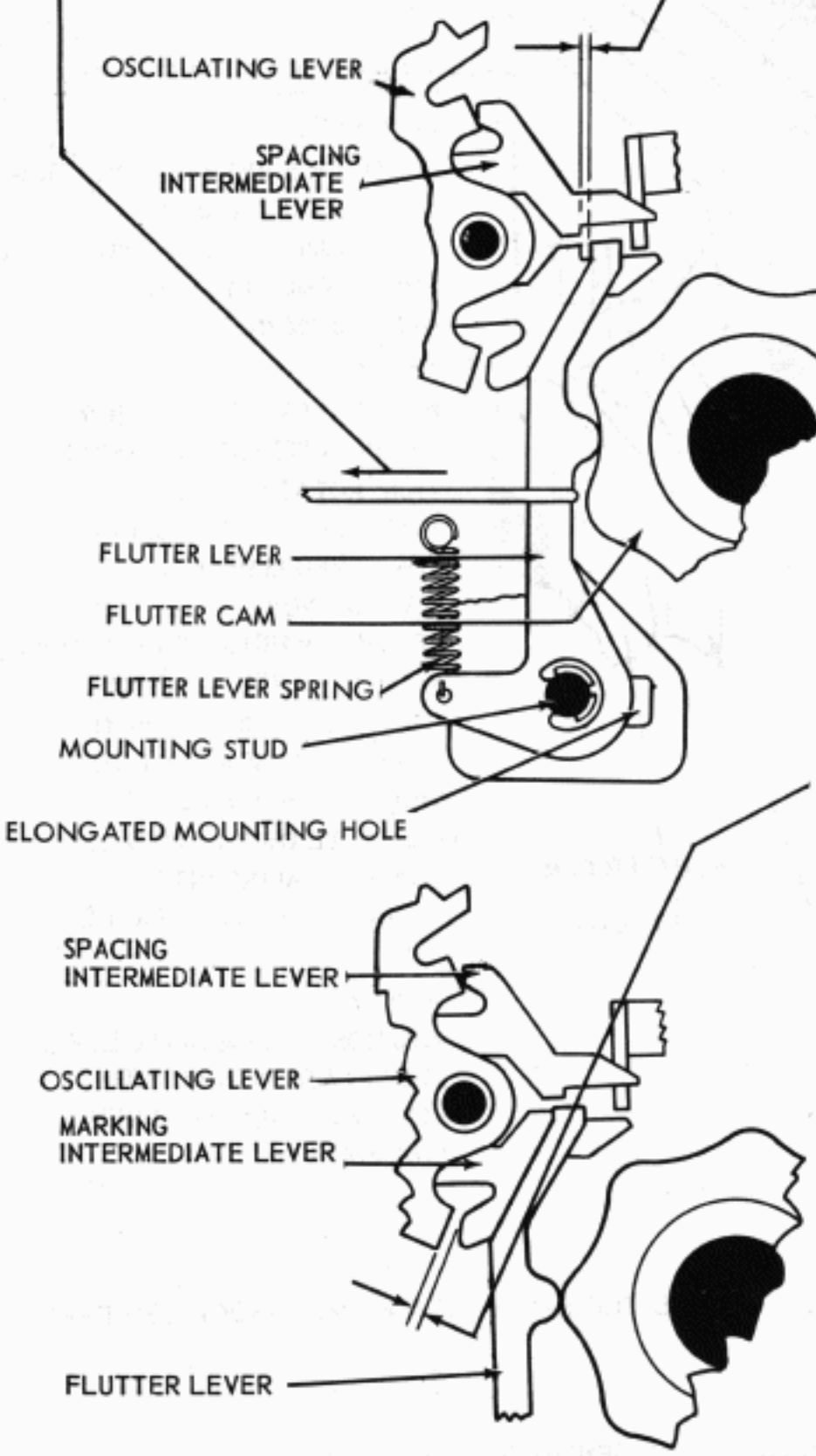

FIGURE 4-6 KEYBOARD, SIGNAL GENERATOR. REAR VIEW

FOR CLUTCH SHOE LEVER SPRING TENSION AND CLUTCH SHOE SPRING TENSION SEE FIGURE 1-35

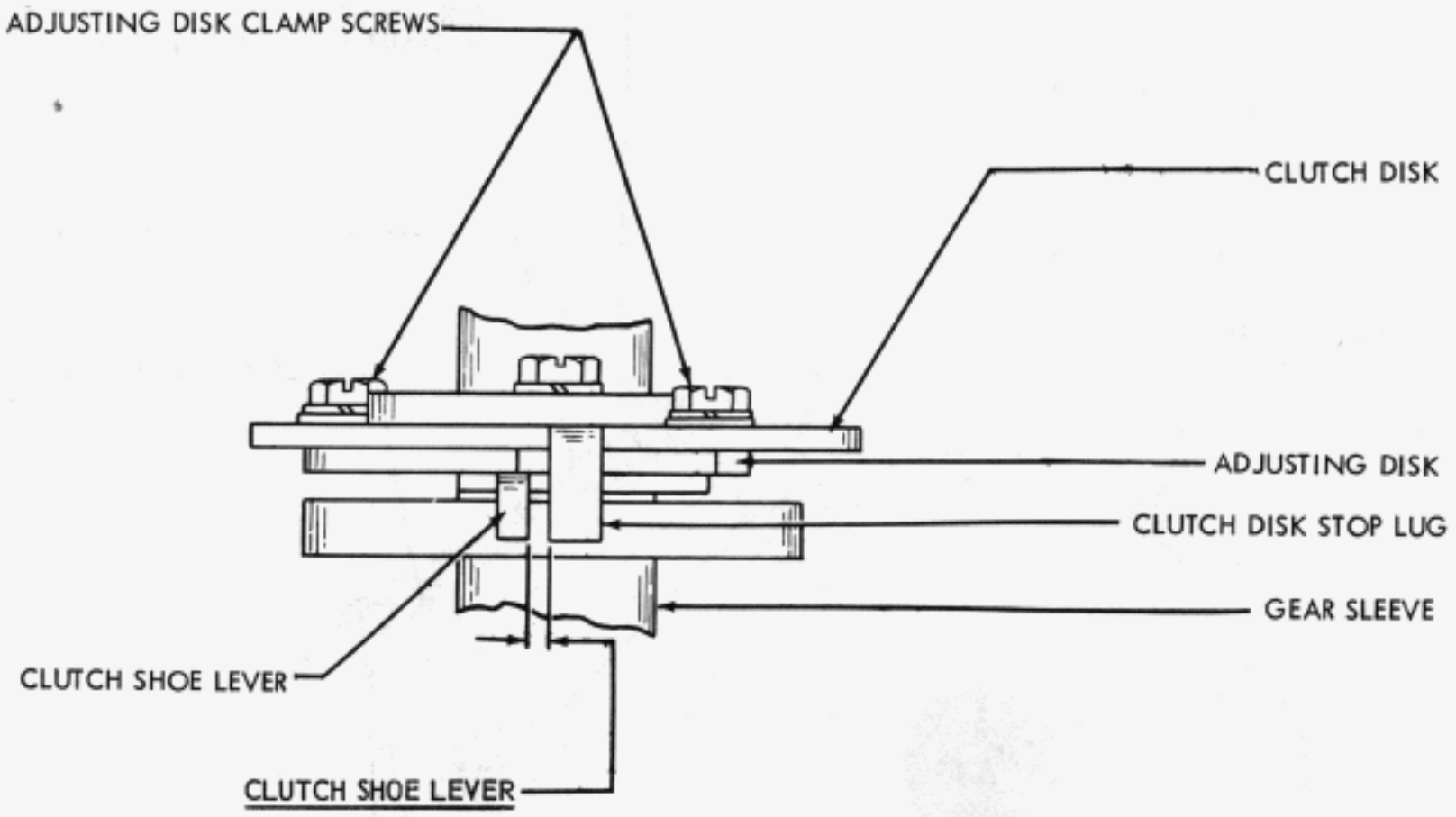

REQUIREMENT

CLEARANCE WHEN CLUTCH IS DISENGAGED SHOULD BE 0.055 INCH TO 0.085 INCH LESS THAN WHEN CLUTCH IS ENGAGED.

TO CHECK

LATCH CLUTCH IN DISENGAGED POSITION AND MEASURE CLEARANCE. ROTATE GEAR UNTIL OIL HOLE IS UPWARD. ENGAGE CLUTCH AND MEASURE CLEARANCE.

TO ADJUST

LOOSEN THE TWO ADJUSTING DISK CLAMP SCREWS TO POSITION DISK.

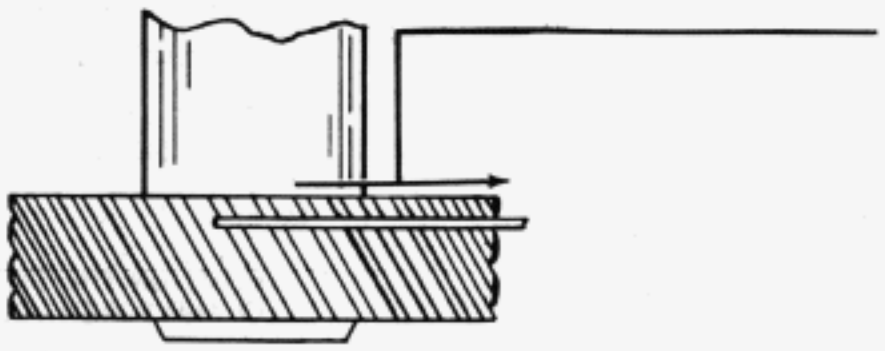

FIGURE 4-7 KEYBOARD, CLUTCH MECHANISM,TOP VIEW

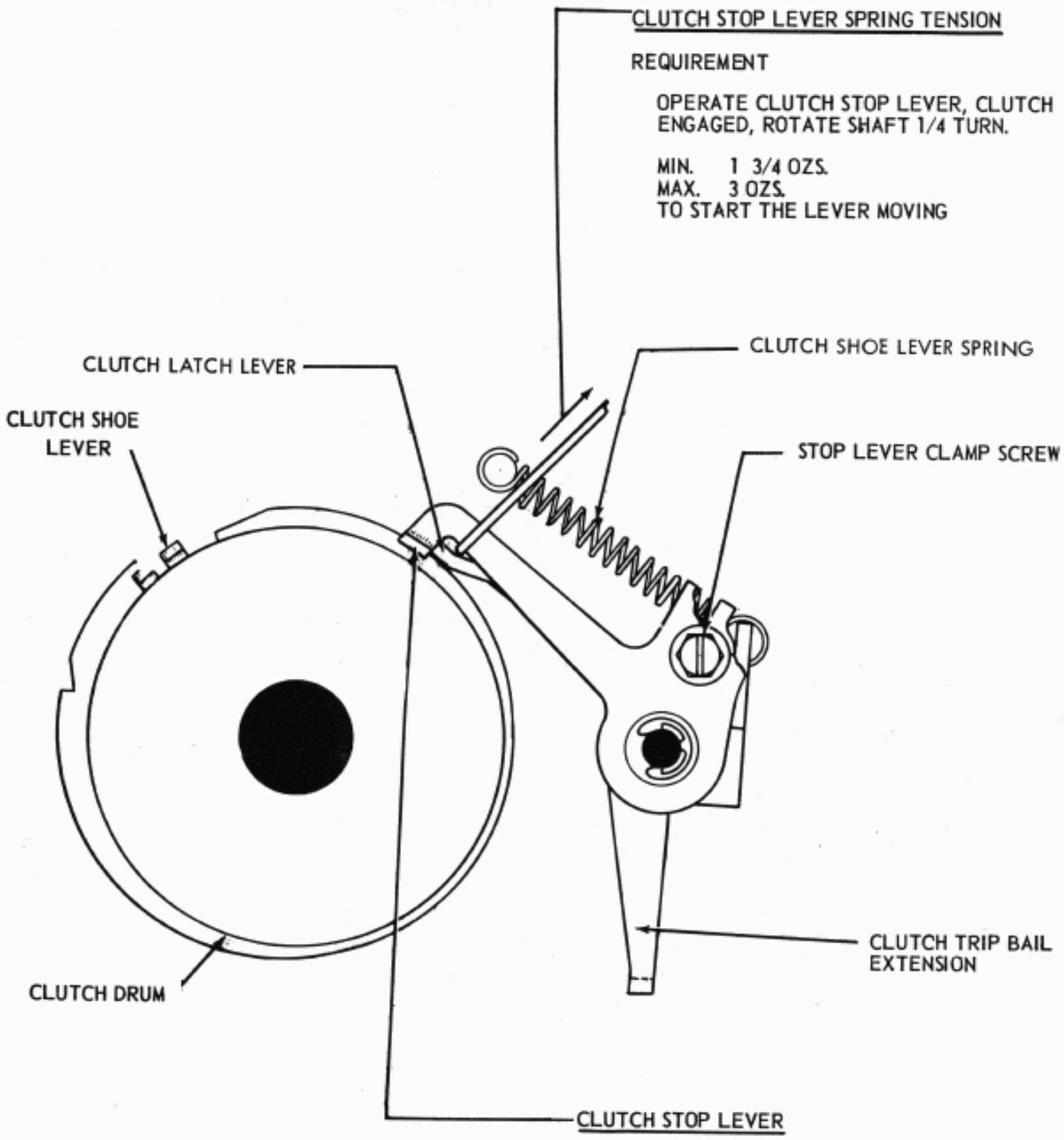

FIGURE 4-8 KEYBOARD, CLUTCH MECHANISM

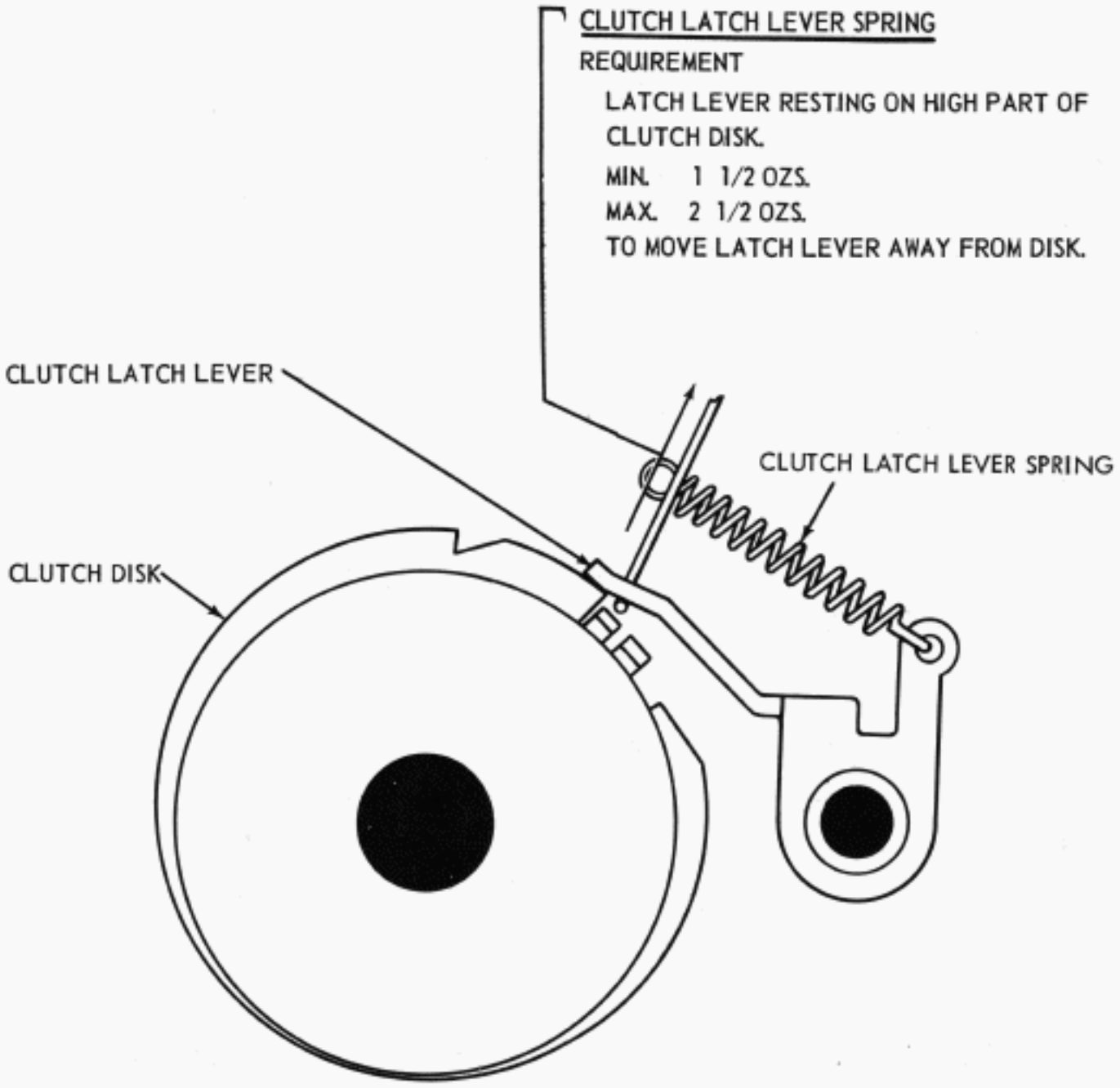

NOTE

REPLACE SIGNAL GENERATOR ON THE KEYBOARD. MAKE CERTAIN THAT THE CODE BAR BAIL LATCH LEVER (FIG. 4-11) IS UNDER CODE LEVER BAIL LATCH LEVER (FIG. 4-13), THAT (IF EQUIPPED) BREAK KEY ROD, ATTACHED TO BREAK LEVER (FIG. 4-45) IS IN ITS GUIDE HOLE IN CODE LEVER GUIDE, AND THAT THE CLUTCH TRIP BAIL EXTENSION (FIG. 4-8) IS IN THE NOTCH PROVIDED IN THE CLUTCH TRIP BAR (REAR) AND THAT THE CODE BAR BAIL (FIGURE 4-11) IS RESTING IN THE NOTCHES OF THE FIVE CODE BARS, THE CLUTCH TRIP BAR AND THE KEYLEVER UPSTOP BAR. SEE DISASSEMBLY AND REASSEMBLY PARAGRAPH 10.b.(1).

FIGURE 4-9 KEYBOARD, CLUTCH MECHANISM

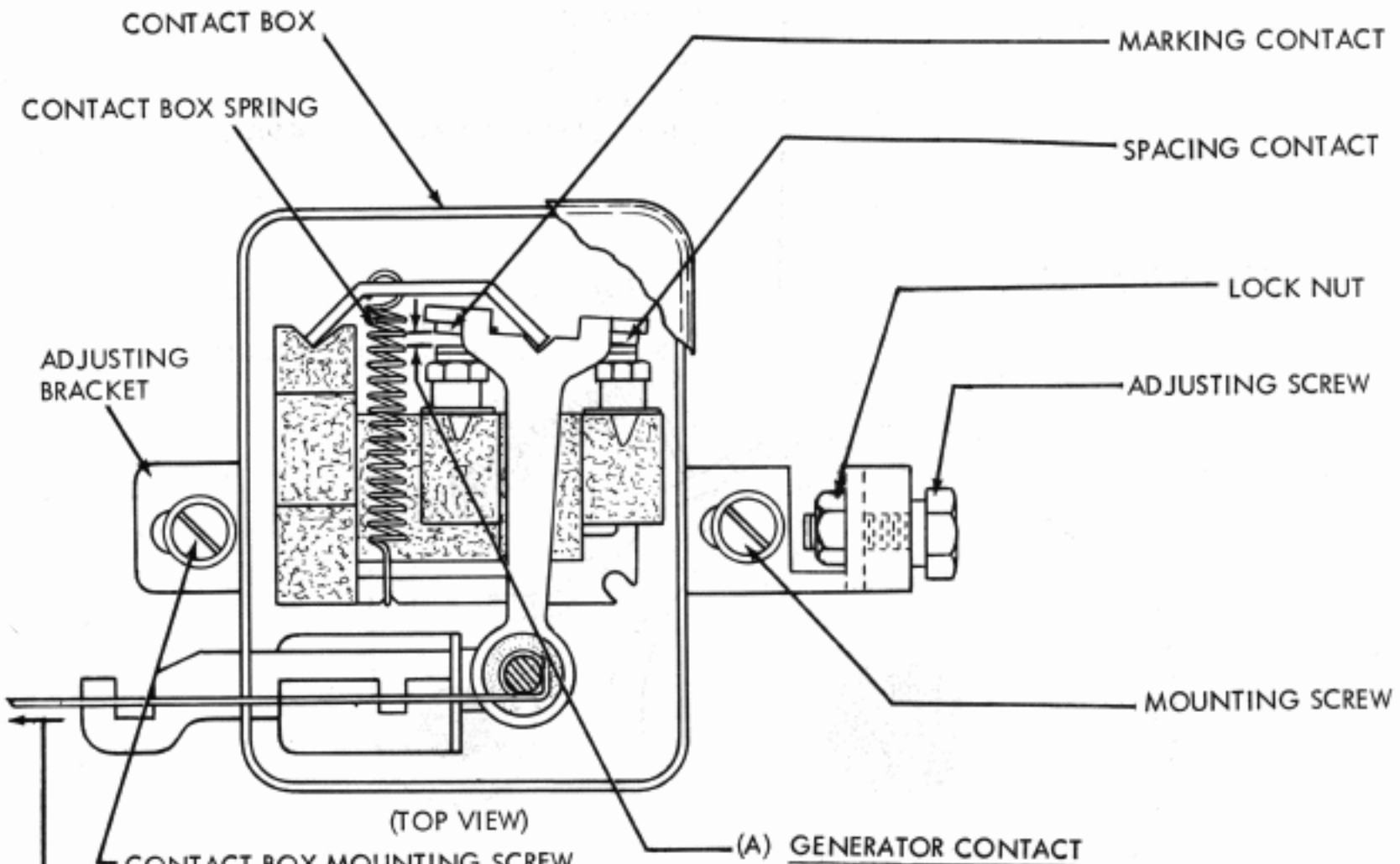

(A) GENERATOR CONTACT

REQUIREMENT

THE MARKING AND SPACING CONTACT GAPS SHOULD BE EQUAL

TO CHECK

REMOVE THE COVER FROM THE CONTACT BOX. FIRST, MOVE THE DETENT TOGGLE AGAINST ITS SPACING STOP AND GAUGE THE MARKING CONTACT GAP. THEN MOVE THE DETENT TOGGLE AGAINST ITS MARKING STOP AND GAUGE SPACING CONTACT GAP.

TO ADJUST

ROTATE THE CONTACT BOX ADJUSTING SCREW WITH ITS LOCK NUT LOOSENED AND WITH THE CONTACT BOX MOUNTING SCREWS FRICTION TIGHT. REPLACE CONTACT BOX COVER.

NOTE

CHECK BY MEANS OF A SIGNAL CHECKING DEVICE WHERE POSSIBLE AND CAREFULLY REFINE THE ADJUSTMENT TO ELIMINATE ALL BIAS FROM THE SIGNALS BY EQUALIZING THE CURRENT-ON AND CURRENT-OFF INTERVALS.

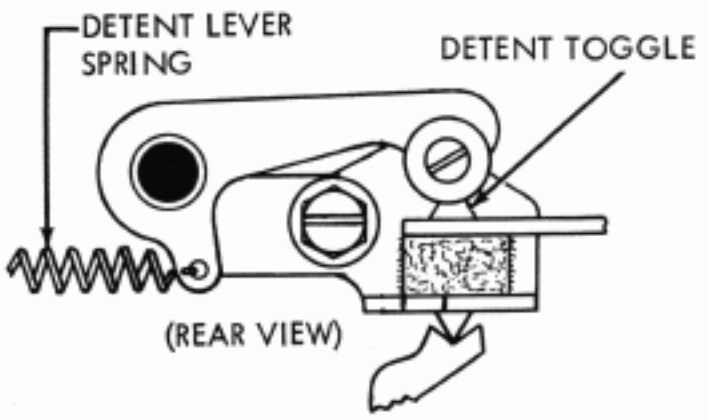

(B) CONTACT BOX SPRING TENSION

REQUIREMENT

CONTACT BOX COVER REMOVED. DETENT LEVER SPRING DISCONNECTED.

MIN. 2 OZS.
MAX. 4 OZS.
TO BREAK CONTACT

FIGURE 4-10 KEYBOARD, CONTACT ASSEMBLY

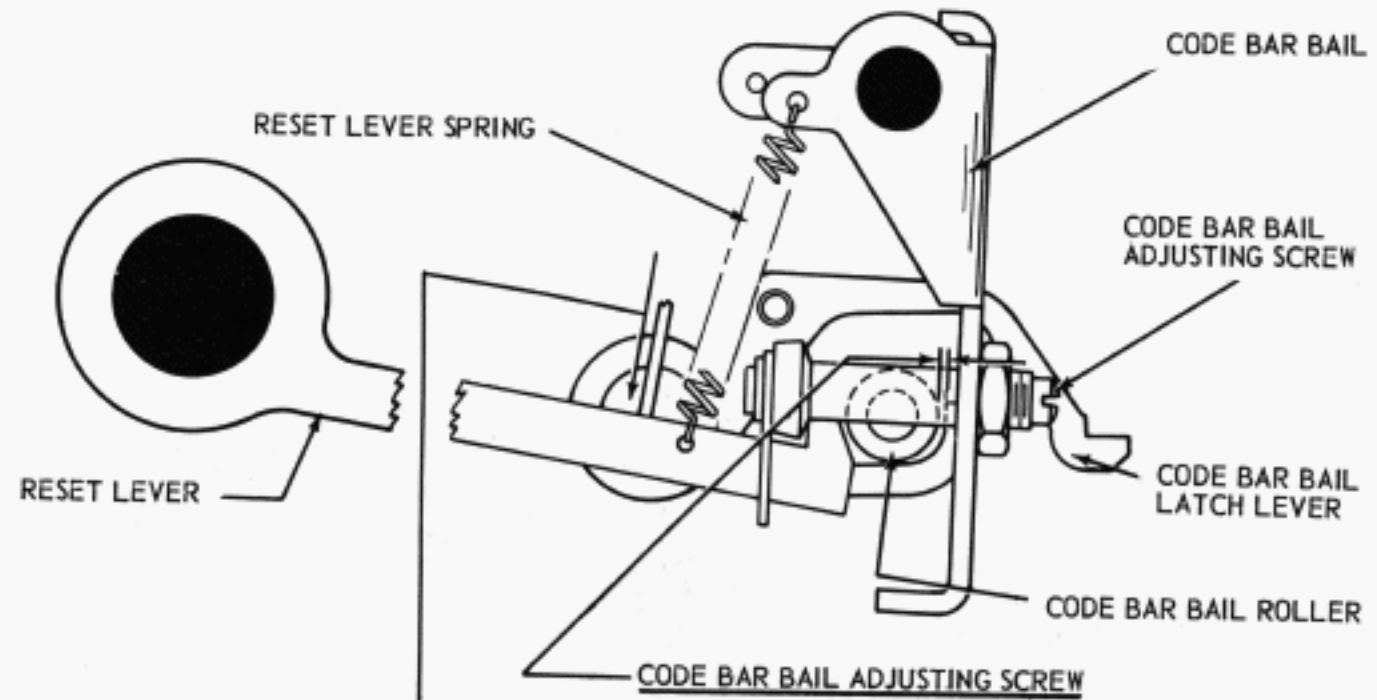

CODE BAR BAIL ADJUSTING SCREW

REQUIREMENT

CLUTCH ENGAGED. LTRS. COMBINATION SELECTED
CLUTCH ROTATED 1/2 TURN UNTIL RESET
LEVER IS IN EXTREME LEFT HAND POSITION.
CLEARANCE BETWEEN THE CODE BAR BAIL
LATCH LEVER AND CODE BAR BAIL ROLLER.
MIN. 0.004 INCH
MAX. 0.008 INCH

TO ADJUST

POSITION THE CODE BAR BAIL ADJUSTING
SCREW WITH ITS LOCK NUT LOOSENED.

RESET LEVER SPRING TENSION

REQUIREMENT

CLUTCH DISENGAGED.
MIN. 2 OZS.
MAX. 4 OZS.

TO START THE RESET LEVER
MOVING.

FIGURE 4-11 KEYBOARD, CODE BAR BAIL MECHANISM, FRONT VIEW

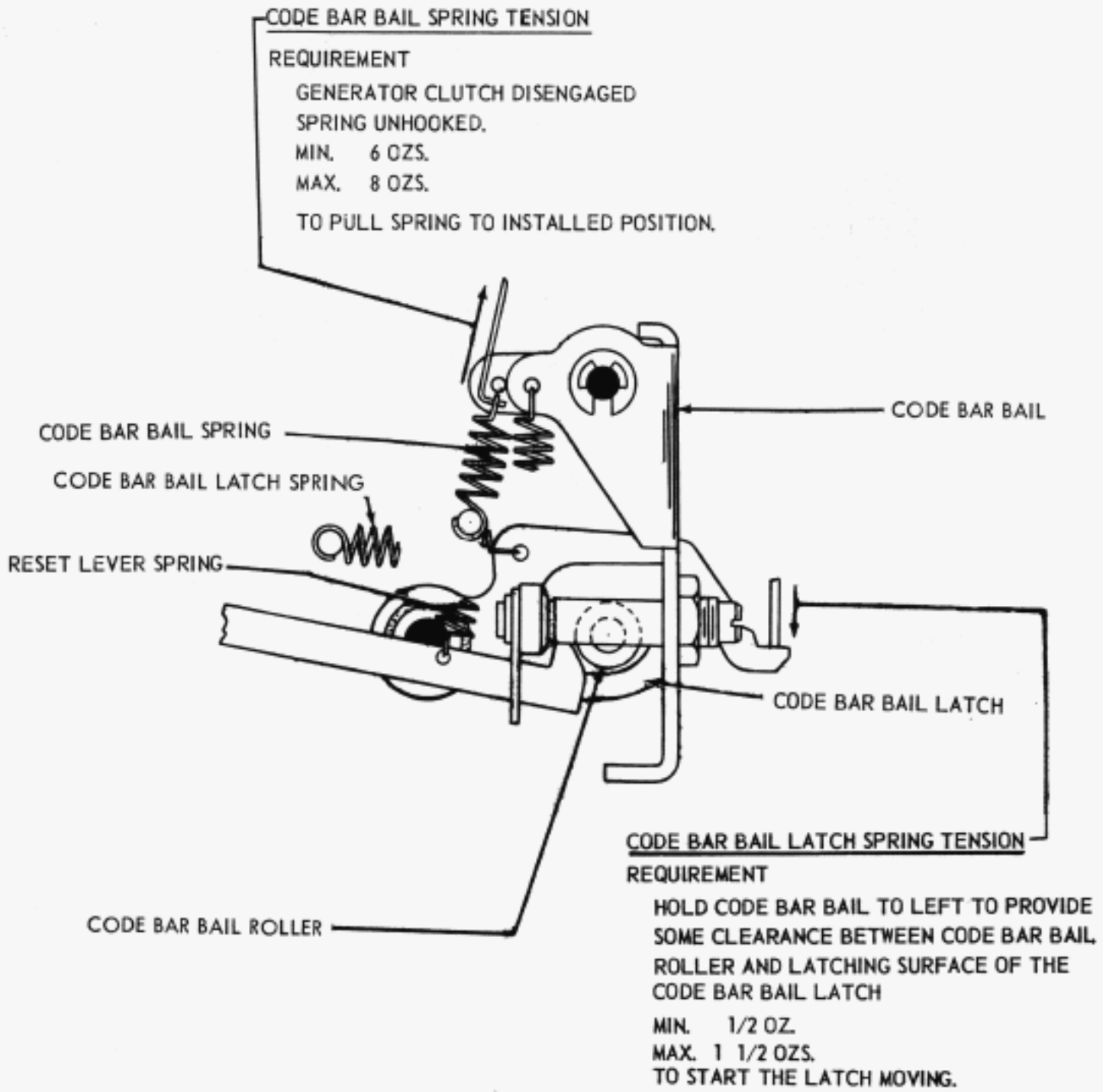

FIGURE 4-12 KEYBOARD, CODE BAR BAIL, FRONT VIEW

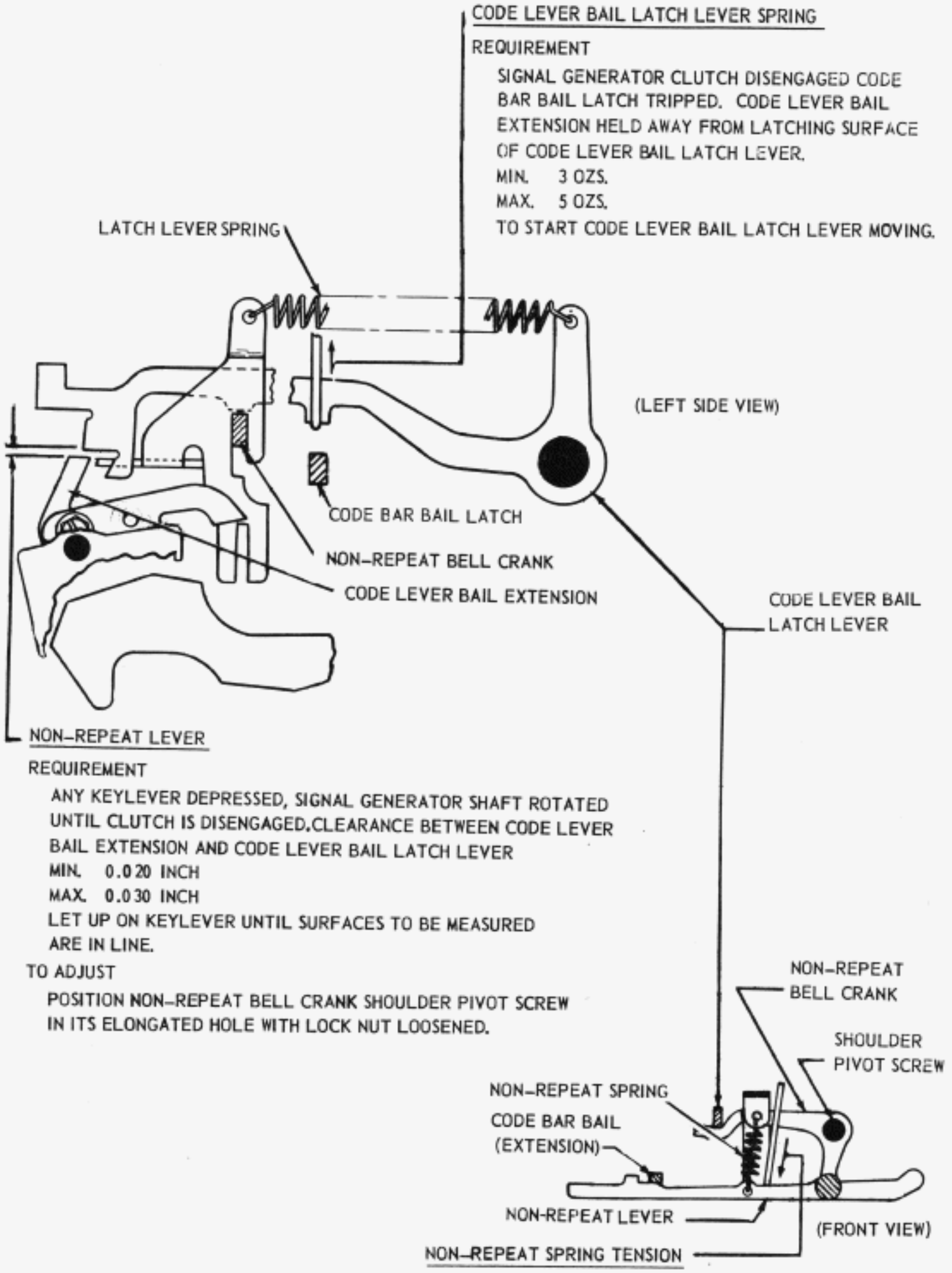

FIGURE 4-13 KEYBOARD, NON-REPEAT MECHANISM

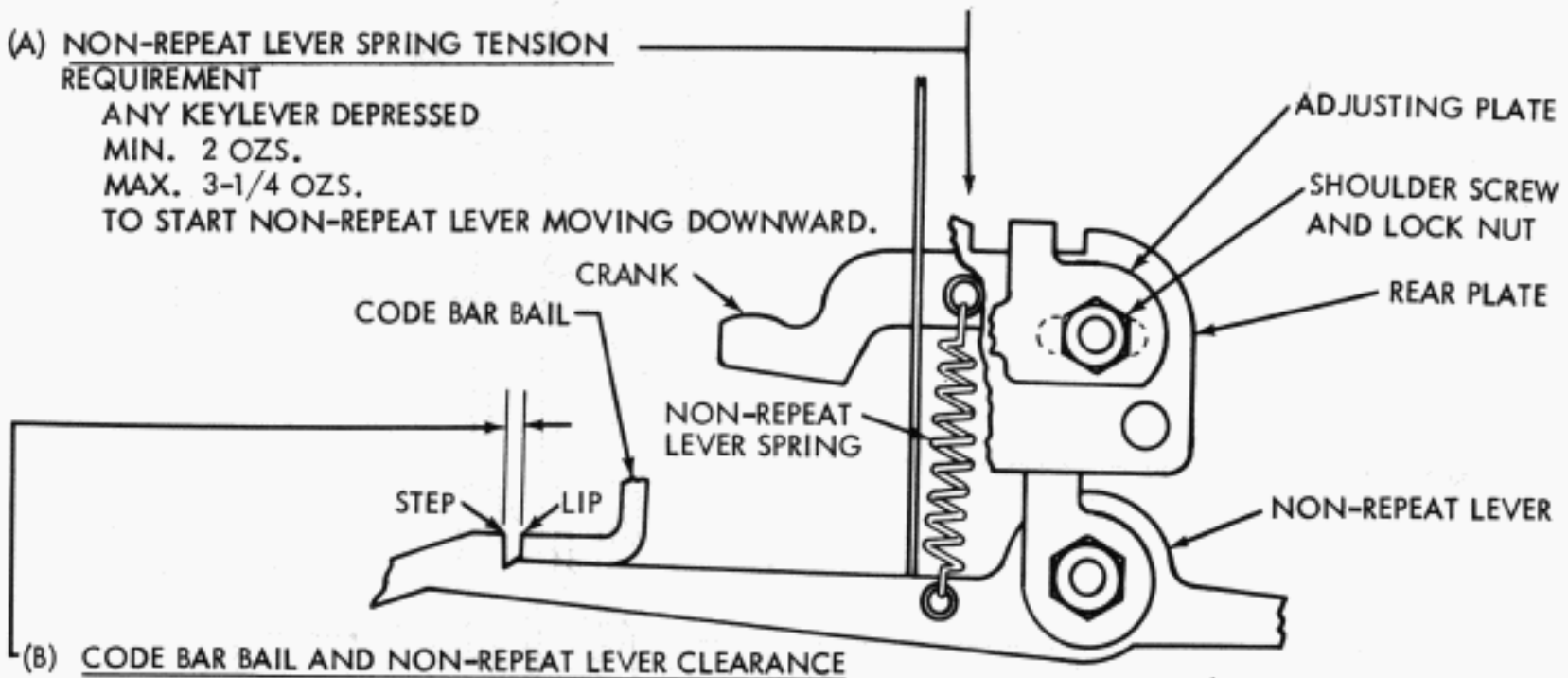

(A) NON-REPEAT LEVER SPRING TENSION
REQUIREMENT
ANY KEYLEVER DEPRESSED
MIN. 2 OZS.
MAX. 3-1/4 OZS.
TO START NON-REPEAT LEVER MOVING DOWNWARD.

(B) CODE BAR BAIL AND NON-REPEAT LEVER CLEARANCE
REQUIREMENT
MECHANISM IN INITIAL TRIP-OFF POSITION, ANY KEY DEPRESSED, NO POWER.
MIN. 0.010 INCH
MAX. 0.020 INCH
BETWEEN LIP OF CODE BAR BAIL AND NON-REPEAT LEVER PICK-UP STEP
TO ADJUST
LOOSEN LOCK NUT AND SHOULDER SCREW AND MOVE MECHANISM LEFT OR RIGHT

FIGURE 4-13A. KEYBOARD, NON-REPEAT LEVER MECHANISM

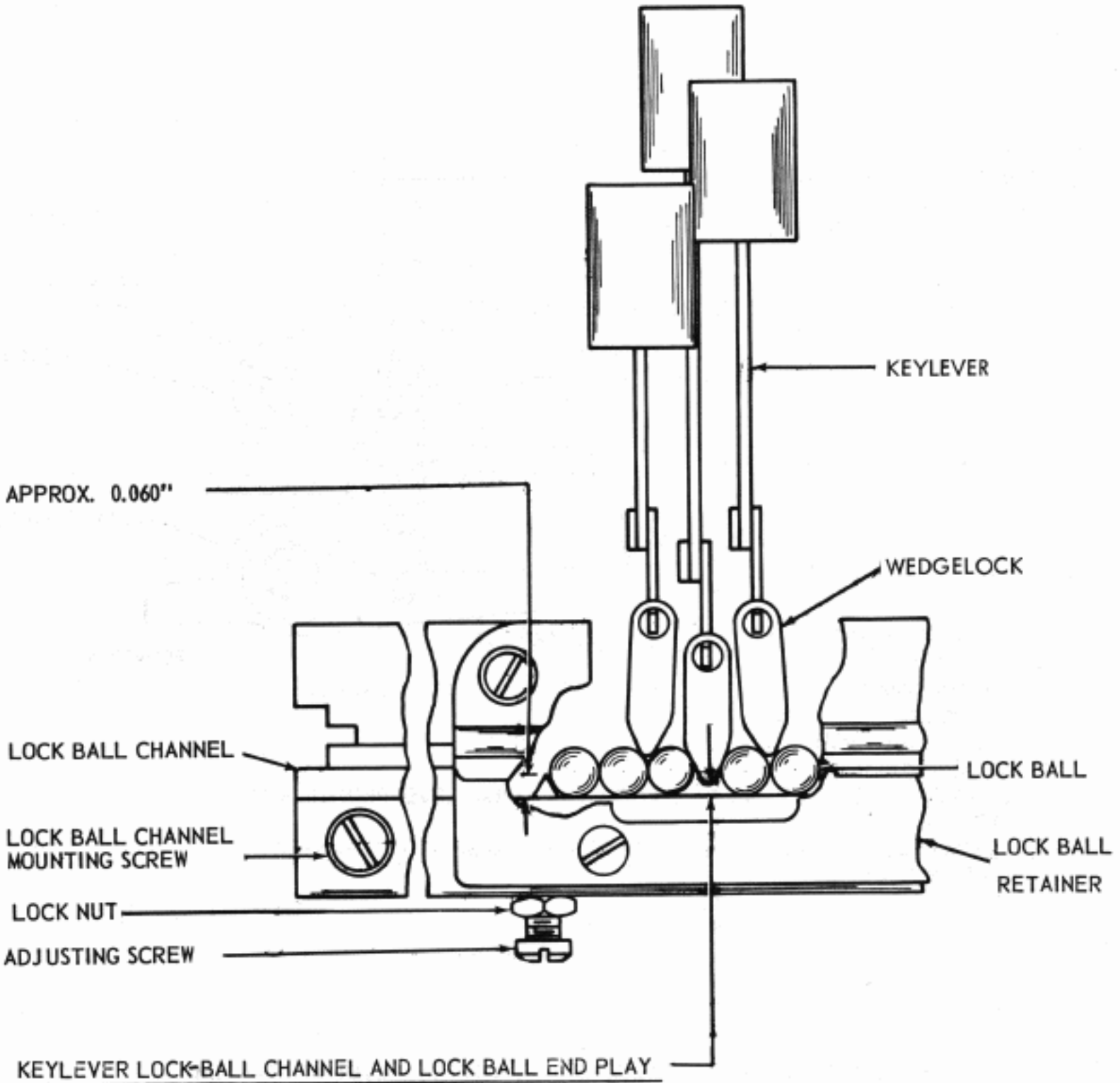

KEYLEVER LOCK-BALL CHANNEL AND LOCK BALL END PLAY

REQUIREMENT

GENERATOR SHAFT ROTATING, CLUTCH SHOULD TRIP CONSISTENTLY WHEN TWO KEYLEVERS ARE DEPRESSED ALTERNATELY. CLUTCH SHOULD NOT TRIP WHEN TWO KEYLEVERS ARE DEPRESSED SIMULTANEOUSLY. WHEN EITHER Q OR P KEYLEVER IS FULLY DEPRESSED, CLEARANCE SHOULD BE

MIN. SOME CLEARANCE

MAX. 0.020 INCH

BETWEEN TIP OF WEDGELOCK AND BOTTOM OF CHANNEL.

TO ADJUST

POSITION CHANNEL WITH MOUNTING SCREWS LOOSENED. POSITION LOCK BALL ADJUSTING SCREW APPROXIMATELY 0.060 INCH ABOVE BOTTOM OF BALL CHANNEL.

FIGURE 4-14 KEYBOARD, KEYLEVER LOCKING MECHANISM

CODE LEVER BAIL LATCH LEVER ECCENTRIC

(1) REQUIREMENT

KEYLEVER WITH SHORTEST DOWNWARD STROKE FULLY DEPRESSED. CLEARANCE BETWEEN FRONT VERTICAL SURFACE OF THE CODE LEVER BAIL EXTENSION AND THE STOP ON THE REAR END OF THE CODE LEVER BAIL LATCH LEVER.

MIN. 0.025 INCH
MAX. 0.040 INCH

(2) REQUIREMENT

GENERATOR CLUTCH DISENGAGED. CLEARANCE BETWEEN CODE LEVER BAIL LATCH LEVER AND THE CODE BAR BAIL LATCH

MIN. 0.005 INCH
MAX. 0.035 INCH

TO ADJUST

ROTATE THE CODE LEVER BAIL LATCH LEVER ECCENTRIC.

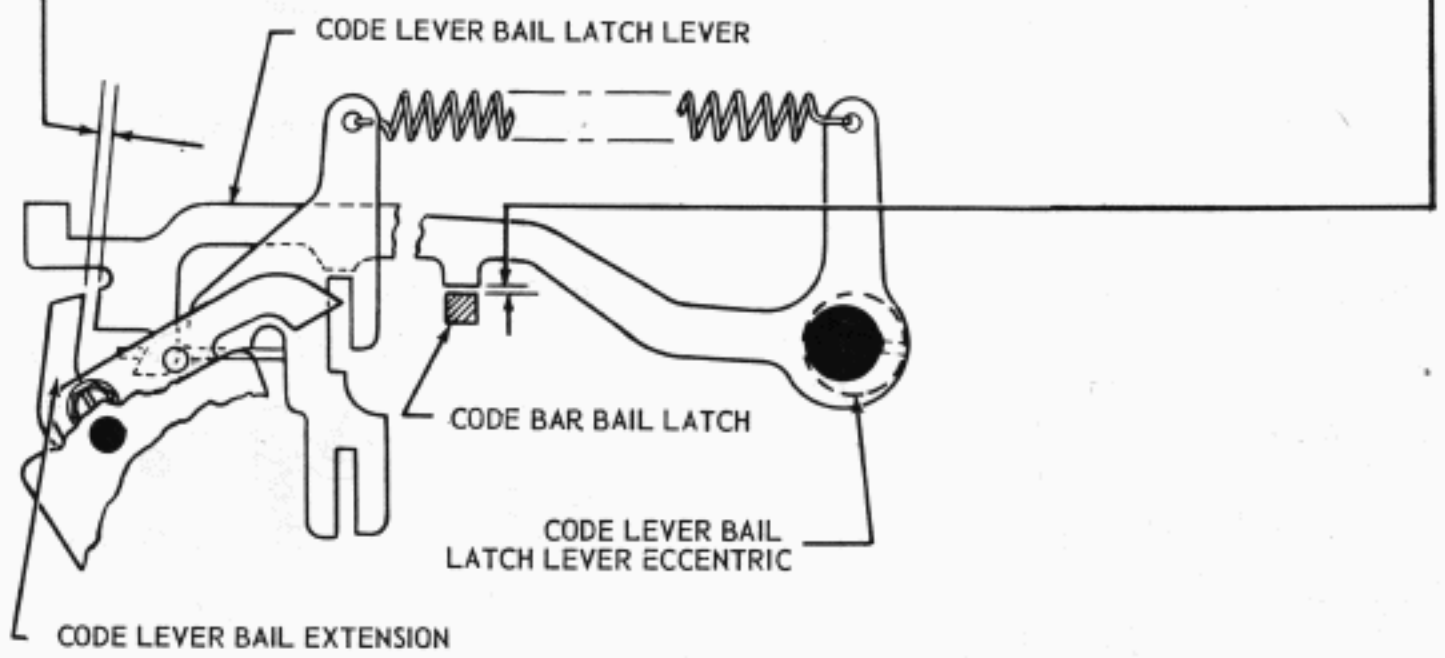

FIGURE 4-15 KEYBOARD, CODE LEVER BAIL LATCH MECHANISM, LEFT SIDE VIEW

CODE LEVER BAIL SPRING TENSION

REQUIREMENT

GENERATOR CLUTCH DISENGAGED.
NON-REPEAT LEVER HELD AWAY.

MIN. 1-3/4 OZS.
MAX. 3 OZS.

TO START THE BAIL MOVING.

CODE BAR GUIDES

REQUIREMENT

CLEARANCE BETWEEN CODE BARS AND CODE BAR GUIDES

MIN. SOME CLEARANCE
MAX. 0.010 INCH

TO ADJUST

POSITION THE TWO CODE BAR GUIDES WITH THEIR MOUNTING SCREWS LOOSENED.

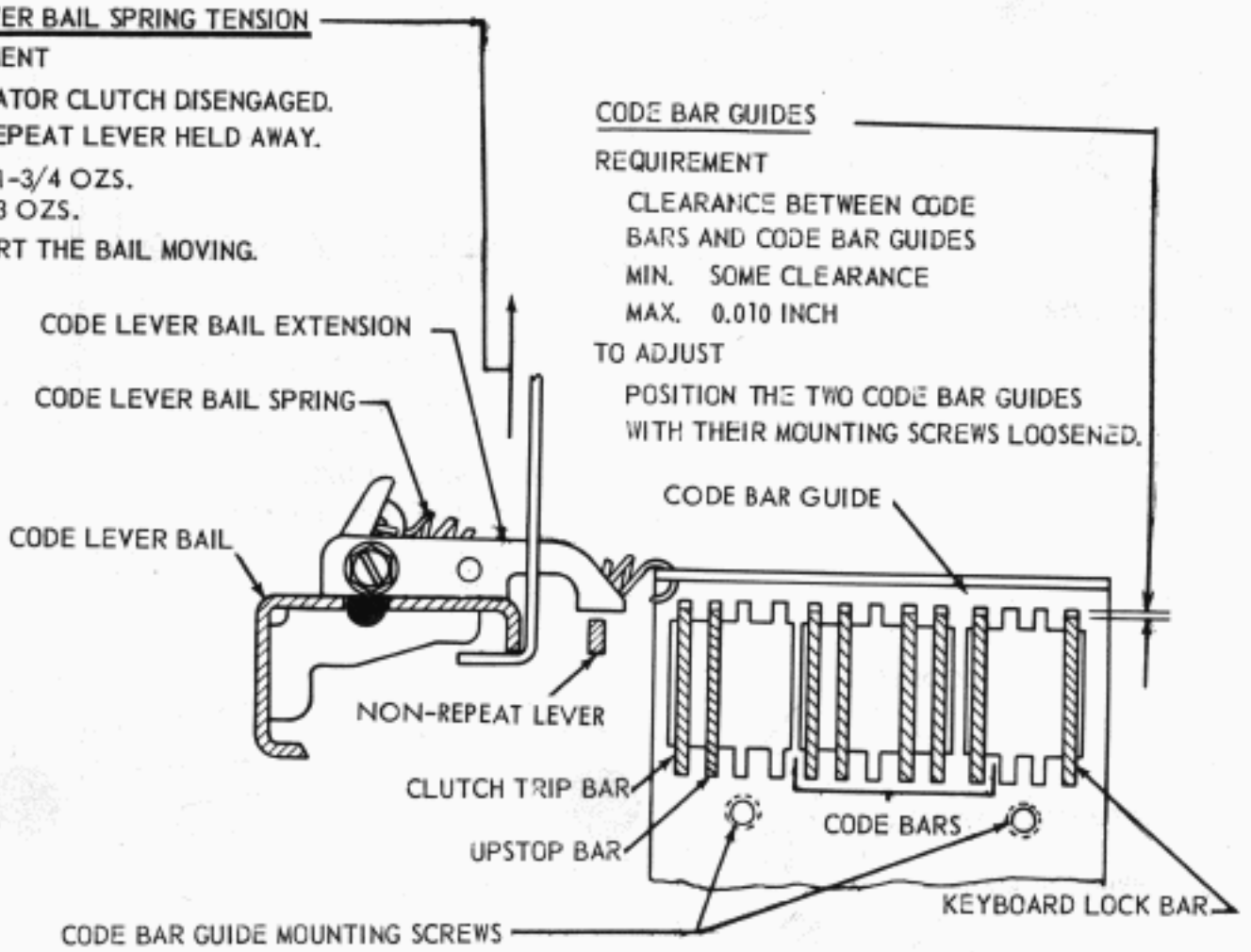

FIGURE 4-16 KEYBOARD, CODE BAR MECHANISM, LEFT SIDE VIEW

CODE LEVER BAIL NON-REPEAT EXTENSION

REQUIREMENT

GENERATOR CLUTCH DISENGAGED. CODE LEVER BAIL ROTATED UNTIL CODE LEVER BAIL LATCH LEVER JUST TRIPS. WITH BAIL LATCHING EXTENSION RESTING AGAINST VERTICAL SURFACE OF LATCH LEVER AND SHAFT ROTATED UNTIL NON-REPEAT LEVER IS FULLY LATCHED ON CODE BAR BAIL EXTENSION

MIN. SOME CLEARANCE

MAX. 0.015 INCH

BETWEEN ADJUSTABLE EXTENSION AND NON-REPEAT LEVER.

TO ADJUST

POSITION ADJUSTABLE EXTENSION WITH CLAMP SCREW LOOSENED.

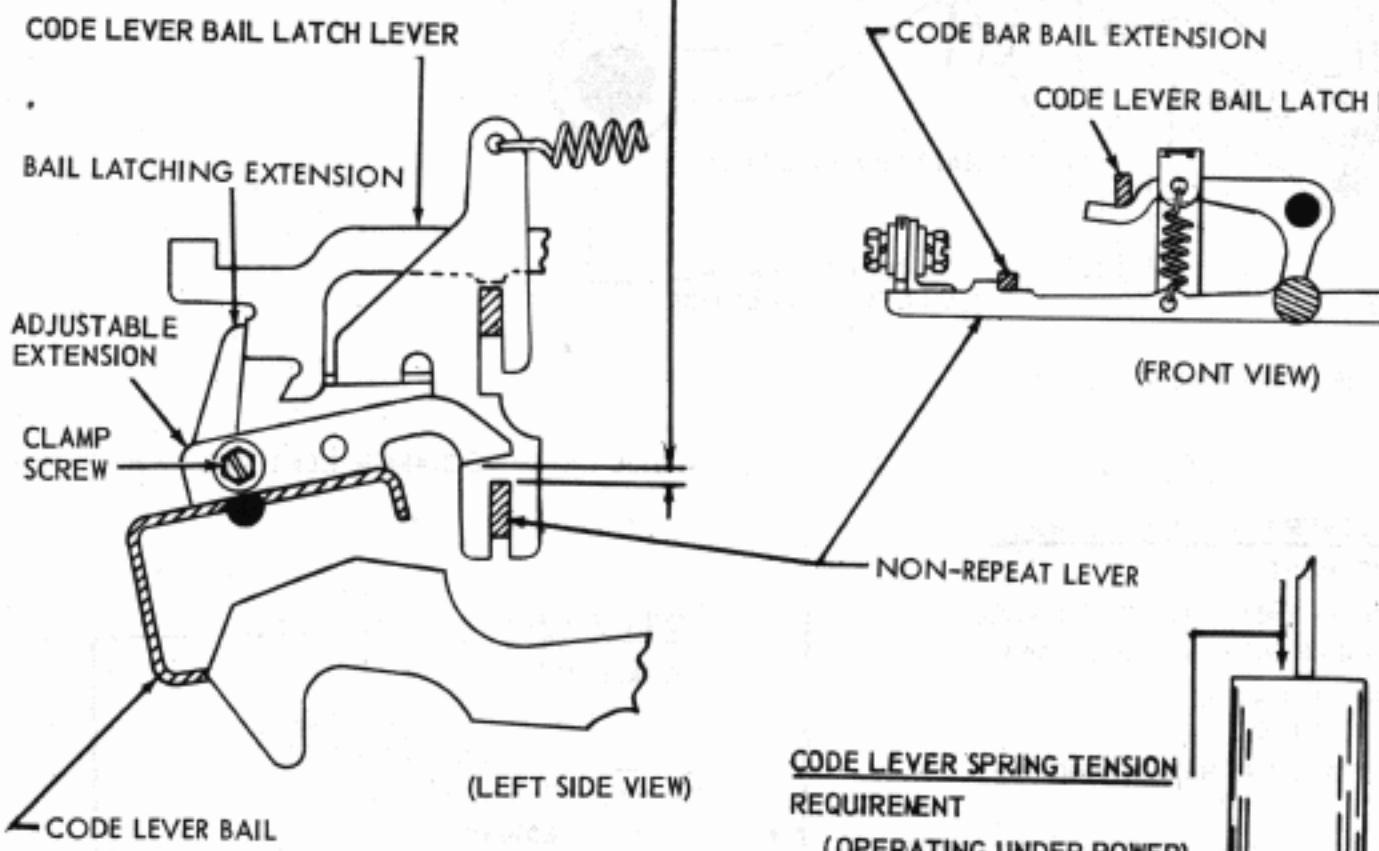

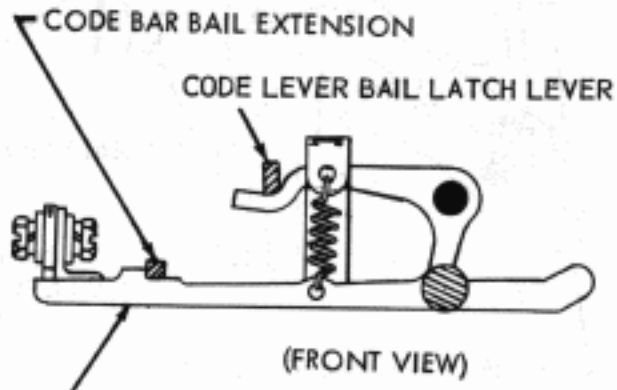

CODE LEVER SPRING TENSION

REQUIREMENT

(OPERATING UNDER POWER) WITH THE GENERATOR CLUTCH DISENGAGED

MIN. 3 1/2 OZS.

MAX. 8 OZS.

TO OPERATE A KEY.

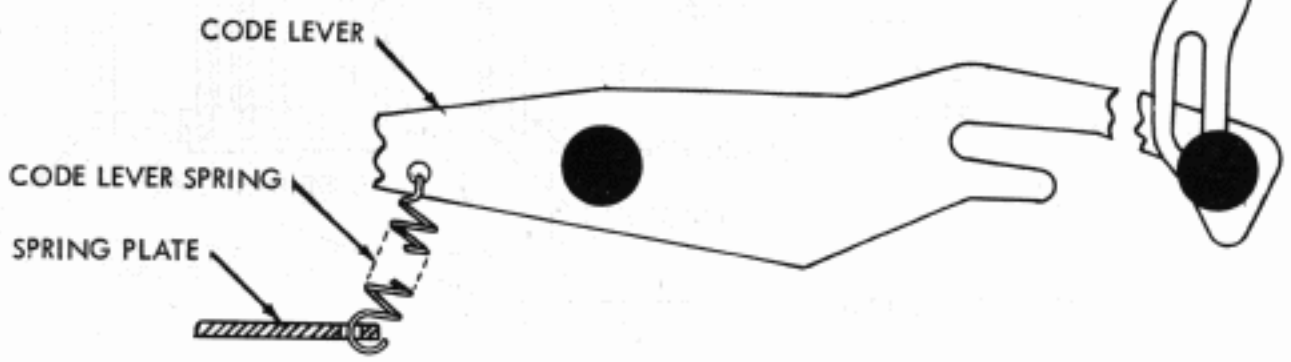

FIGURE 4-17 KEYBOARD, NON-REPEAT MECHANISM

LOCK BAR SPRING TENSION

REQUIREMENT

GENERATOR CLUTCH DISENGAGED.
KEYBOARD LOCK KEY HELD DEPRESSED.
MIN. 5 OZS.
MAX. 9 OZS.
TO START LOCK BAR MOVING.

CODE BAR SPRING TENSION

REQUIREMENT

LETTERS KEYLEVER DEPRESSED.
GENERATOR CLUTCH ENGAGED.
MIN. 3 OZS.
MAX. 4 OZS.
TO START A CODE BAR MOVING.

CLUTCH TRIP BAR SPRING TENSION

REQUIREMENT

LETTERS KEYLEVER DEPRESSED.
GENERATOR CLUTCH ENGAGED
CLUTCH TRIP BAIL EXTENSION HELD AWAY FROM CLUTCH TRIP BAR
MIN 5 OZS.
MAX. 9 OZS.
TO START CLUTCH TFIP BAR (REAR) MOVING.

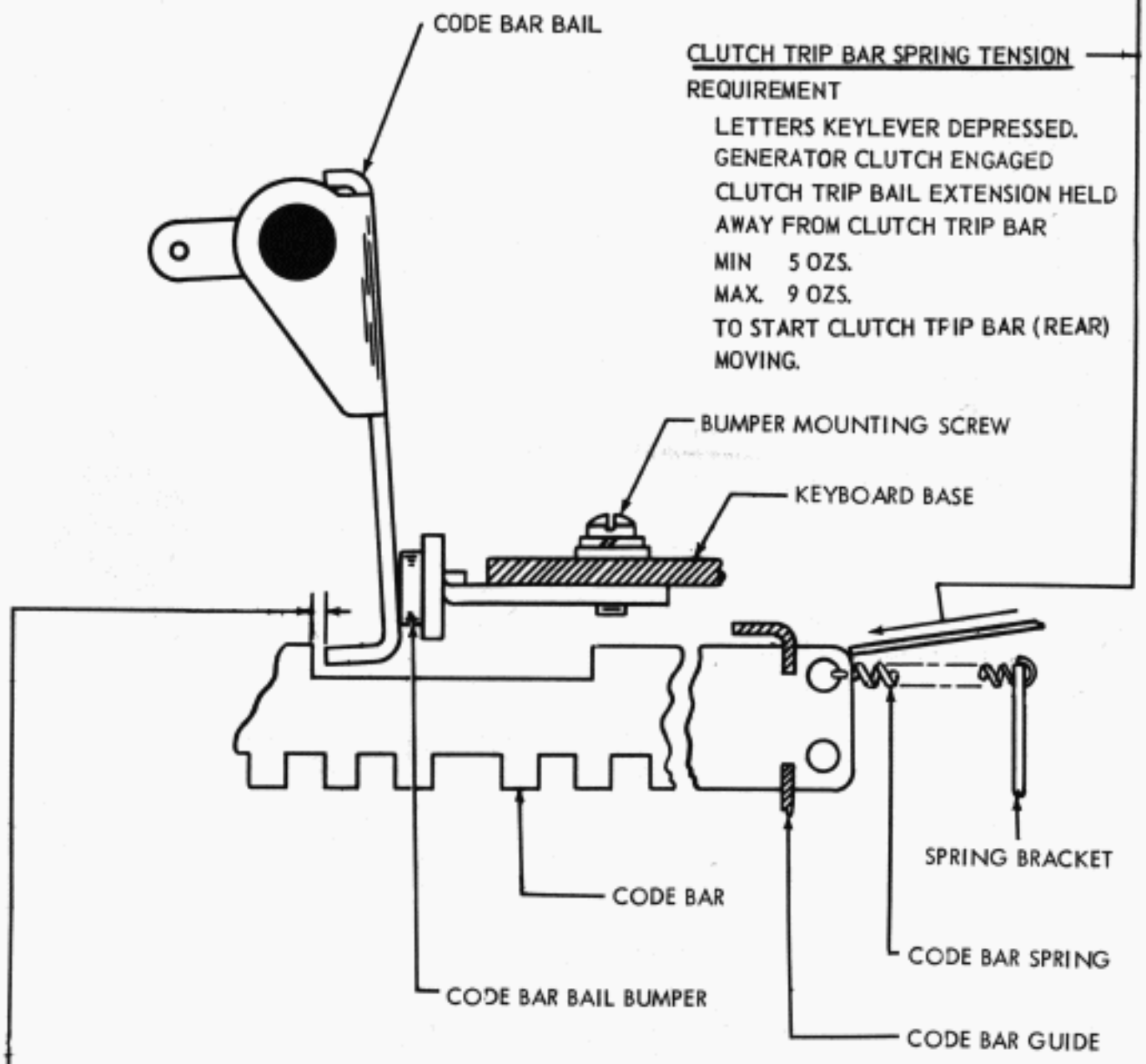

CODE BAR BAIL BUMPER

REQUIREMENT

LETTERS SELECTION APPLIED TO CODE BAR.
CLEARANCE BETWEEN SHOULDER ON CLOSEST CODE BAR AND ENGAGING FACE OF CODE BAR BAIL.
MIN. 0.010 INCH
MAX. 0.020 INCH

TO ADJUST

POSITION BUMPER WITH MOUNTING SCREWS. LOOSENED.

FIGURE 4-18 KEYBOARD, CODE BAR MECHANISM

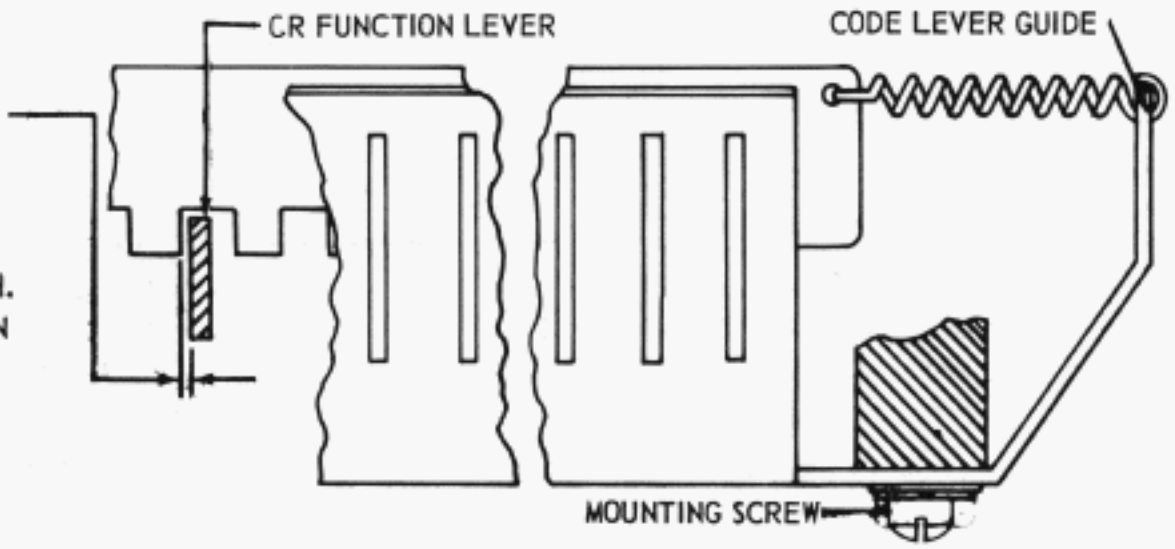

CODE LEVER GUIDE

REQUIREMENT

CR KEYLEVER HELD DEPRESSED WHILE DISENGAGING CLUTCH. CLEARANCE BETWEEN CR FUNCTION LEVER AND STOPPING EDGE OF NUMBER 5 CODE BAR

MIN. 0.005 INCH
MAX. 0.015 INCH

TO ADJUST

POSITION THE CODE LEVER GUIDE WITH ITS FOUR MOUNTING SCREWS LOOSENED.

CODE BAR BOUNCE SUPPRESSOR BRACKET SUPPORT SCREW

REQUIREMENT

GENERATOR CLUTCH DISENGAGED, LETTERS SELECTION APPLIED TO CODE BARS, BOUNCE SUPPRESSOR BAIL HELD AGAINST RESET LEVER WITH PRESSURE OF 3 OZS. APPLIED VERTICALLY TO BAIL BETWEEN NO. 2 AND NO. 3 CODE BAR LATCH, CLEARANCE BETWEEN BOUNCE SUPPRESSOR BAIL AND NO. 5 CODE BAR LATCH SHOULD BE

MIN. SOME CLEARANCE
MAX. 0.015 INCH

TO ADJUST

POSITION SUPPORT SCREW WITH ITS LOCK NUT LOOSENED

CODE BAR LATCH SPRING

REQUIREMENT

GENERATOR CLUTCH COMPLETELY DISENGAGED

MIN. 1/4 OZ.
MAX. 1 1/4 OZS.
TO START LATCH MOVING.

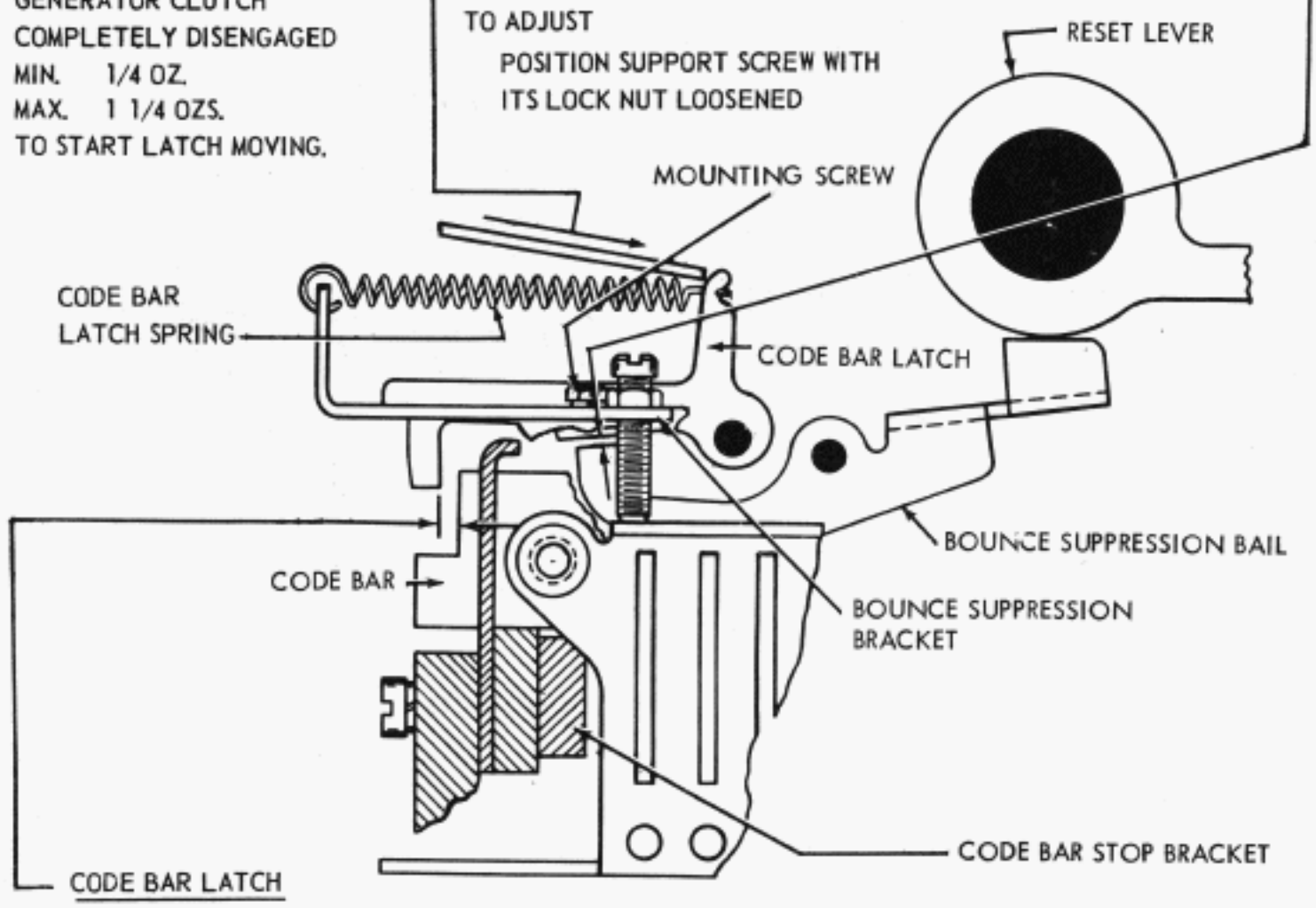

CODE BAR LATCH

(1) REQUIREMENT

LETTERS SELECTION APPLIED TO THE CODE BARS AND THE CODE BARS AGAINST THEIR STOP. CLEARANCE BETWEEN CODE BAR AND LATCH

MIN. 0.010 INCH
MAX. 0.025 INCH

(2) REQUIREMENT

BOUNCE SUPPRESSOR BAIL SHOULD RIDE CENTRALLY ON RESET LEVER.

TO ADJUST

POSITION BOUNCE SUPPRESSOR BRACKET WITH MOUNTING SCREWS LOOSENED.

FIGURE 4-19 KEYBOARD, CODE BAR MECHANISM, FRONT VIEW

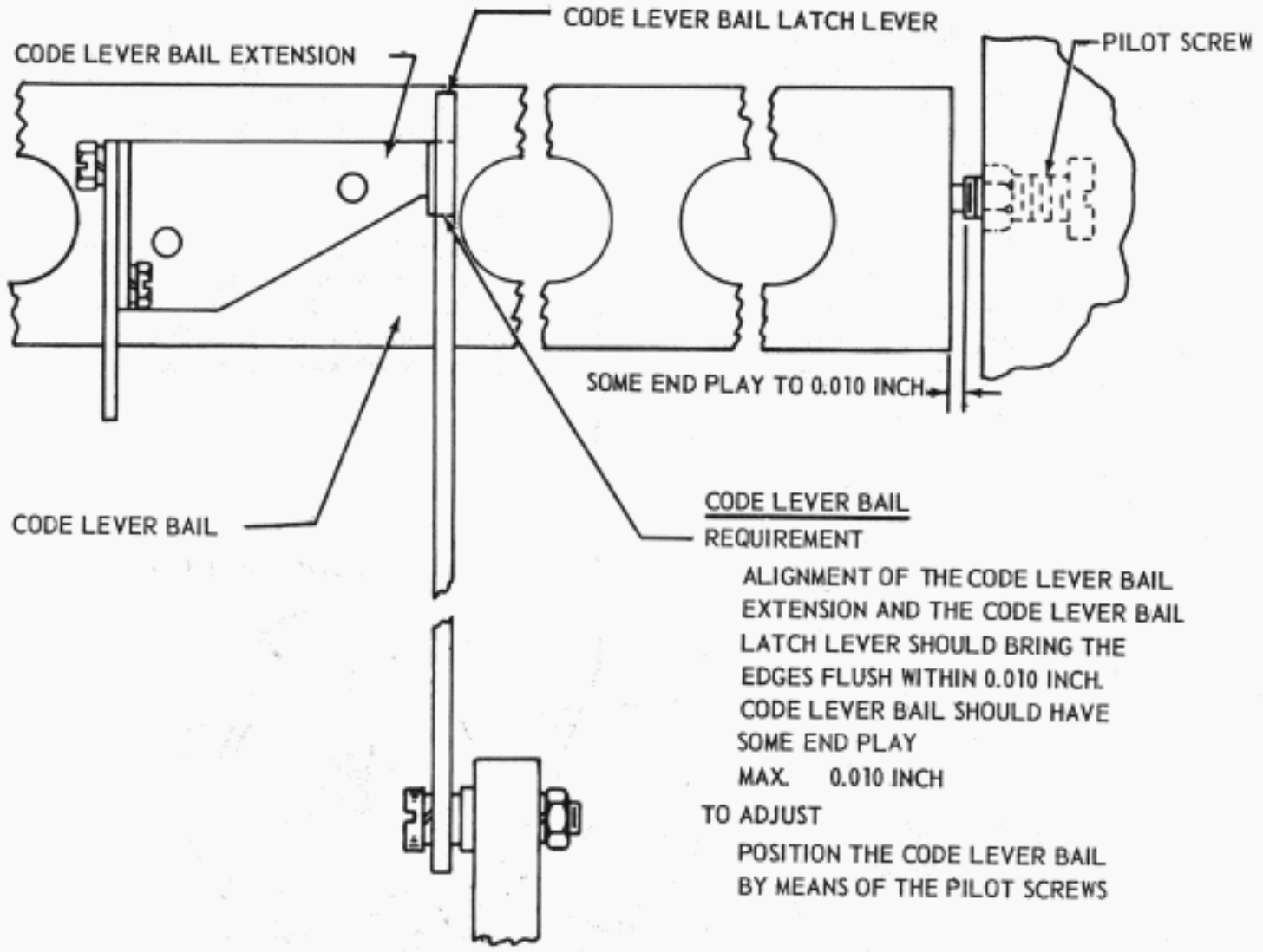

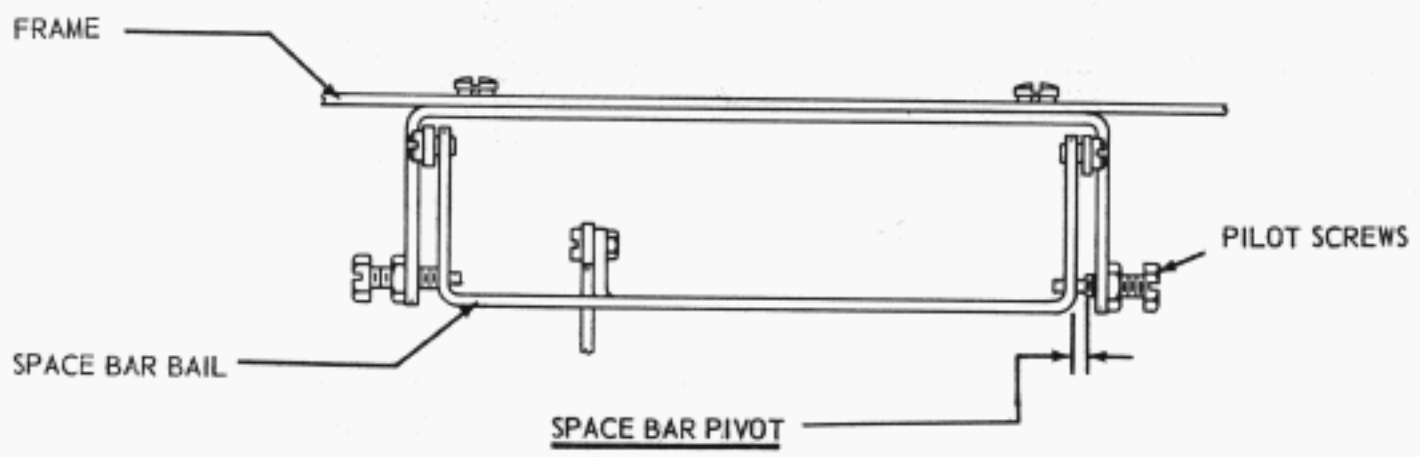

FIGURE 4-20 KEYBOARD, CODE LEVER BAIL , SPACE BAR

(A) INTERMEDIATE GEAR BRACKET

(1) REQUIREMENT

THERE SHOULD BE A BARELY PERCEPTIBLE AMOUNT OF BACKLASH BETWEEN THE TYPING UNIT DRIVEN GEAR AND THE TYPING UNIT DRIVING GEAR AT THE POINT WHERE BACKLASH IS THE LEAST

TO ADJUST

POSITION THE COMPLETE INTERMEDIATE GEAR MECHANISM BRACKET BY UTILIZING THE ADJUSTING SLOTS WITH THE THREE HEXAGON HEAD SCREWS LOOSENED. ALIGN THE GEARS AT THIS TIME

(2) REQUIREMENT

THERE SHOULD BE A BARELY PERCEPTIBLE AMOUNT OF BACKLASH BETWEEN THE INTERMEDIATE DRIVING GEAR AND THE INTERMEDIATE DRIVEN GEAR AT THE POINT WHERE THE BACKLASH IS THE LEAST.

TO ADJUST

RAISE OR LOWER THE FRONT END OF THE INTERMEDIATE GEAR BRACKET BY MEANS OF THE FILISTER HEAD ADJUSTING AND CLAMPING SCREWS LOCATED AT THE FRONT END OF THE BRACKET. REFINE REQUIREMENTS IF NECESSARY

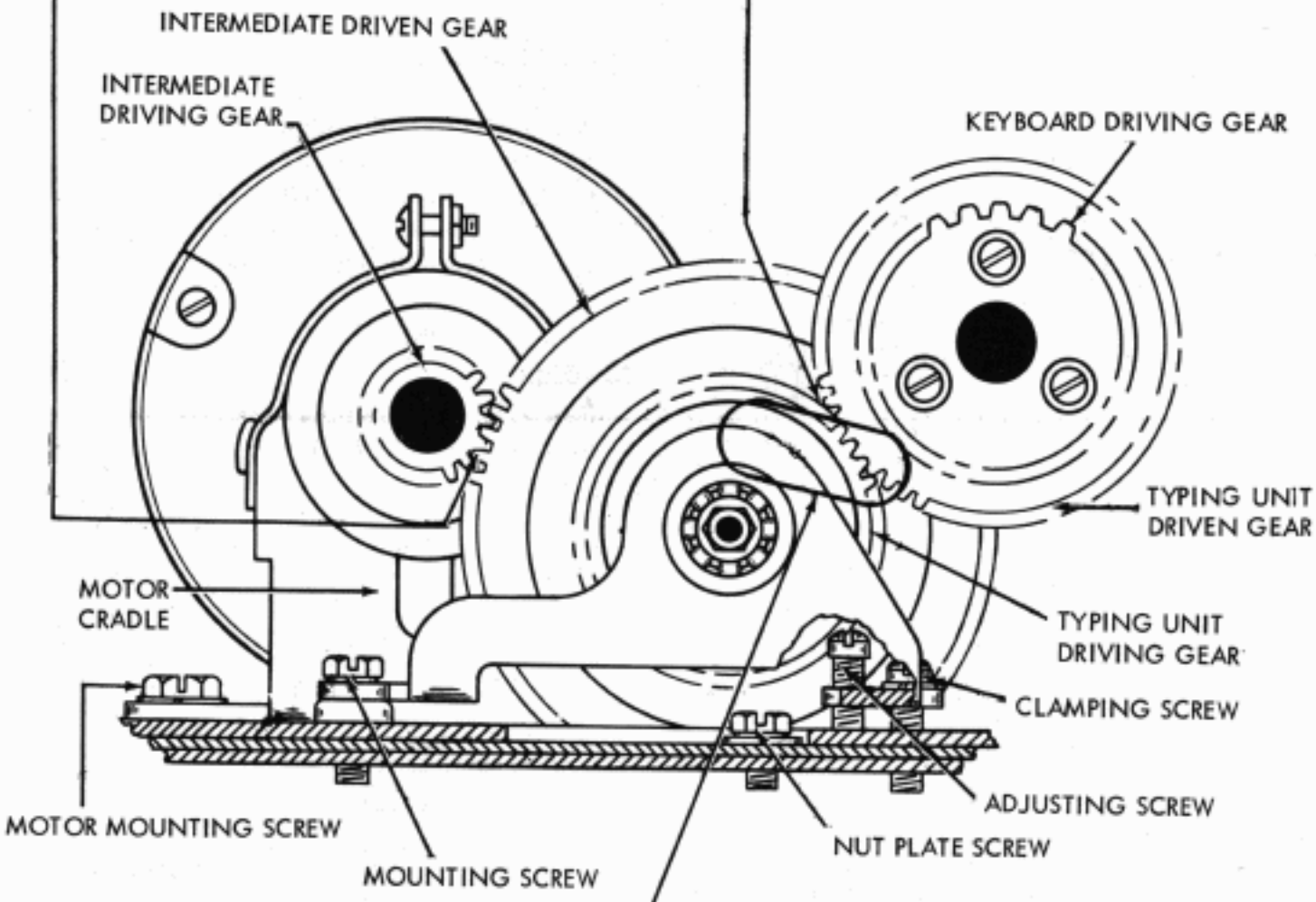

NOTE: OVERLOAD MECHANISM SPRING ADJUSTMENT APPLIES ONLY TO UNITS SO EQUIPPED

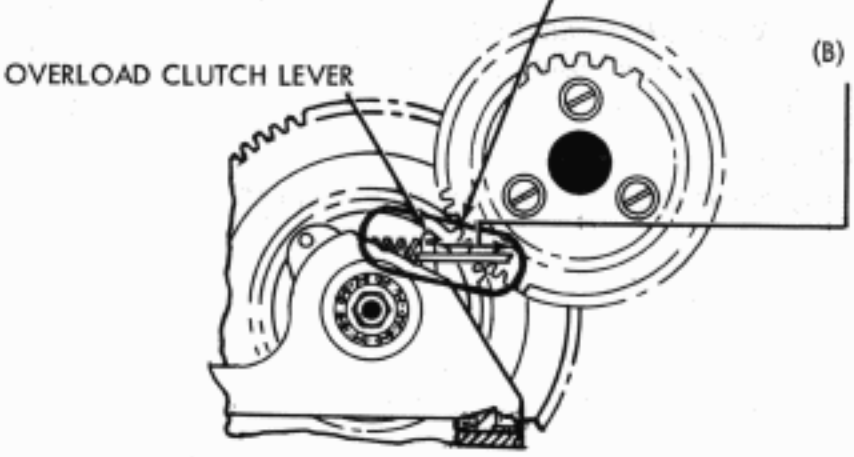

(B) OVERLOAD MECHANISM SPRING

REQUIREMENT

OVERLOAD CLUTCH LEVER IN ITS NOTCH

MIN. 40 OZS.

MAX. 64 OZS.

TO START LEVER MOVING

LEVER MUST NOT JUMP FROM NOTCH WITH LESS THAN 64 OZS.

FIGURE 4-21 KEYBOARD OR BASE, MOTOR, AND TYPING UNIT GEARING, LEFT SIDE VIEW

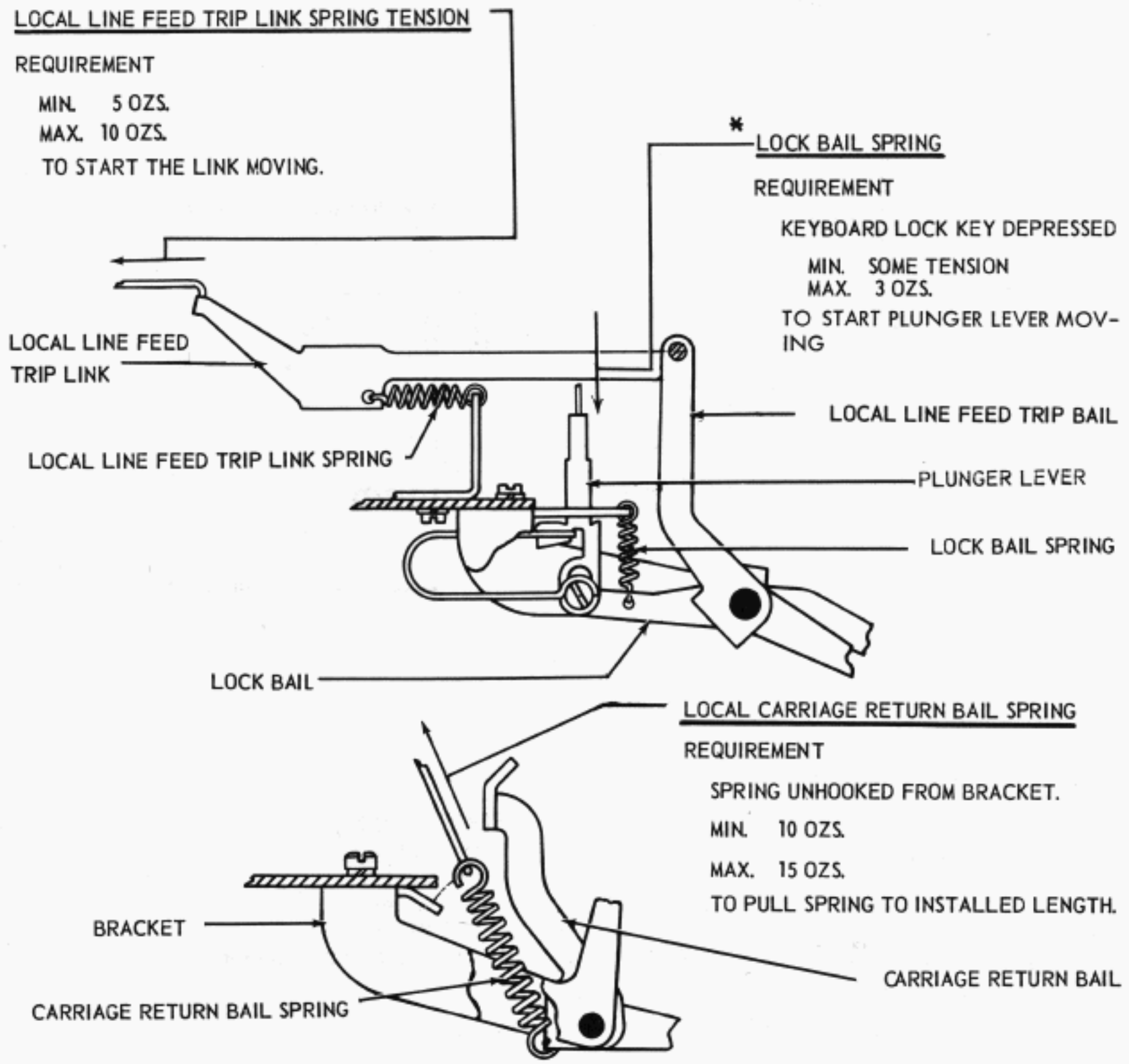

* APPLIES TO KEYBOARD ONLY

FIGURE 4-22 KEYBOARD LOCK, LOCAL LINE FEED, AND CARRIAGE RETURN MECHANISM, LEFT SIDE VIEW.

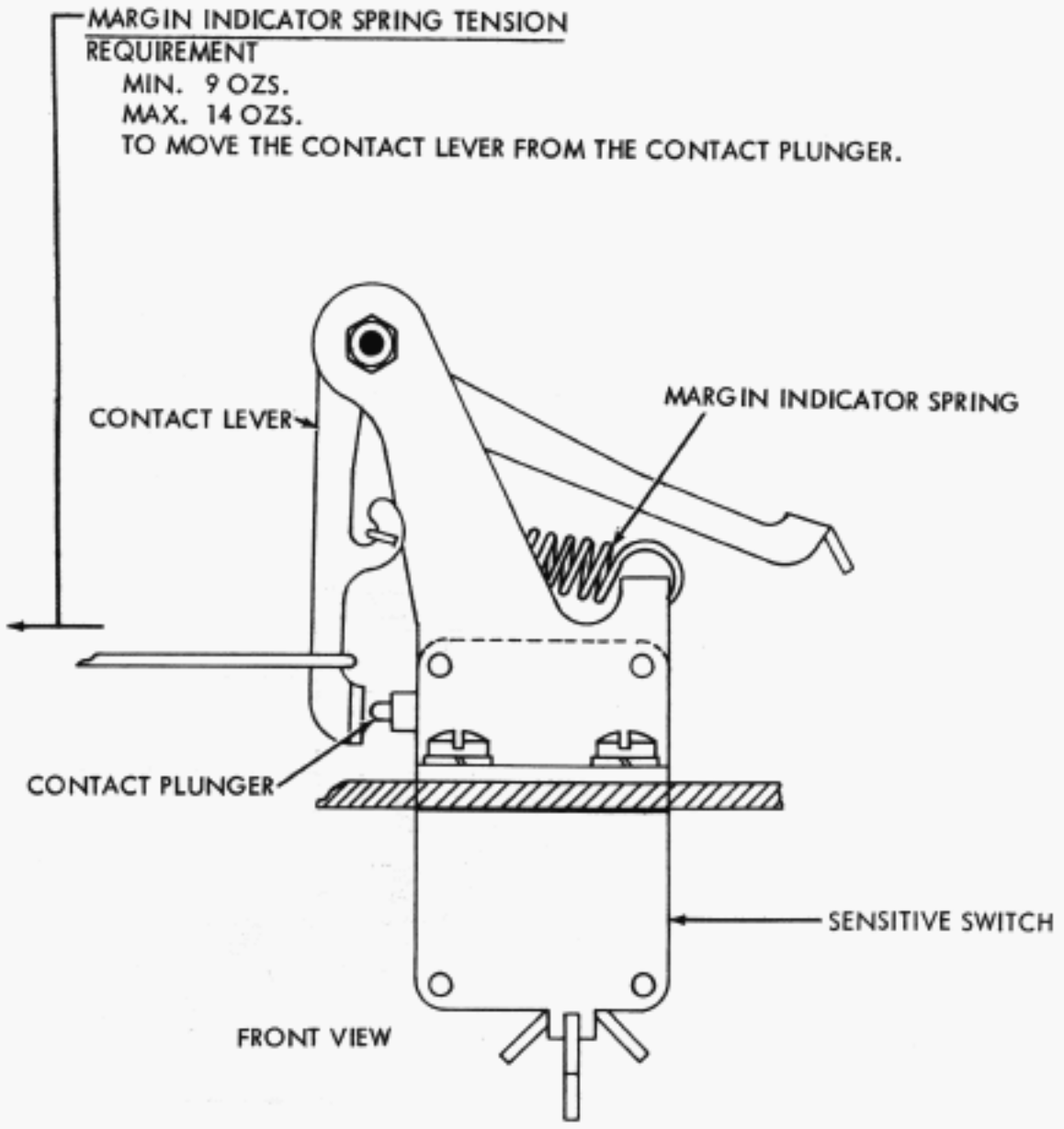

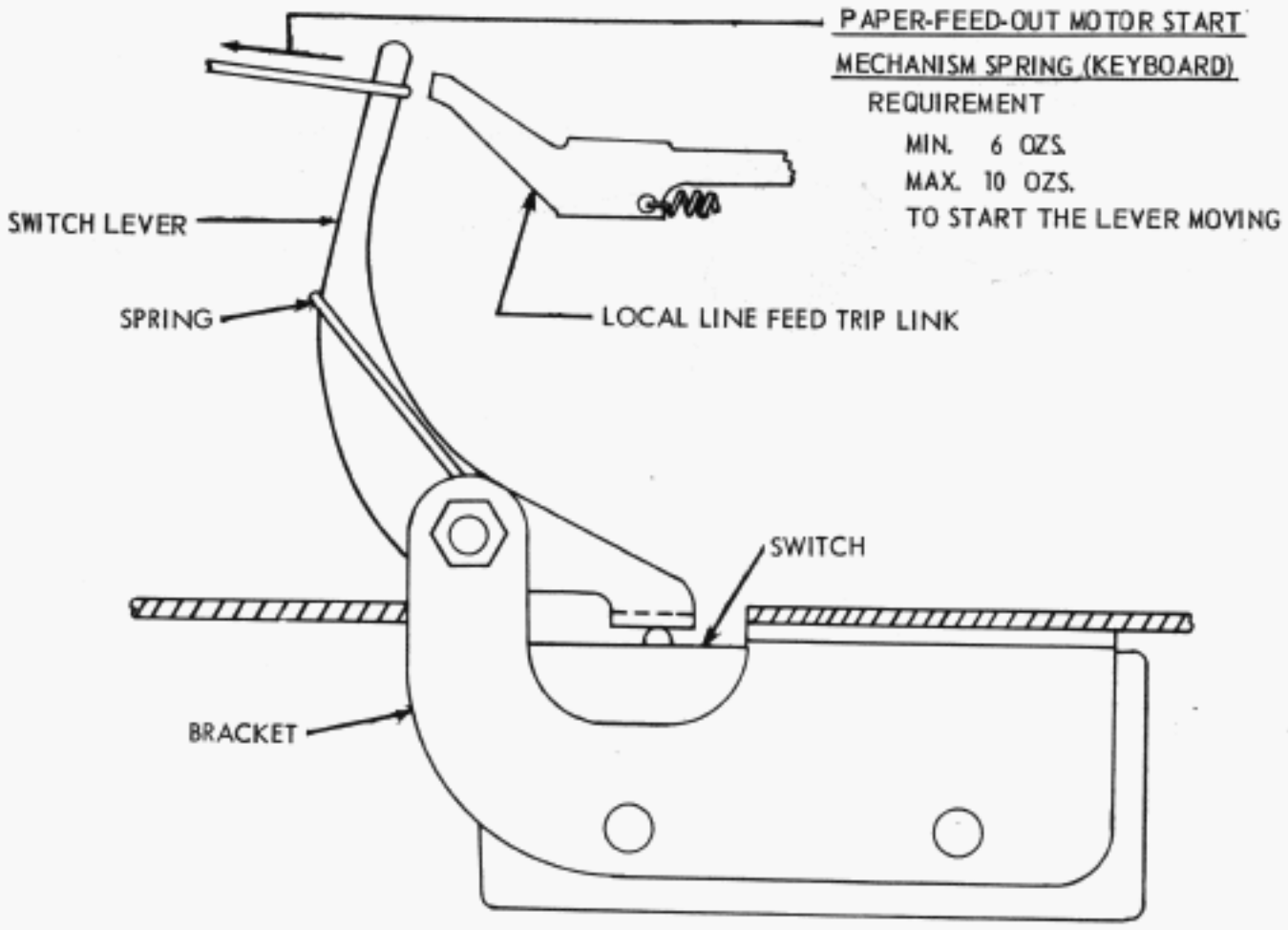

FIGURE 4-23 KEYBOARD, MARGIN INDICATING AND PAPER FEED-OUT MECHANISMS

2. TYPING UNIT

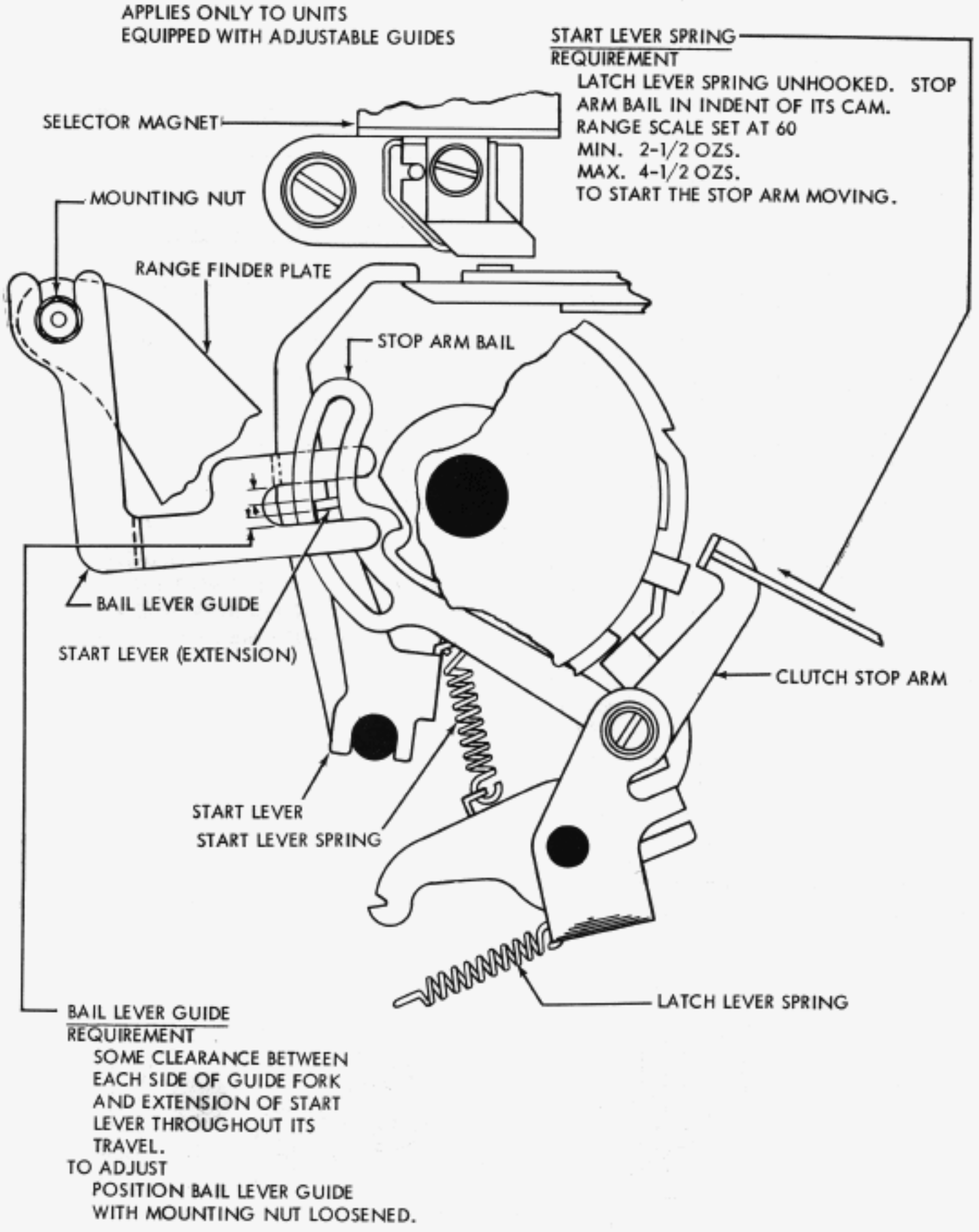

FIGURE 4-24 TYPING UNIT, SELECTOR CLUTCH MECHANISM, RIGHT SIDE VIEW

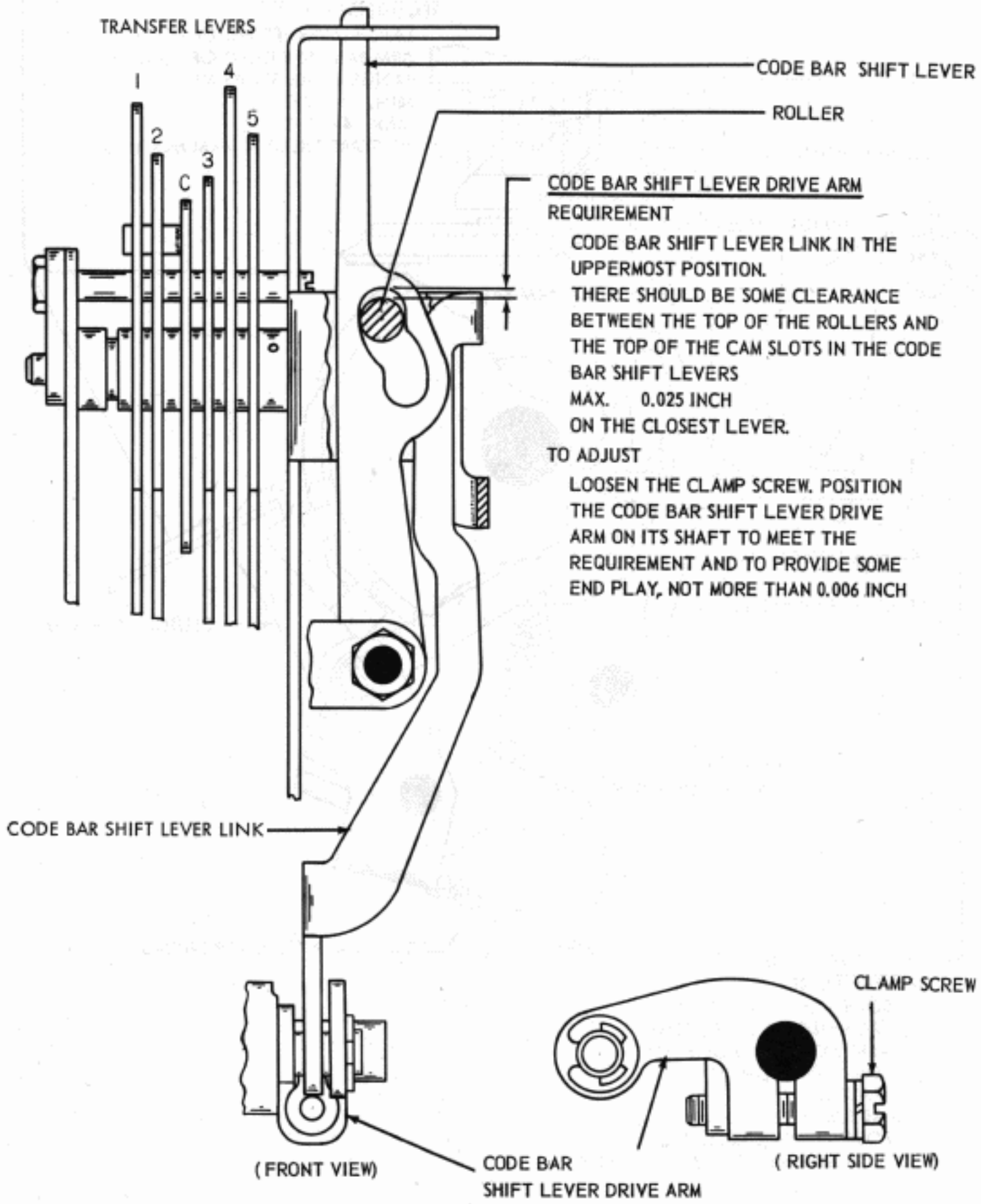

FIGURE 4-25 TYPING UNIT, CODE BAR SHIFT MECHANISM

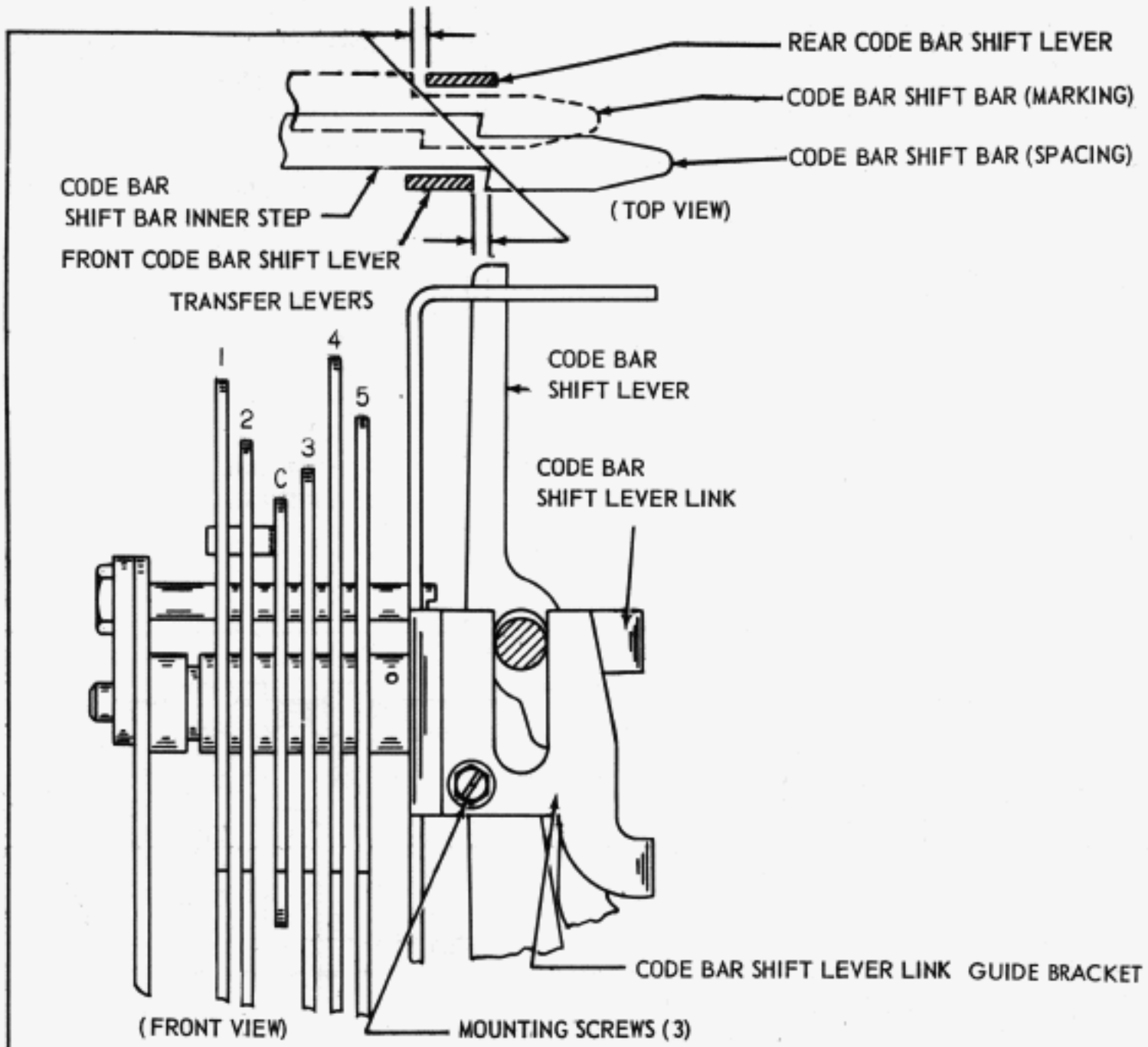

CODE BAR SHIFT LEVER LINK GUIDE BRACKET

REQUIREMENT

MOTION OF FRONT AND REAR CODE BAR SHIFT LEVERS SHOULD BE EQUALIZED WITH RESPECT TO CODE BAR TRAVEL.

TO CHECK (FRONT)

SELECT BLANK COMBINATION AND ROTATE MAIN SHAFT UNTIL CODE BAR SHIFT LEVER LINK REACHES HIGHEST TRAVEL. TAKE UP PLAY FOR MAXIMUM CLEARANCE. CLEARANCE BETWEEN FRONT CODE BAR SHIFT LEVER AND SHOULDER ON NEAREST CODE BAR SHIFT BAR.

MIN. 0.002 INCH
MAX. 0.025 INCH

TO CHECK (REAR)

SELECT LETTERS COMBINATION. CHECK CLEARANCE BETWEEN REAR CODE BAR SHIFT LEVER AND SHOULDER OF CODE BAR SHIFT BAR IN SAME WAY.

MIN. 0.002 INCH
MAX. 0.025 INCH

TO ADJUST

POSITION CODE BAR SHIFT LEVER LINK GUIDE BRACKET BY MEANS OF MOUNTING SCREWS (3).

FIGURE 4-26 TYPING UNIT, CODE BAR SHIFT MECHANISM

(A) CLUTCH TRIP SHAFT SET COLLARS

(1) REQUIREMENT

SPACING CLUTCH LATCH LEVER SHOULD HAVE SIDE PLAY

MIN. SOME

MAX. 0.008 INCH

TO ADJUST

POSITION SPACING CLUTCH LATCH LEVER SET COLLAR.

(2) REQUIREMENT

APPROXIMATE ALIGNMENT OF RIGHT END OF STOP EXTENSIONS ON TRIP LEVER AND SHOE LEVER

TO ADJUST

POSITION LINE FEED CLUTCH TRIP LEVER SET COLLAR.

(3) REQUIREMENT

LINE FEED CLUTCH LATCH LEVER SHOULD HAVE SIDE PLAY

MIN. SOME

MAX. 0.008 INCH

TO ADJUST

POSITION LINE FEED CLUTCH LATCH LEVER SET COLLAR

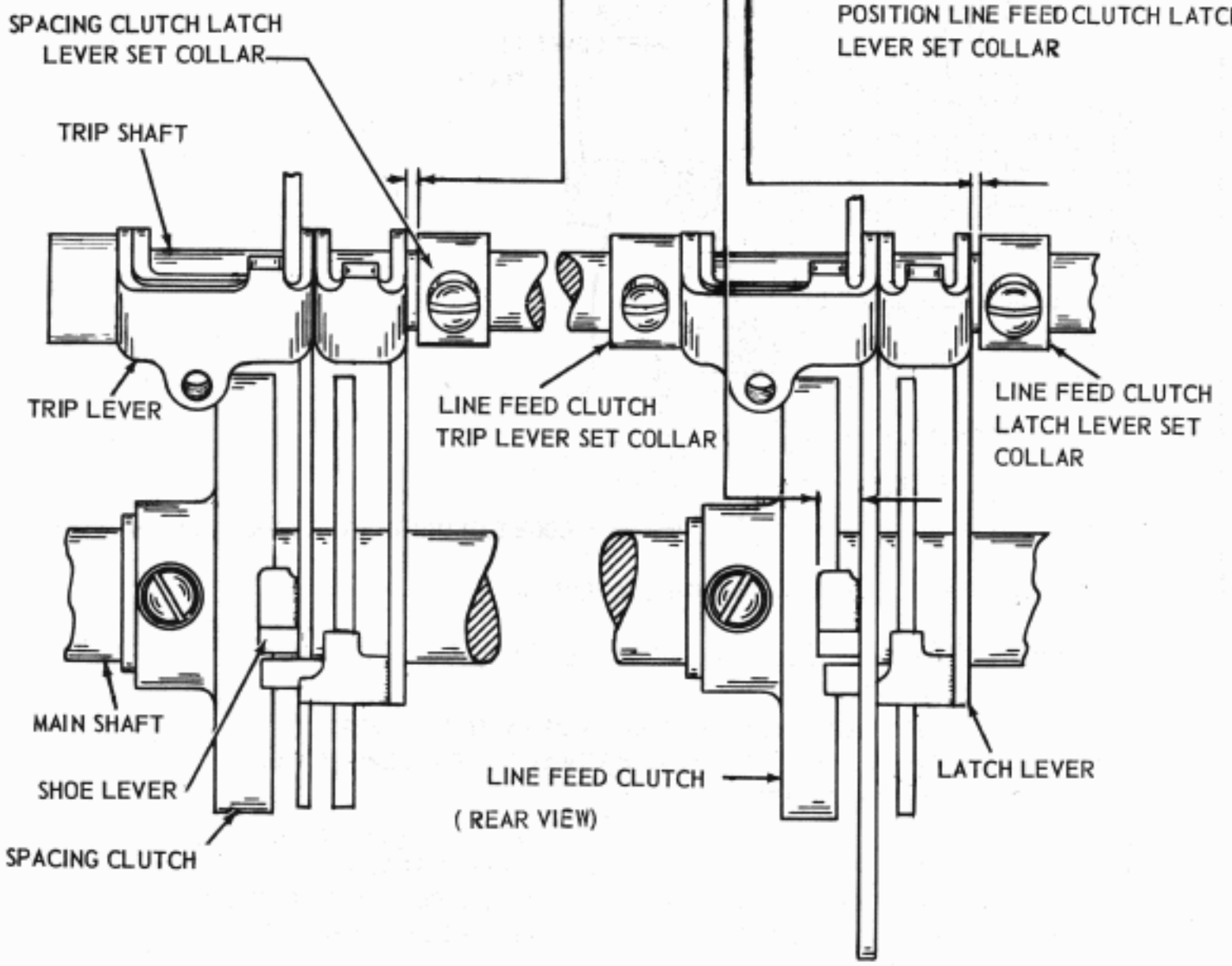

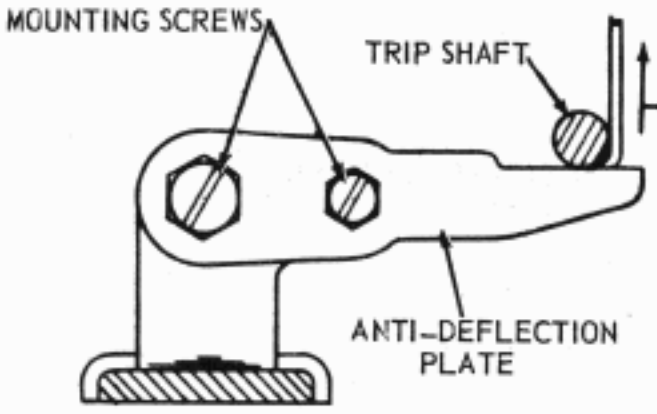

(LEFT SIDE VIEW, UPSIDE DOWN)

NOTE: ANTI-DEFLECTION PLATE ADJUSTMENT APPLIES ONLY TO UNITS SO EQUIPPED.

(B)

ANTI-DEFLECTION PLATE

REQUIREMENT

WITH TYPING UNIT UPSIDE DOWN AND FUNCTION, SPACING, LINE FEED, AND TYPE BOX CLUTCHES LATCHED DISENGAGED.

MIN. 1 LB. MAX. 5 LBS.

TO PULL TRIP SHAFT AWAY FROM ANTIDEFLECTION PLATE.

TO ADJUST

POSITION PLATE WITH MOUNTING SCREWS LOOSENED.

FIGURE 4-26A. TYPING UNIT, TRIP SHAFT MECHANISM

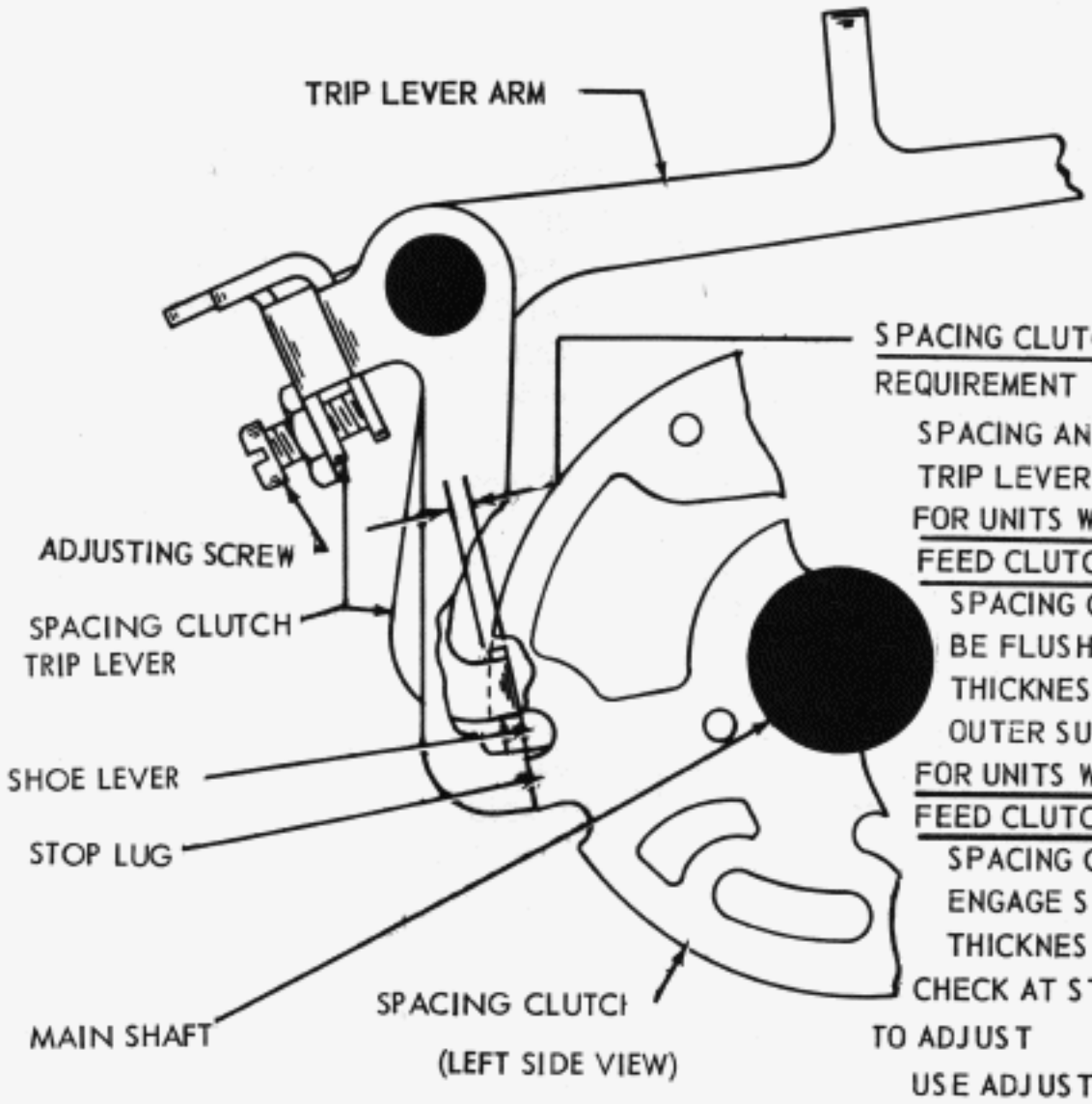

SPACING CLUTCH TRIP LEVER

REQUIREMENT

SPACING AND TYPE BOX CLUTCHES DISENGAGED TRIP LEVER ARM IN UPWARD POSITION.

FOR UNITS WITHOUT U-SHAPED LINE FEED CLUTCH TRIP LEVER:

SPACING CLUTCH TRIP LEVER SHOULD BE FLUSH OR UNDERFLUSH BY 1/2 THICKNESS OF SHOE LEVER WITH OUTER SURFACE OF SHOE LEVER.

FOR UNITS WITH U-SHAPED LINE FEED CLUTCH TRIP LEVER:

SPACING CLUTCH TRIP LEVER SHOULD ENGAGE SHOE LEVER BY FULL THICKNESS OF SHOE LEVER

CHECK AT STOP LUG WITH LEAST BITE.

TO ADJUST

USE ADJUSTING SCREW TO POSITION SPACING CLUTCH TRIP ARM.

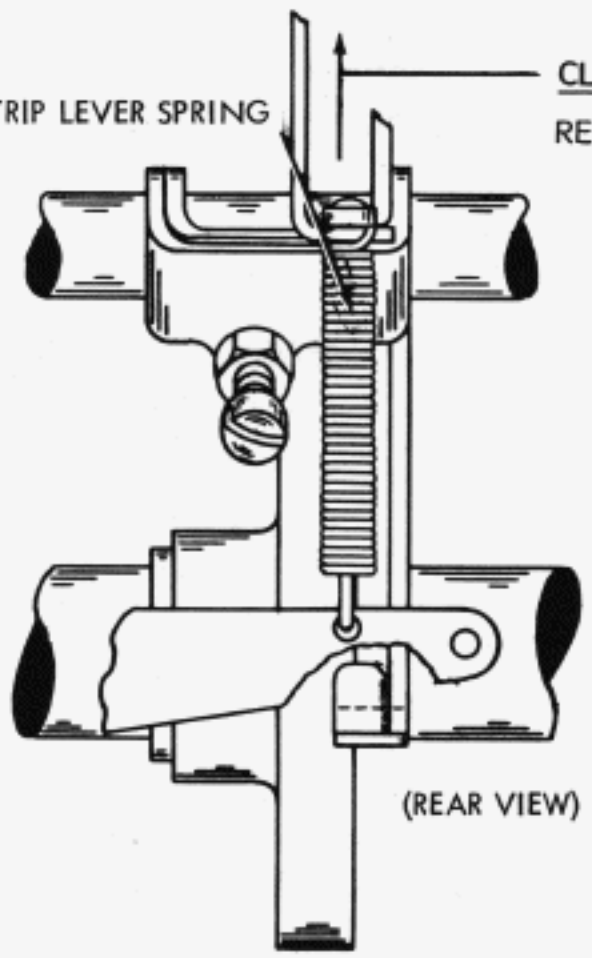

CLUTCH TRIP LEVER SPRING TENSION

REQUIREMENT

CLUTCH ENGAGED AND ROTATED UNTIL TRIP LEVER RESTS ON STOP LUG.

CLUTCH	MIN.	MAX.
SPACING	11 OZS.	16 OZS.
LINE FEED	9 OZS.	12 OZS.
TYPE BOX	5 OZS.	7-1/4 OZS.

TO MOVE LEVER AWAY FROM STOP LUG.

FIGURE 4-26B. TYPING UNIT, SPACING CLUTCH MECHANISM

NOTE: CHECK RELATED ADJUSTMENTS, FIGURES 4-31, 4-32, 1-57, IF THE FOLLOWING ADJUSTMENTS ARE REMADE.

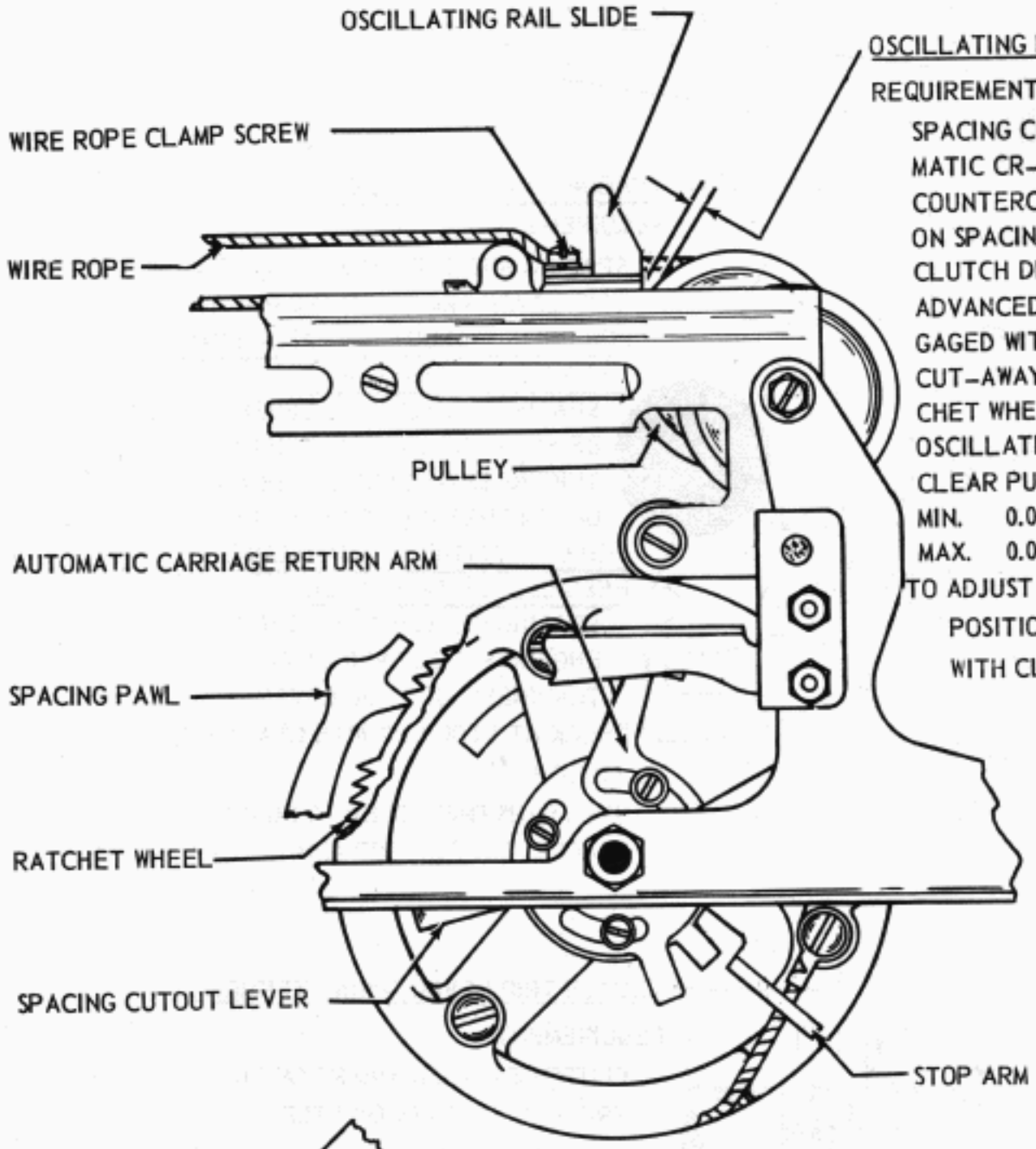

OSCILLATING RAIL SLIDE POSITION

REQUIREMENT

SPACING CUTOUT LEVER AND AUTOMATIC CR-LF ARM IN MAXIMUM COUNTERCLOCKWISE POSITION ON SPACING DRUM. SPACING CLUTCH DISENGAGED. FARTHEST ADVANCED SPACING PAWL ENGAGED WITH TOOTH JUST ABOVE CUT-AWAY SECTION IN RATCHET WHEEL. RIGHT END OF OSCILLATING RAIL SLIDE SHOULD CLEAR PULLEY

MIN. 0.025 INCH
MAX. 0.050 INCH

TO ADJUST

POSITION SLIDE ON WIRE ROPE WITH CLAMP SCREWS LOOSENED.

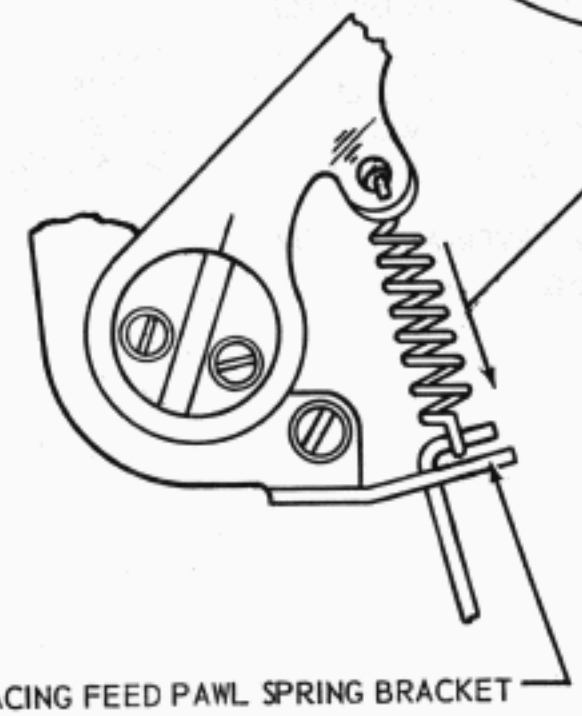

SPACING FEED PAWL SPRING TENSION

REQUIREMENT

EACH SPACING PAWL IN LEAST ADVANCED POSITION, RESTING AGAINST RACHET WHEEL. EACH SPRING UNHOOKED FROM BRACKET

MIN. 2 1/2 OZS.
MAX. 4 OZS.

TO PULL SPRINGS TO INSTALLED LENGTH.

NOTE:
ON UNITS EQUIPPED FOR 6 SPACES PER INCH, THIS TENSION SHOULD BE
MIN. 8 OZS.
MAX. 10 OZS.
TO PULL SPRINGS TO INSTALLED LENGTH.

FIGURE 4-27. TYPING UNIT, SPACING MECHANISM

NOTE: 1. THIS ADJUSTMENT APPLIES ONLY TO UNITS WITH NON-ADJUSTABLE GUIDE PLATES
2. FOR UNITS WITH ADJUSTABLE GUIDE PLATES SEE FIGURE 1-43.

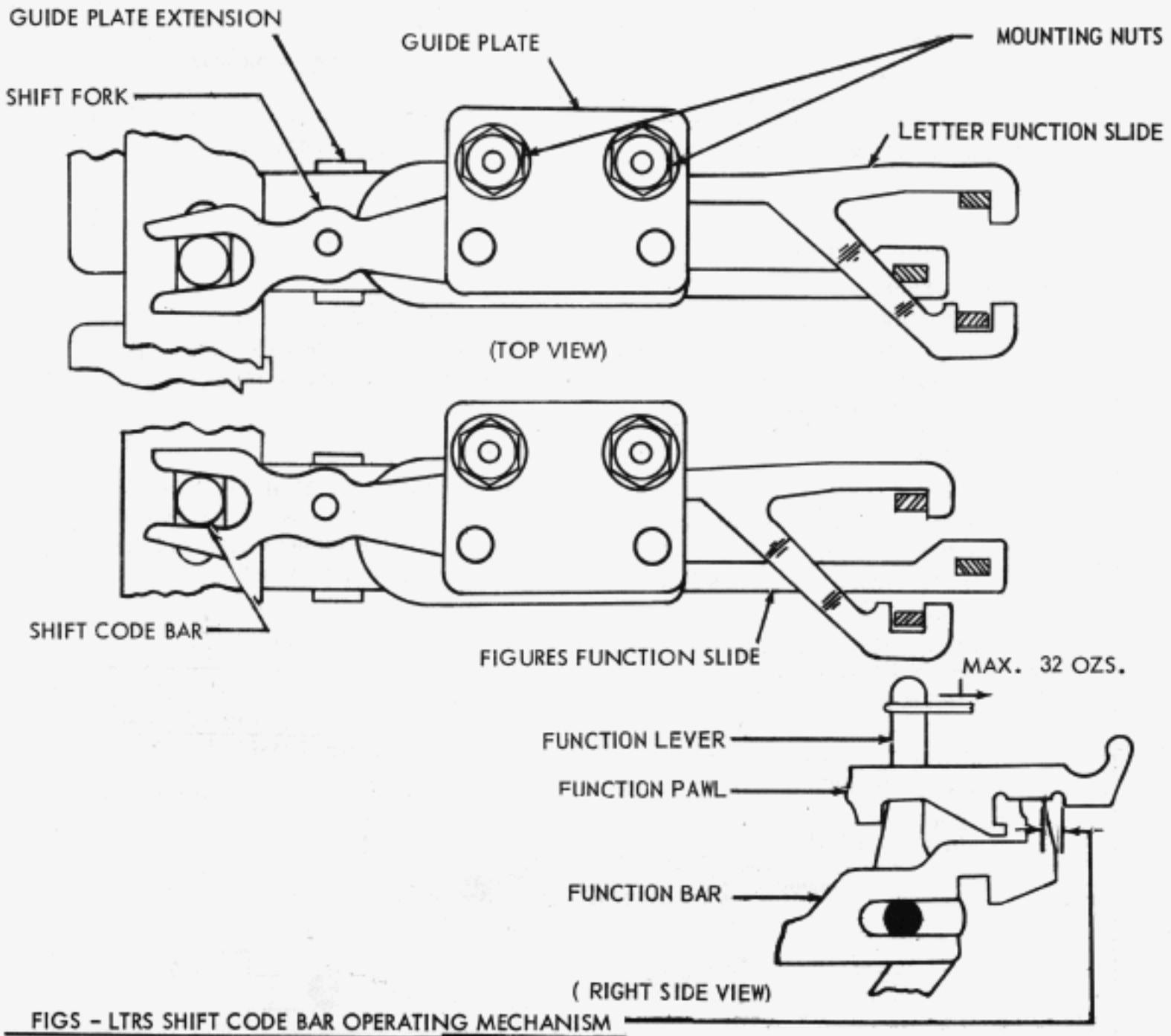

FIGS - LTRS SHIFT CODE BAR OPERATING MECHANISM

REQUIREMENT: (FOR TWO STOP FUNCTION CLUTCH)

DISENGAGE FUNCTION CLUTCH AT POSITION GIVING LEAST CLEARANCE. ROTATE TYPE BOX CLUTCH 1/2 REVOLUTION. HOLD FIGURES FUNCTION LEVER IN REARWARD POSITION WITH TENSION OF 32 OZS. CLEARANCE BETWEEN THE FUNCTION PAWL SHOULDER AND FACE OF FUNCTION BAR

MIN. 0.002 INCH

MAX. 0.015 INCH

WHEN PLAY IN PAWL IS TAKEN FOR MAXIMUM CLEARANCE.

DISENGAGE FIGURES FUNCTION PAWL.CHECK LETTERS FUNCTION PAWL IN SAME MANNER.

TO ADJUST

POSITION SHIFT ASSEMBLY WITH CLAMP SCREWS LOOSENED. TAKE UP PLAY IN MOUNTING HOLES TO REAR.

CAUTION: MANUALLY OPERATE LETTERS AND FIGURES FUNCTION LEVER ALTERNATELY LEVERS SHOULD BE FREE OF BINDS.

FIGURE 4-28 TYPING UNIT, SHIFT MECHANISM

NOTE: 1. THIS ADJUSTMENT APPLIES ONLY TO UNITS WITH TWO STOP FUNCTION CLUTCHES.
2. FOR UNITS WITH ONE STOP FUNCTION CLUTCHES SEE FIG. 1-44

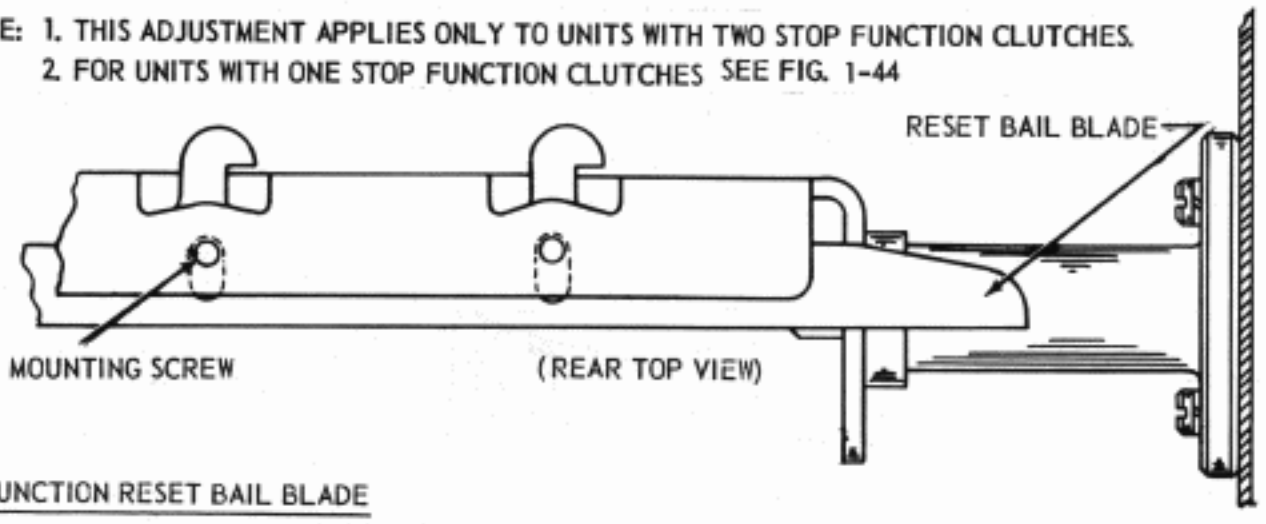

FUNCTION RESET BAIL BLADE

(1) REQUIREMENT

FUNCTION CLUTCH DISENGAGED AT STOP POSITION GIVING LEAST CLEARANCE. TYPE BOX CLUTCH DISENGAGED. ALL FUNCTION PAWLS UNLATCHED FROM THEIR FUNCTION BARS. FUNCTION BAR HELD IN MAXIMUM REARWARD POSITION. CLEARANCE BETWEEN FUNCTION BAR AND RESET BAIL BLADE
MIN. 0.018 INCH MAX. 0.035 INCH

TO CHECK

MEASURE CLEARANCE AT BARS LOCATED IN STUNT BOX SLOTS. 1, 4, 11, 18, 23, 33, 38, AND 41. IF THERE IS NO BAR IN A DESIGNATED SLOT, USE NEAREST BAR. I F THERE IS A BAR ON EACH SIDE OF A DESIGNATED VACANT SLOT, USE BAR IN HIGHEST NUMBERED SLOT. (NOTE: FACING REAR OF UNIT, SLOTS ARE NUMBERED FROM LEFT TO RIGHT)

TO ADJUST

POSITION BLADE ON RESET BAIL WITH BLADE MOUNTING SCREWS FRICTION TIGHT.

(2) REQUIREMENT

TYPE BOX CLUTCH ROTATED 1/2 REVOLUTION, FUNCTION LEVER HELD IN REARMOST POSITION WITH 2 LBS. MAXIMUM TENSION LATCH ASSOCIATED PAWL ONLY ONE AT A TIME. WITH 32 OZS. TENSION APPLIED TO FUNCTION PAWL, IT SHOULD OVERTRAVEL ITS BAR
MIN. 0.002 INCH

TO ADJUST
REFINE REQUIREMENT (1).

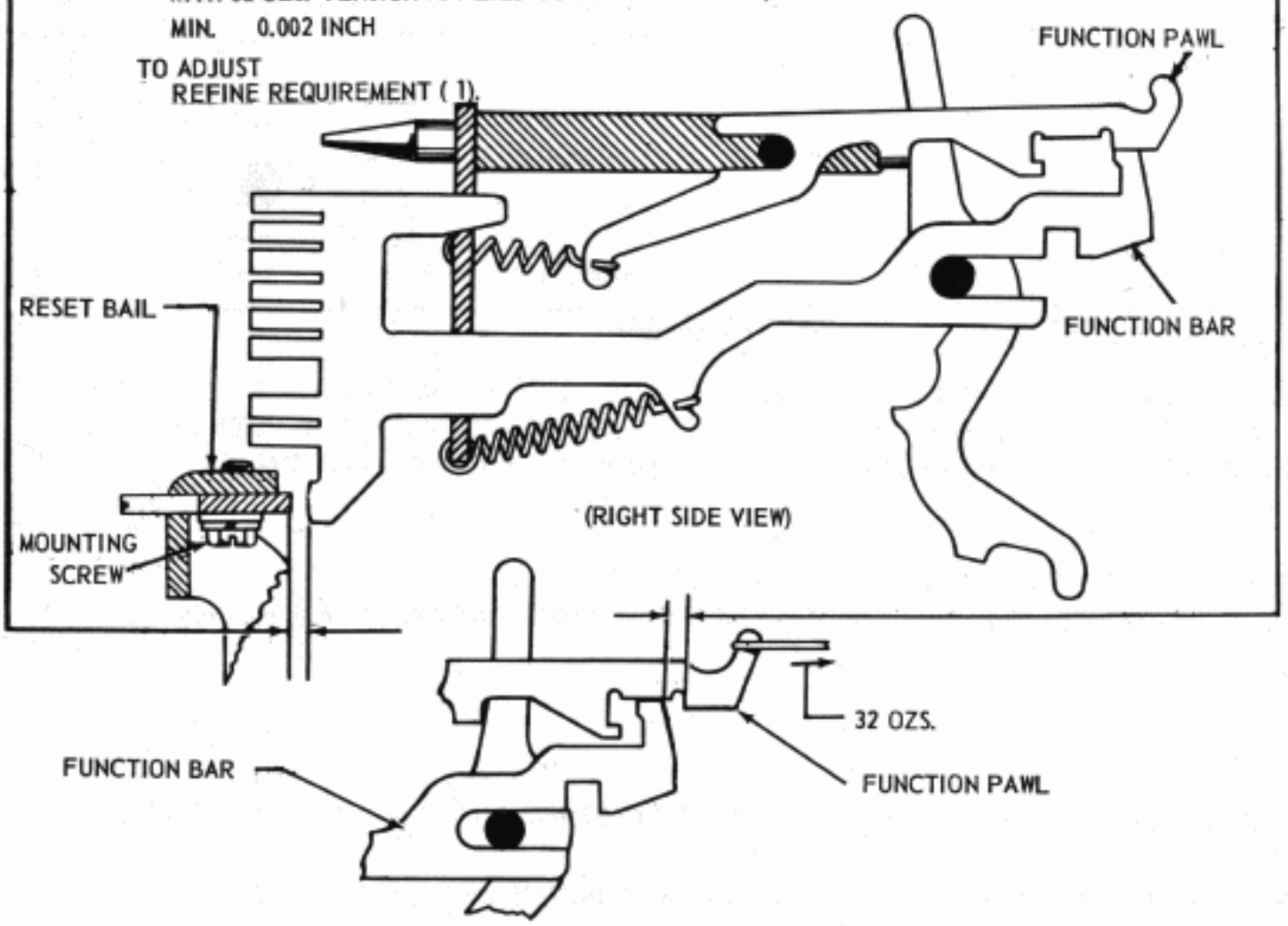

FIGURE 4-29 TYPING UNIT, FUCTION BAR RESET MECHANISM

NOTE: THESE ADJUSTMENTS APPLY ONLY TO HORIZONTAL POSITIONING DRIVE MECHANISMS EQUIPPED WITH TENSION SPRINGS

NOTE THE LOOPS OF THIS SPRING ARE OFF-SET FROM CENTER IN THE SAME DIRECTION. THE SPRING MUST BE HOOKED ON ITS ANCHORS SO THAT THE SIDE OF THE SPRING, ON WHICH THE LOOPS ARE LOCATED, IS TOWARD THE REAR OF THE MACHINE. WHEN REMOVING EITHER SPRING EXERCISE CARE TO AVOID KINKS IN LOOPS.

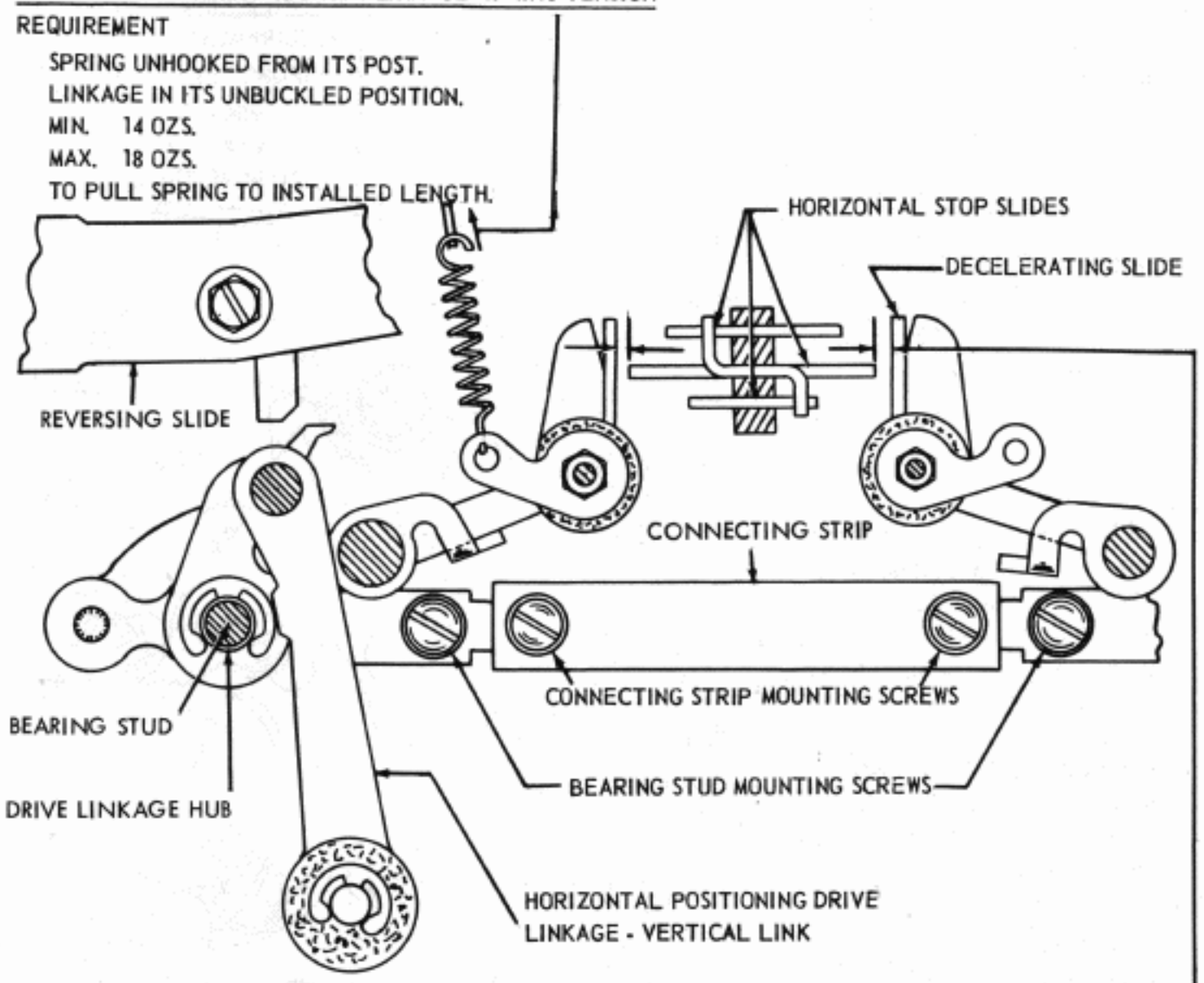

HORIZONTAL POSITIONING DRIVE LINKAGE SPRING TENSION

REQUIREMENT

SPRING UNHOOKED FROM ITS POST.
LINKAGE IN ITS UNBUCKLED POSITION.
MIN. 14 OZS.
MAX. 18 OZS.
TO PULL SPRING TO INSTALLED LENGTH.

HORIZONTAL POSITIONING DRIVE LINKAGE

REQUIREMENT

TYPE BOX CLUTCH DISENGAGED. CODE BARS 4 AND 5 TO SPACING (RIGHT).
CLEARANCE BETWEEN EACH SIDE OF CENTER HORIZONTAL STOP SLIDE AND DECELERATING SLIDES ON SIDE WHERE KNEE LINK IS STRAIGHT, SHOULD BE EQUAL (WITHIN 0.005 INCH)
MIN. 0.020 INCH
MAX. 0.040 INCH

TO ADJUST

LOOSEN BEARING STUD MOUNTING SCREWS AND CONNECTING STRIP MOUNTING SCREWS FRICTION TIGHT. POSITION ONE OR BOTH BEARING STUDS ON THE CONNECTING STRIP TO PROVIDE 0.025 INCH TO 0.035 INCH BETWEEN THE CENTER HORIZONTAL SLIDE AND THE DECELERATING SLIDE ON THE SIDE WHERE THE LINKAGE IS NOT BUCKLED. TIGHTEN THE TWO INNER MOUNTING SCREWS. CHANGE POSITION OF REVERSING SLIDE AND CHECK OPPOSITE CLEARANCE.EQUALIZE BY SHIFTING BOTH STUDS AND CONNECTING STRIP AS A UNIT. HOLD THE DRIVE LINKAGE HUB AGAINST THE LOWER VERTICAL LINK OF THE DRIVE LINKAGE. TIGHTEN THE TWO OUTER BEARING STUD MOUNTING SCREWS. CHECK THE LINKAGE FOR FREENESS THROUGHOUT A COMPLETE CYCLE. THE TYPE BOX CLUTCH DISK SHOULD HAVE SOME MOVEMENT IN THE NORMAL DIRECTION OF ROTATION IN THE STOP POSITION.

FIGURE 4-30 TYPING UNIT, HORIZONTAL POSITIONING DRIVE MECHANISM, FRONT VIEW

NOTE: CHECK RELATED ADJUSTMENTS, FIGURES 4-27, 4-32 AND 1-57 IF THE FOLLOWING ADJUSTMENTS ARE REMADE.

(B) LEFT MARGIN (FOR SPROCKET FEED UNITS SEE SECTION 2)

(1) REQUIREMENT (FOR 72 CHARACTER LINE)

TYPE BOX CLUTCH DISENGAGED. SPACING DRUM IN RETURNED POSITION. TYPE BOX SHIFTED TO THE LETTERS POSITION. CENTER OF THE LETTERS PRINT INDICATOR ON THE TYPE BOX SHOULD BE

MIN. 15/16 INCH
MAX. 1-1/16 INCH

FROM THE LEFT EDGE OF THE PLATEN.

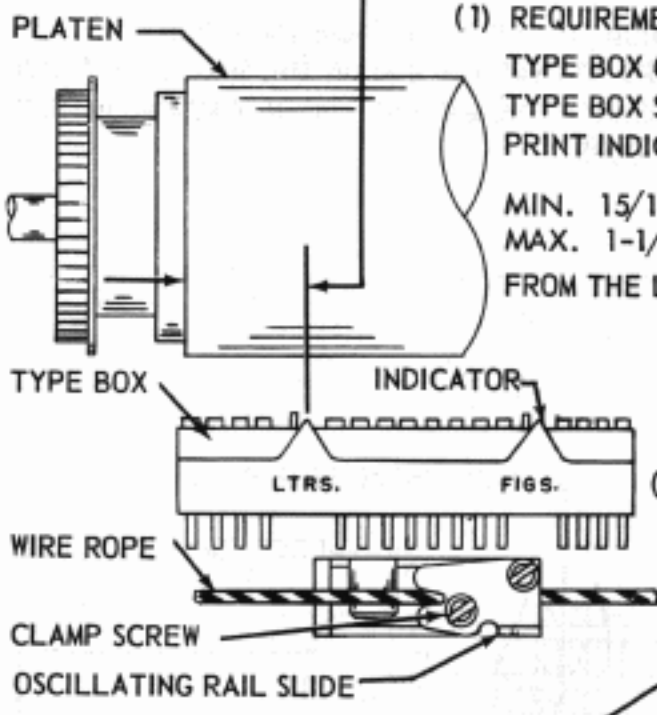

(C) AUTOMATIC CR – LF BELL CRANK SPRING

REQUIREMENT

FUNCTION CLUTCH DISENGAGED.

MIN. 6 1/2 OZS.
MAX. 11 OZS.

TO MOVE THE BELL CRANK.

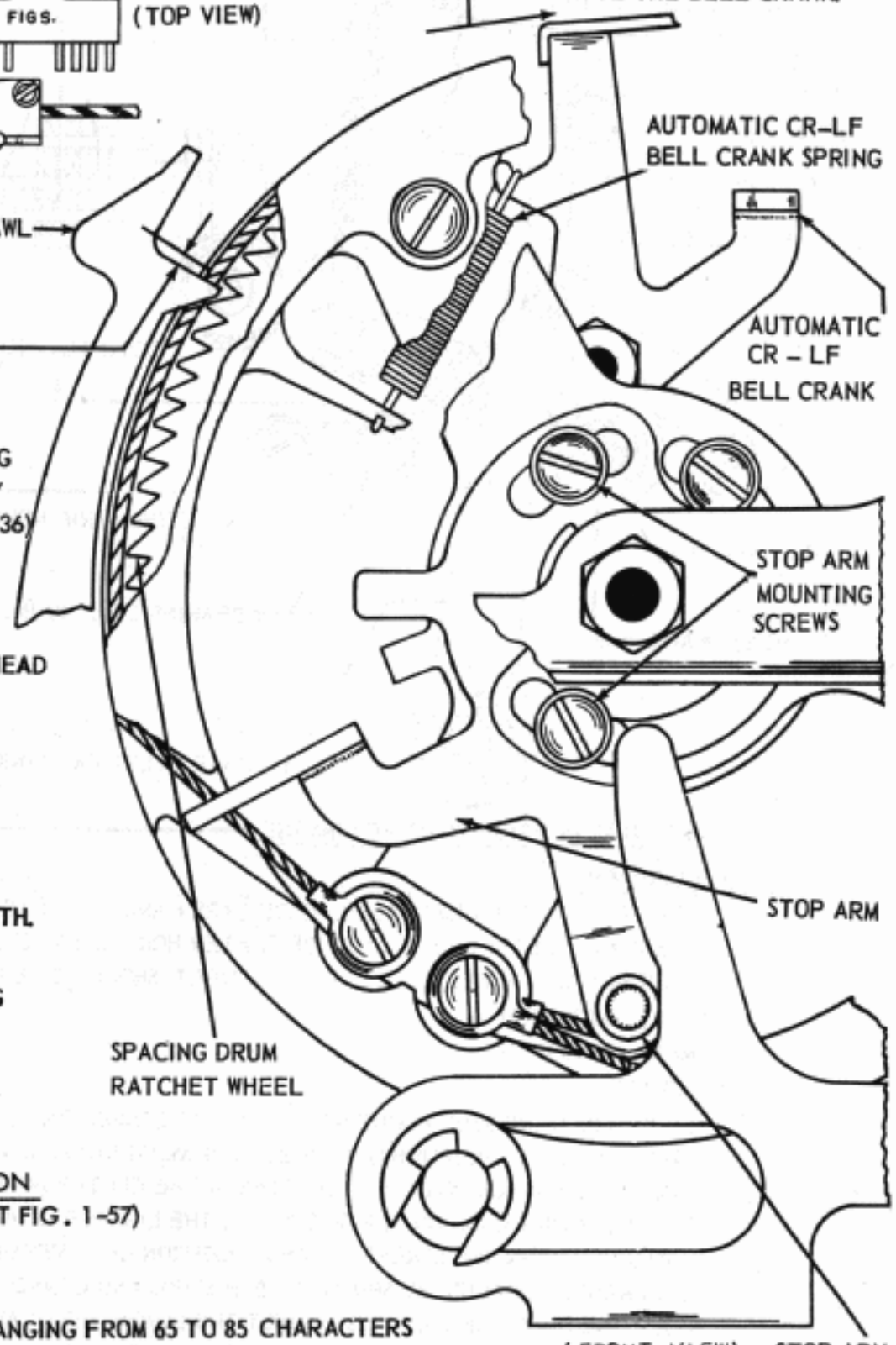

(2) REQUIREMENT

SPACING CLUTCH DISENGAGED. FRONT SPACING FEED PAWL FARTHEST ADVANCED. SPACING DRUM FULLY RETURNED. PLAY IN SPACING SHAFT GEAR (FIG.1-36) TAKEN UP CLOCKWISE. CLEARANCE BETWEEN PAWL AND SHOULDER OF RATCHET WHEEL TOOTH IMMEDIATELY AHEAD

MIN. 0.002 INCH
MAX. 0.015 INCH

(3) REQUIREMENT

REAR PAWL, WHEN FARTHEST ADVANCED, SHOULD REST AT BOTTOM OF INDENTATION BETWEEN RATCHET WHEEL TEETH.

TO ADJUST

POSITION STOP ARM ON SPACING DRUM WITH MOUNTING SCREWS LOOSENED.

(A) PRINTING CARRIAGE POSITION
(USE STANDARD ADJUSTMENT FIG. 1-57)

NOTE:
FOR OTHER LENGTHS OF LINE, RANGING FROM 65 TO 85 CHARACTERS THE MARGIN CAN BE VARIED AS REQUIRED.

NOTE

THIS VIEW SHOWS THE SPACING DRUM FULLY RETURNED.

FIGURE 4-31. TYPING UNIT, CARRIAGE RETURN MECHANISM

NOTE: CHECK RELATED ADJUSTMENTS, FIGURES 4-27, 1-49 AND 1-57, IF THE FOLLOWING ADJUSTMENTS ARE REMADE.

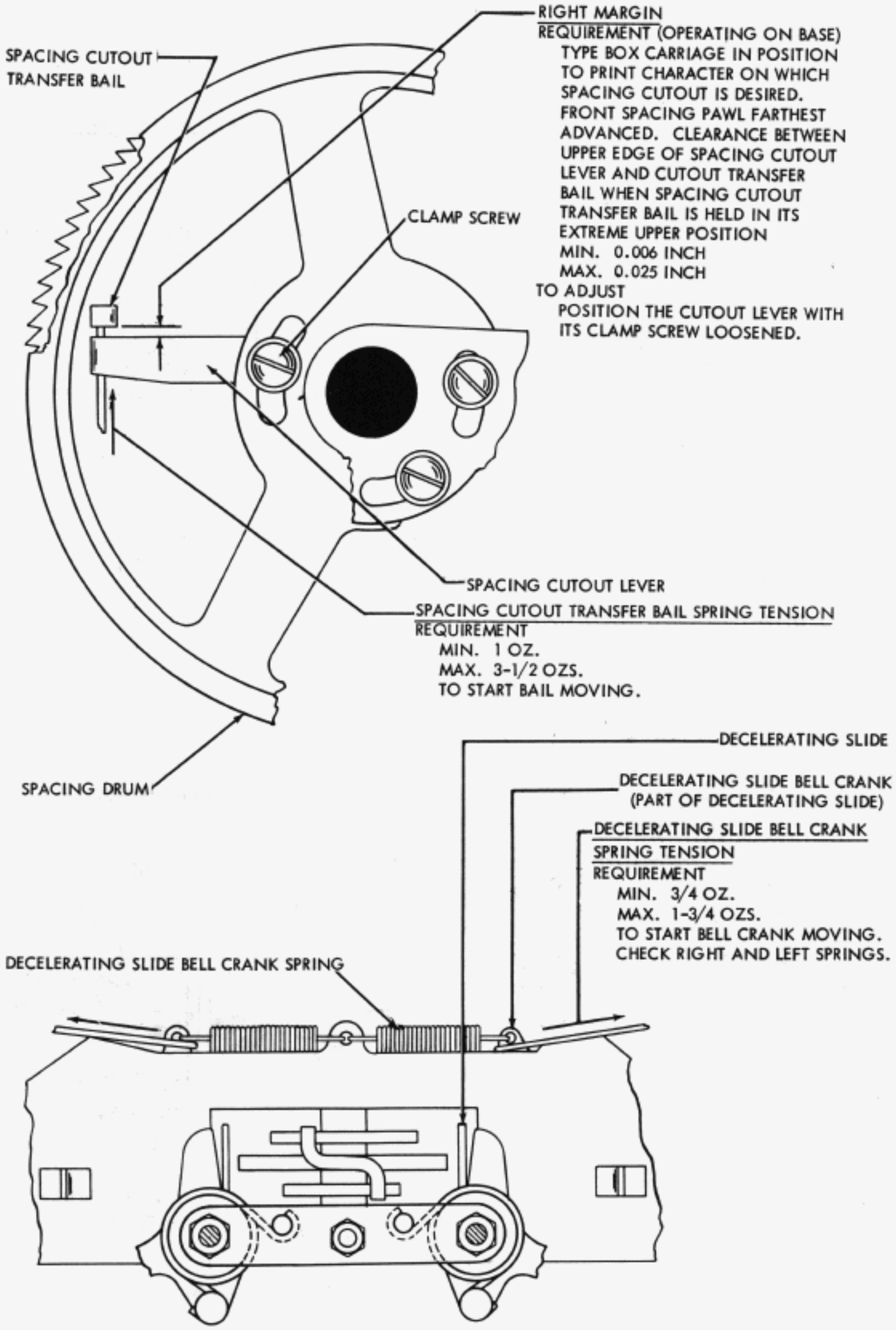

FIGURE 4-32 TYPING UNIT, RIGHT MARGIN AND DECELERATING SLIDE MECHANISM, FRONT VIEW

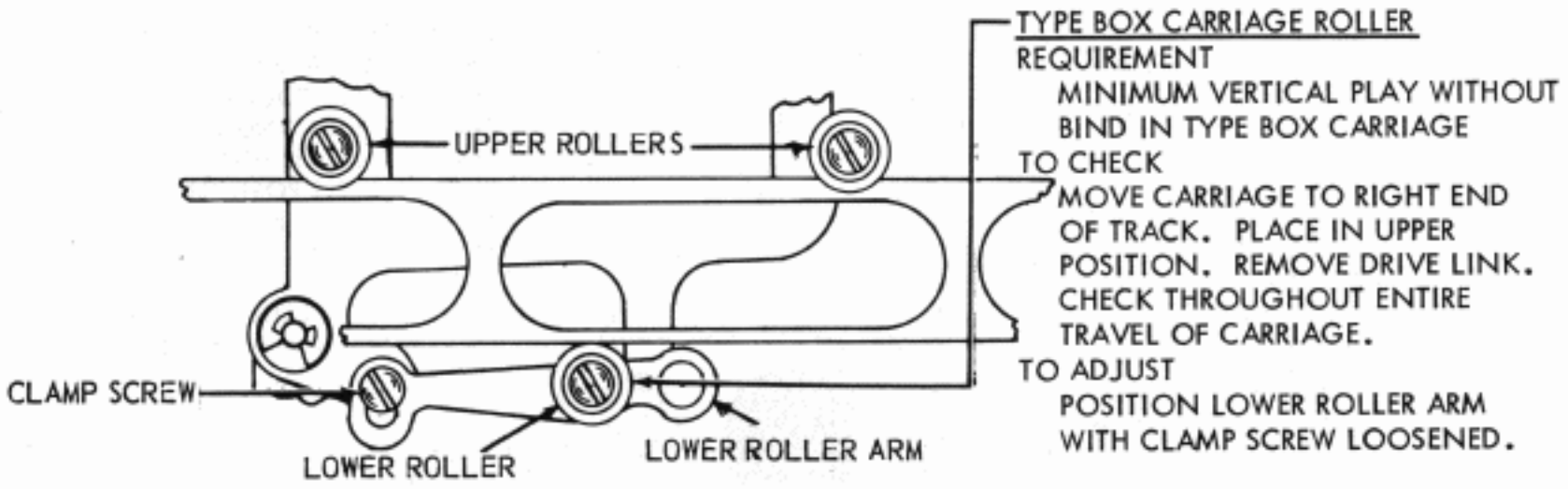

FIGURE 4-33 TYPING UNIT, PRINTING AND TYPE BOX CARRIAGE

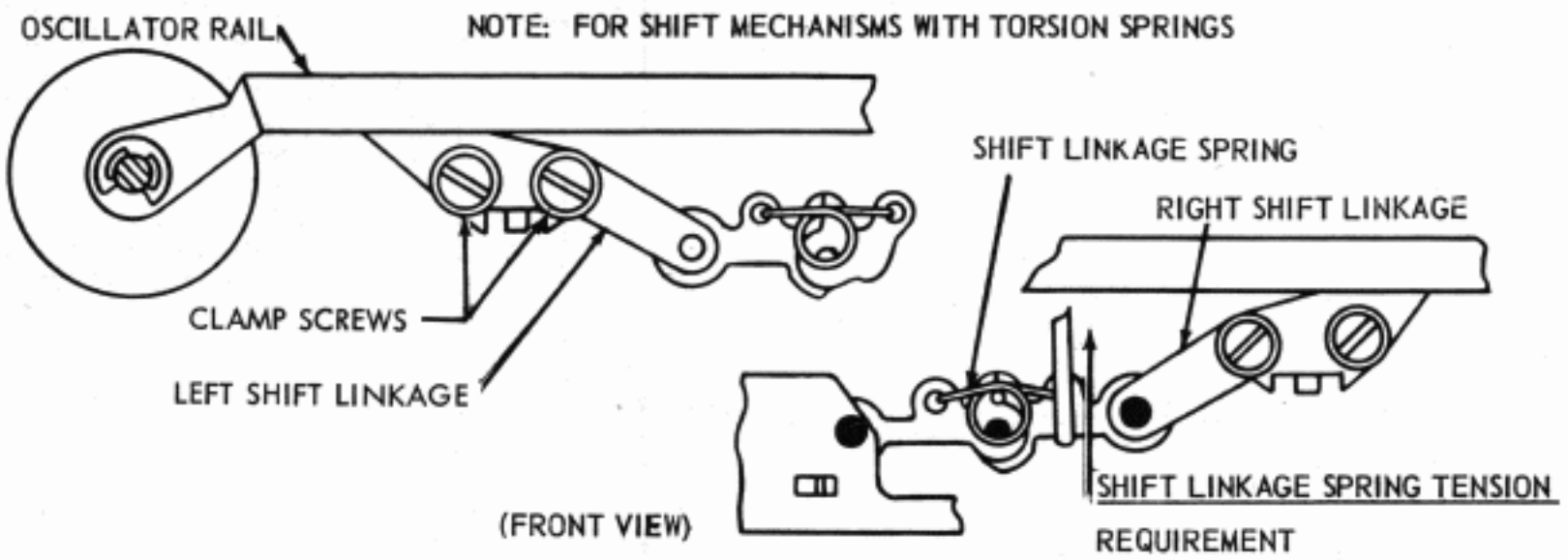

FIGURE 4-34 TYPING UNIT, SHIFT MECHANISM

(A) PRINTING HAMMER STOP BRACKET

(FOR THICK TYPE BOX WITH DUMMY PALLETS)

REQUIREMENT

TYPE BOX IN BLANK OR CR POSITION (WHICHEVER DOES NOT PRINT) AND NEAR CENTER OF PLATEN. PRINTING TRACK IN ITS DOWNWARD POSITION. PRINTING HAMMER HELD AGAINST ITS STOP WITH 8 OZS. OF PRESSURE. CLEARANCE BETWEEN PRINTING HAMMER AND DUMMY TYPE PALLET

FRICTION FEED

MIN. 0.008 INCH

MAX. 0.020 INCH

TO ADJUST

POSITION THE STOP BRACKET WITH ITS MOUNTING SCREW AND THE PRINTING HAMMER BAIL PIVOT STUD LOOSENED.

(FOR SPROCKET FEED UNITS, SEE FIGURE 2-9)

(C)

TYPE PALLET SPRING TENSION

REQUIREMENT

TYPE BOX REMOVED FROM THE UNIT. 8 OZ. SCALE APPLIED VERTICALLY TO THE END OF THE PALLET SHANK.

MIN. 1/4 OZ.

MAX. 3/4 OZ.

TO START PALLET MOVING.

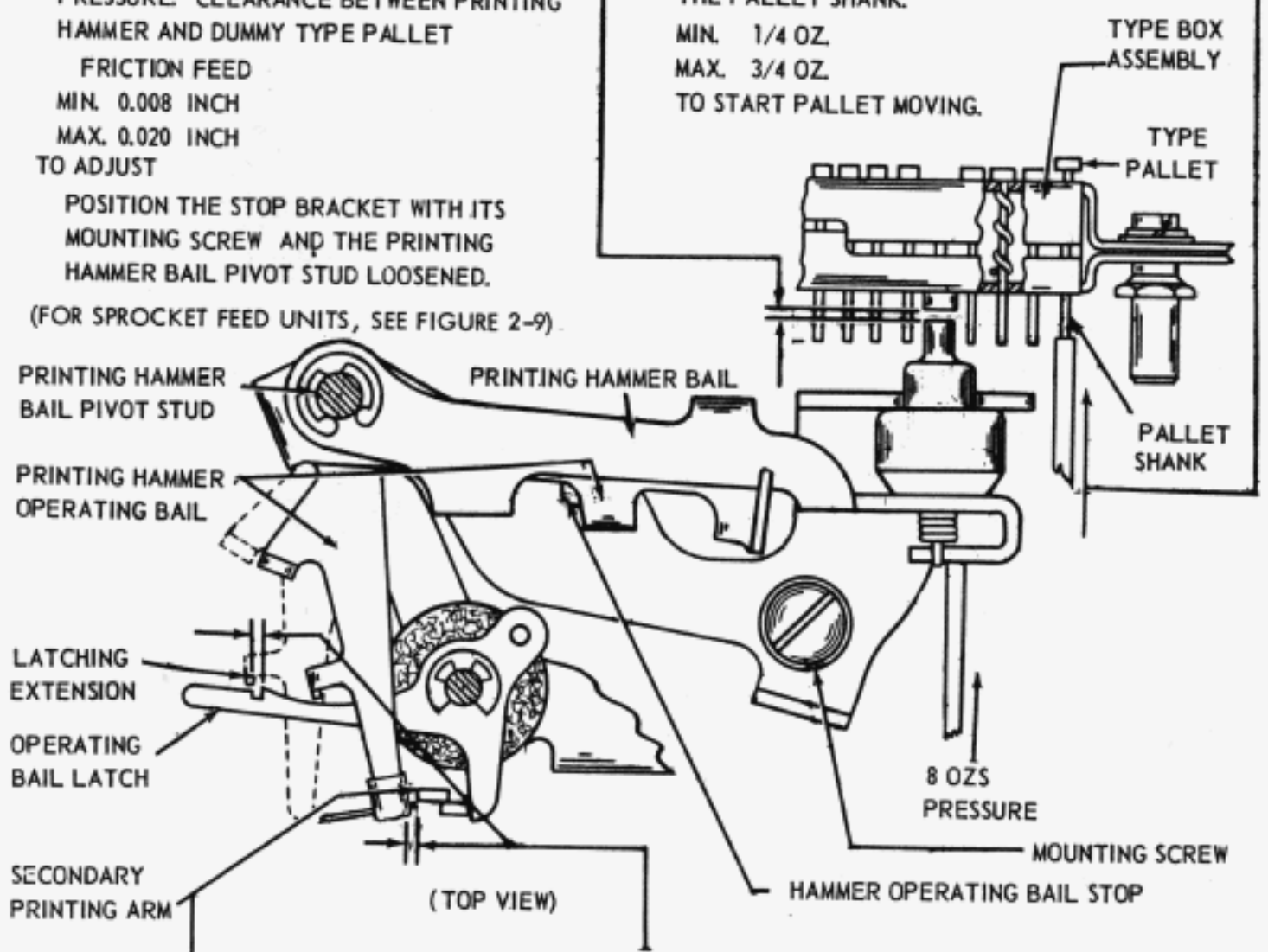

(B) PRINTING ARM

(1) REQUIREMENT

PRINTING TRACK IN MAXIMUM DOWNWARD POSITION.

PRINTING HAMMER OPERATING BAIL AGAINST ITS STOP.

SOME CLEARANCE BETWEEN SECONDARY PRINTING ARM AND FORWARD EXTENSION OF HAMMER OPERATING BAIL.

MAX. 0.015 INCH

WHEN PRINTING ARM SLIDE IS HELD DOWNWARD OVER EACH PRINTING TRACK MOUNTING SCREW FOR MAXIMUM CLEARANCE

(2) REQUIREMENT

PRINTING TRACK IN UPPERMOST POSITION. LATCHING EXTENSION OF PRINTING HAMMER OPERATING BAILSHOULD OVERTRAVEL LATCHING SURFACE OF OPERATING BAIL LATCH BY

MIN. 0.006 INCH

CHECK RIGHT AND LEFT POSITION

TO ADJUST

POSITION SECONDARY PRINTING ARM WITH CLAMP SCREWS LOOSENED.

NOTE

THE PRINTING ARM ADJUSTMENT SHOULD ALWAYS BE MADE WITH THE PRINTING HAMMER OPERATING BAIL SPRING BRACKET (FIGURE 1-49) IN THE NO. 1 POSITION POSITIONS NO. 2 AND NO. 3 ARE TO BE USED ONLY FOR MAKING MULTIPLE COPIES.

FIGURE 4-35 TYPING UNIT, PRINTING MECHANISM

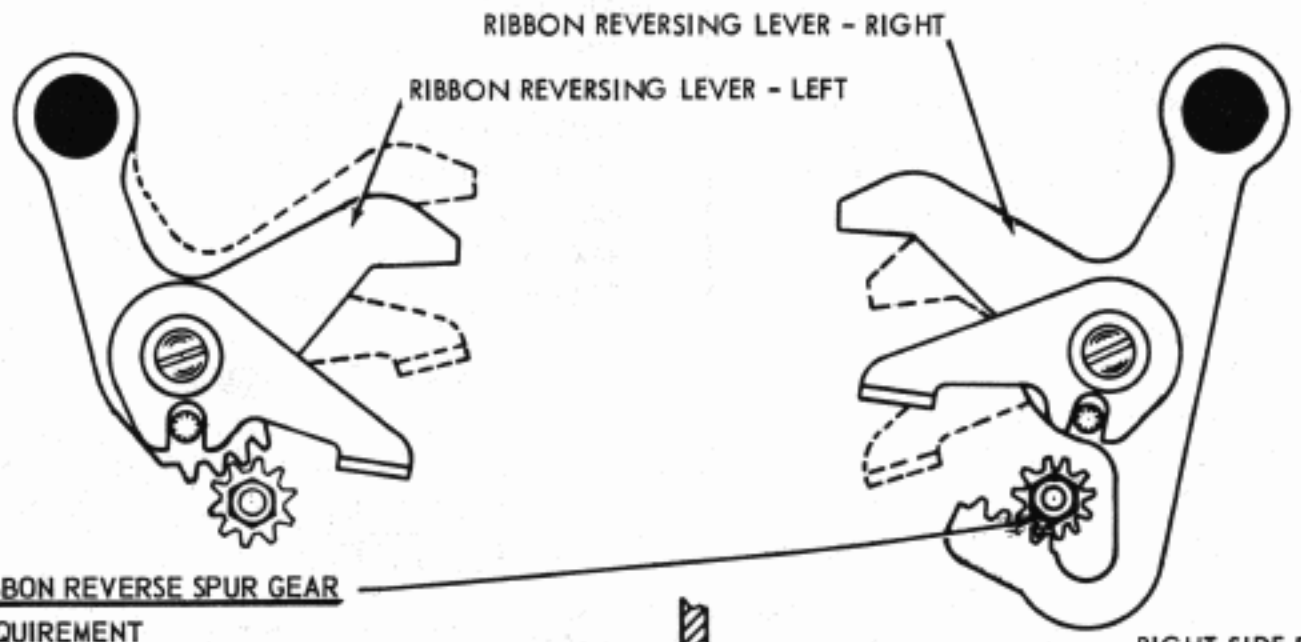

·(A) RIBBON REVERSE SPUR GEAR

REQUIREMENT

WHEN RIGHT REVERSING LEVER IS IN MAXIMUM DOWNWARD POSITION, THE LEFT REVERSING LEVER SHOULD BE IN ITS MAXIMUM UPWARD POSITION.

TO ADJUST

LOOSEN THE SET SCREWS IN THE DETENT CAM. LOOSEN THE LEFT SPUR GEAR NUT. SECURELY TIGHTEN THE RIGHT SPUR GEAR NUT. MOVE THE RIGHT REVERSING LEVER TO ITS MAXIMUM DOWNWARD POSITION AND HOLD LEFT REVERSING LEVER IN ITS MAXIMUM UPWARD POSITION. THEN TIGHTEN THE LEFT SPUR GEAR NUT.

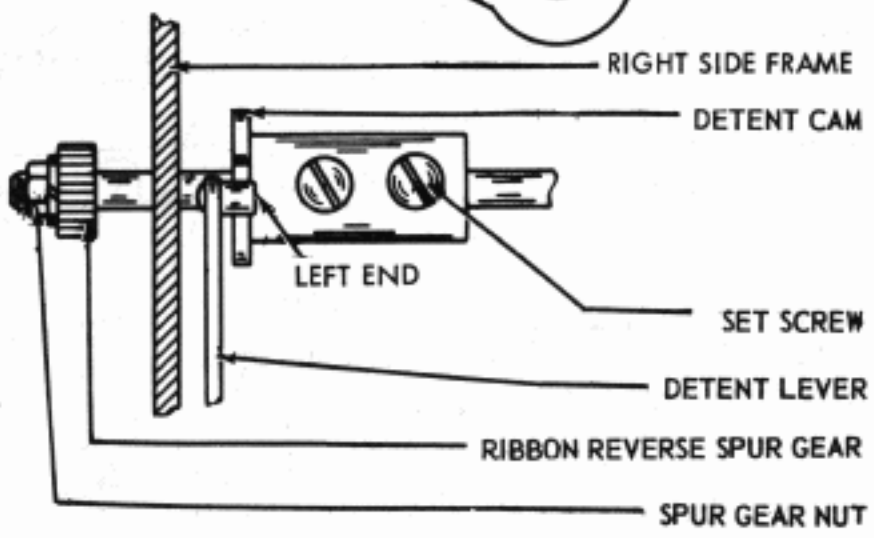

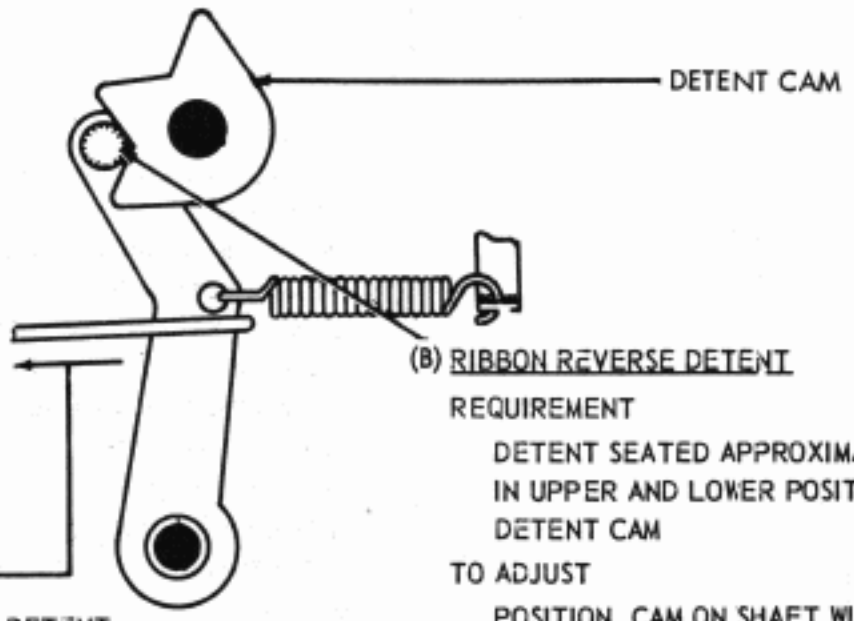

(B) RIBBON REVERSE DETENT

REQUIREMENT

DETENT SEATED APPROXIMATELY EQUAL IN UPPER AND LOWER POSITIONS OF DETENT CAM

TO ADJUST

POSITION CAM ON SHAFT WITH SET SCREWS LOOSENED. LET LEFT END OF DETENT STUD BE APPROXIMATELY FLUSH WITH LEFT FACE OF CAM (PLAY IN DETENT TAKEN TO RIGHT OF PRINTER)

(C) RIBBON REVERSE DETENT LEVER SPRING TENSION

REQUIREMENT

DETENT SEATED IN NOTCH OF CAM. RIGHT RIBBON REVERSING LEVER HELD DOWNWARD.

MIN. 6 1/2 OZS.

MAX. 9 OZS.

TO START THE DETENT LEVER MOVING.

FIGURE 4-36 · TYPING UNIT, RIBBON REVERSE MECHANISM

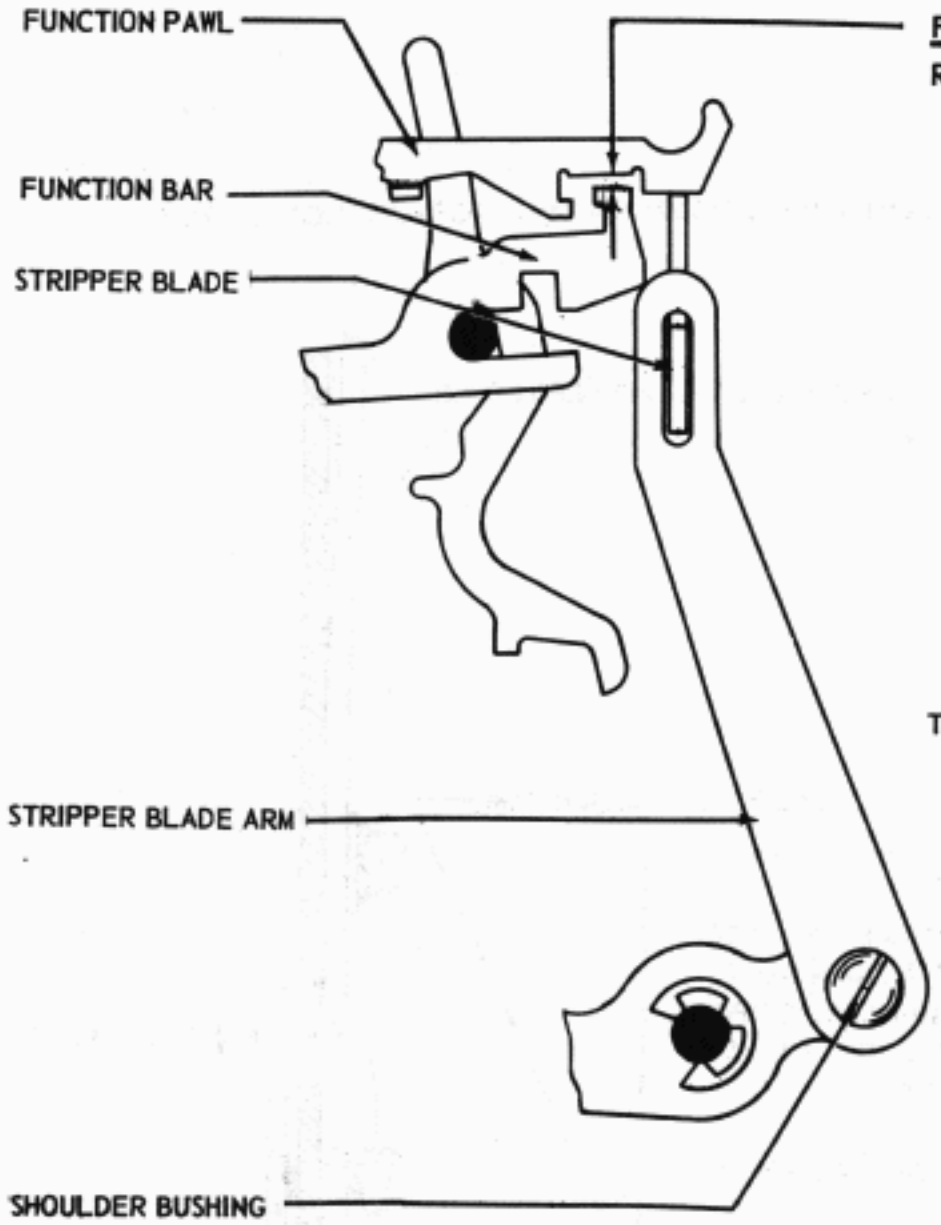

FUNCTION STRIPPER BLADE ARMS

REQUIREMENT

TYPE BOX CLUTCH AND FUNCTION CLUTCH DISENGAGED. LEFT LINE FEED FUNCTION PAWL HELD IN ITS REAR POSITION AND RESTING ON THE UPPER EDGE OF THE STRIPPER BLADE. CLEARANCE BETWEEN UPPER EDGE OF FUNCTION BAR AND LOWER SURFACE OF NOTCHED SECTION OF FUNCTION PAWL.

MIN. 0.055 INCH
MAX. 0.065 INCH

THE LETTERS FUNCTION PAWL NEAR THE OPPOSITE END OF THE STRIPPER BLADE SHOULD HAVE THE SAME CLEARANCE.

TO ADJUST

POSITION THE SHOULDER BUSHING AT THE LOWER END OF THE RIGHT AND LEFT STRIPPER BLADE ARM WITH THE LOCK NUT LOOSENED.

NOTE

WHEN CHECKING THIS ADJUSTMENT SINGLE–DOUBLE LINEFEED LEVER MUST BE IN DOUBLE LINEFEED POSITION.

FIGURE 4-37 TYPING UNIT, FUNCTION PAWL STRIPPER MECHANISM

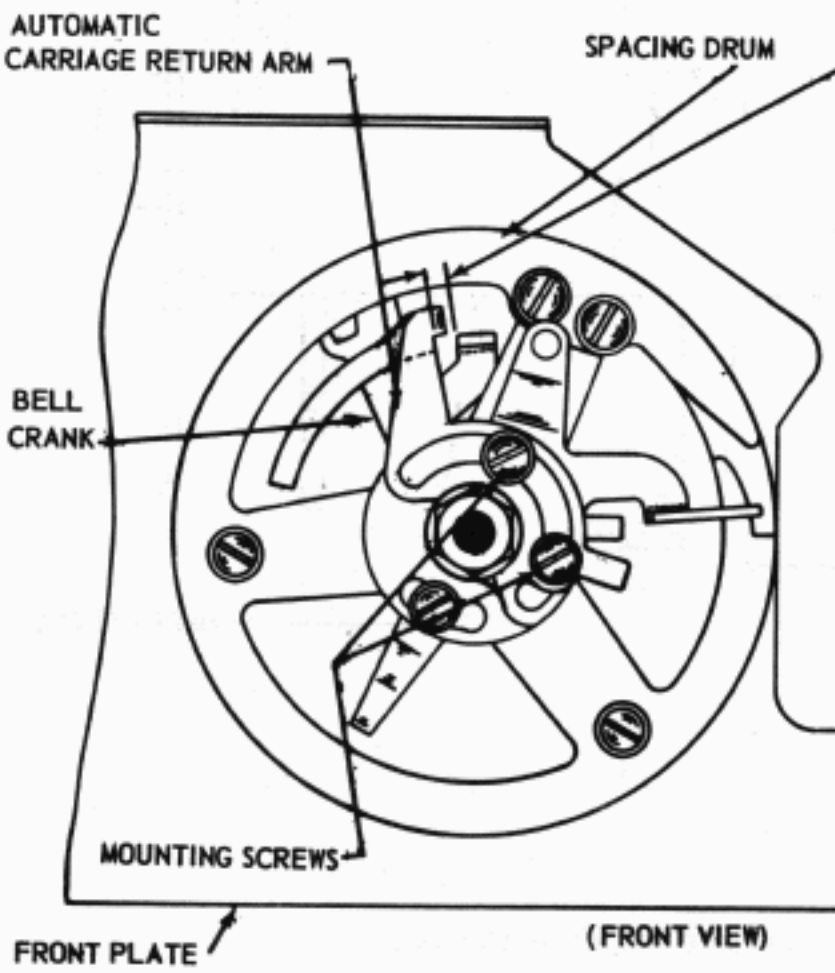

AUTOMATIC CARRIAGE RETURN AND LINE FEED ARM

REQUIREMENT (OPERATING ON BASE)

CARRIAGE IN POSITION TO PRINT TWO SPACES BEFORE THE LAST DESIRED CHARACTERS, AND FRONT SPACING PAWL FARTHEST ADVANCED. CLEARANCE BETWEEN LEADING END OF AUTOMATIC CARRIAGE RETURN ARM AND BELL CRANK.

MIN. 0.040 INCH
MAX. 0.055 INCH

TO ADJUST

POSITION AUTOMATIC CARRIAGE RETURN ARM WITH MOUNTING SCREWS LOOSENED.

NOTE

RANGE OF ADJUSTMENT IS FROM 65TH TO 85TH CHARACTERS.

NOTE

FOR UNITS EQUIPPED WITH UNIVERSAL SPACING DRUM, SEE FIGURE 142.

FIGURE 4-38 TYPING UNIT, HORIZONTAL MOTION STOP AND AUTOMATIC CARRIAGE RETURN MECHANISM

NOTE: THIS ADJUSTMENT APPLIES ONLY TO UNITS WITH A TWO-STOP FUNCTION CLUTCH

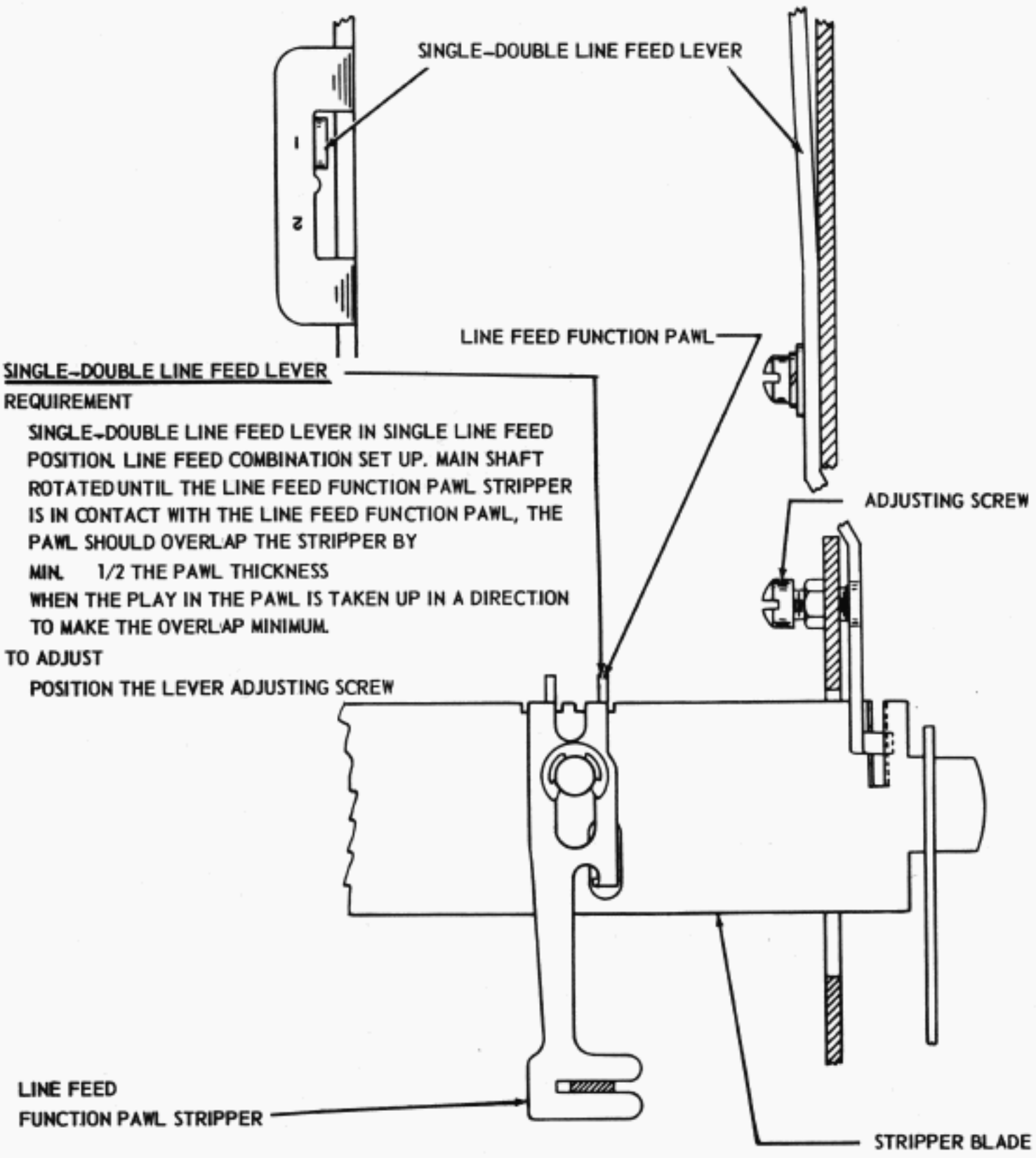

FIGURE 4–39 TYPING UNIT, SINGLE–DOUBLE LINE FEED MECHANISM

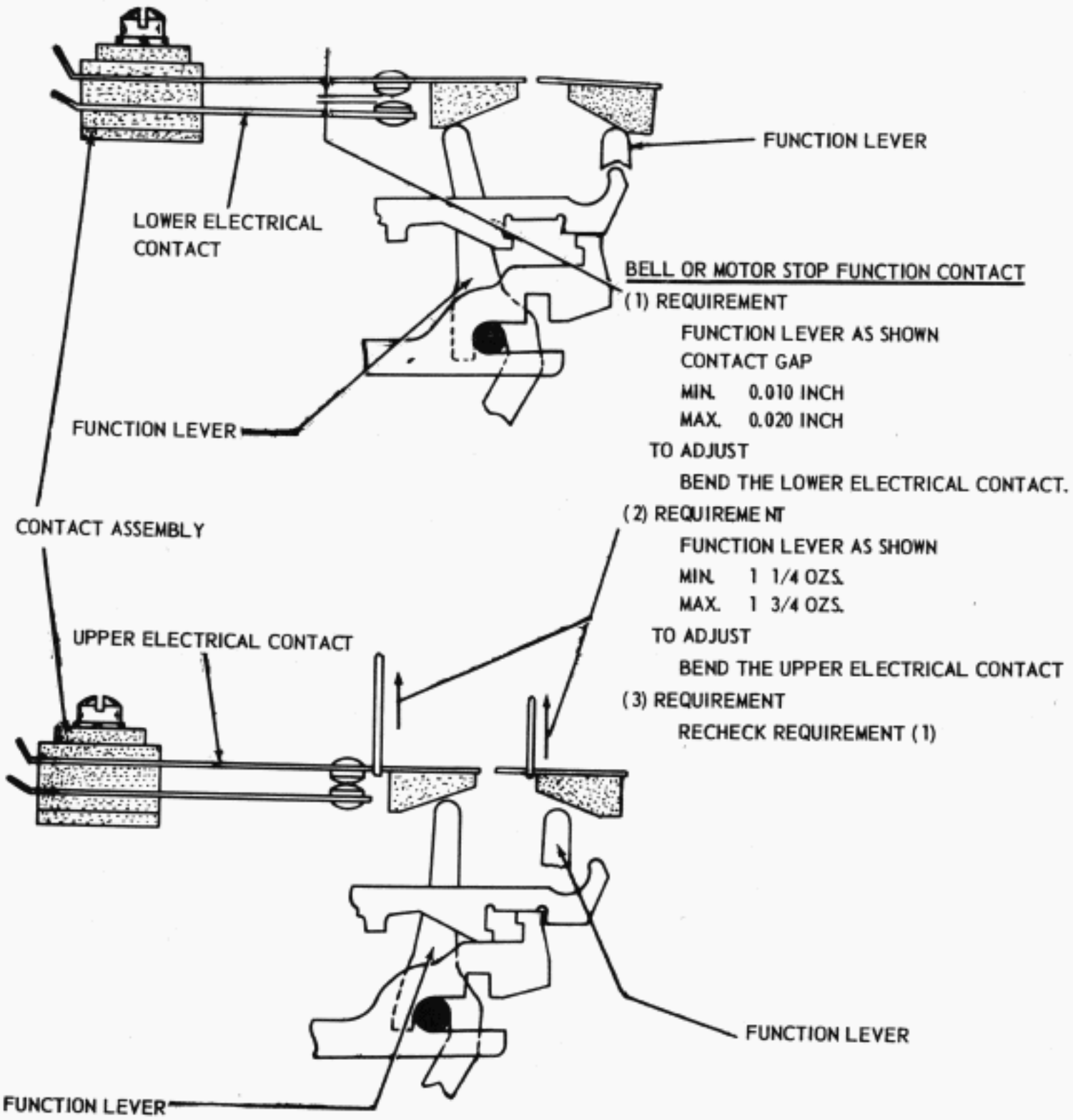

FIGURE 4-40 TYPING UNIT, FUNCTION CONTACT

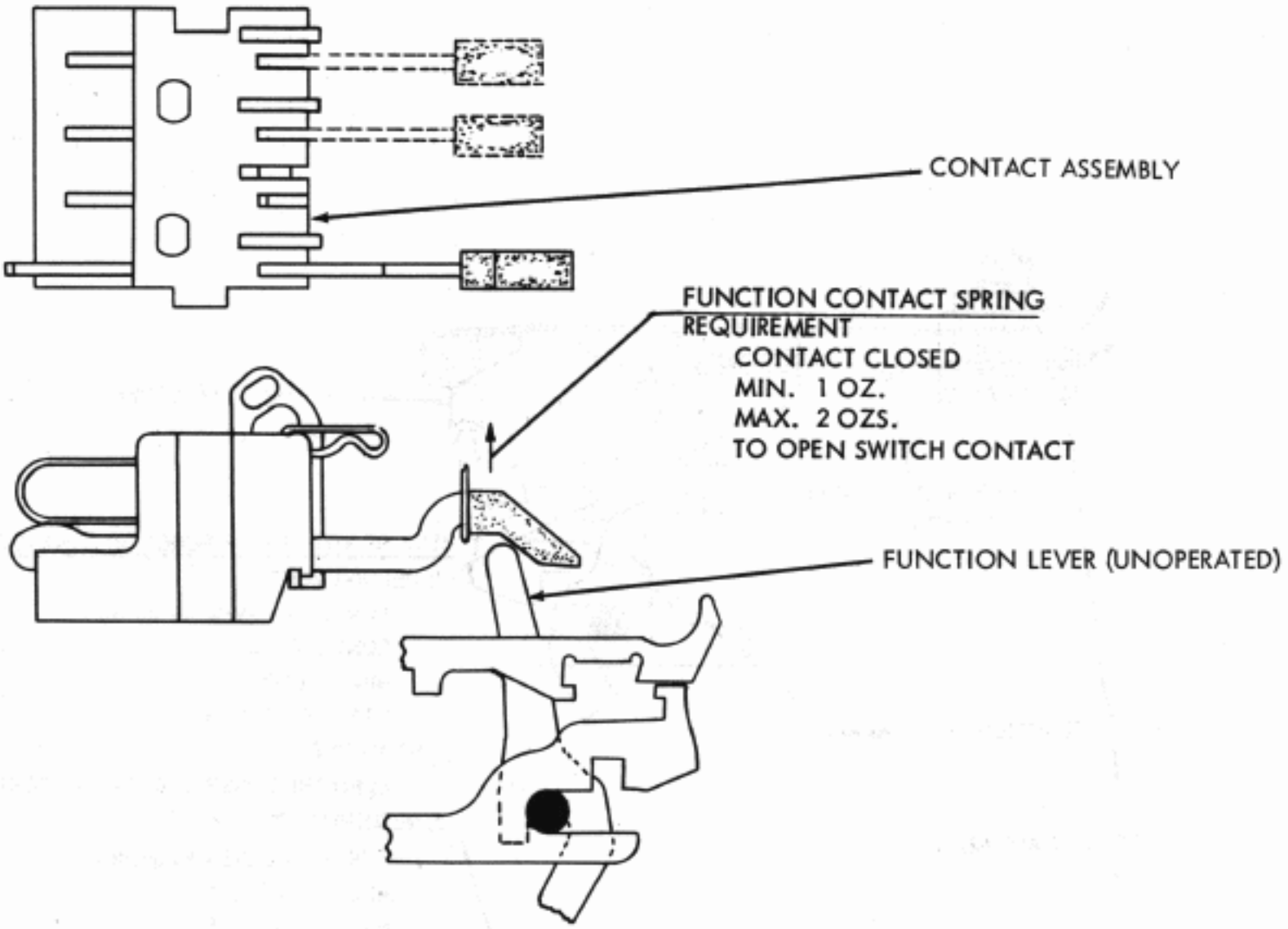

CAUTION: CARE SHOULD BE EXERCISED IN SOLDERING TO CONTACT SPRINGS SINCE EXCESSIVE HEAT WILL ANNEAL THE SPRINGS.

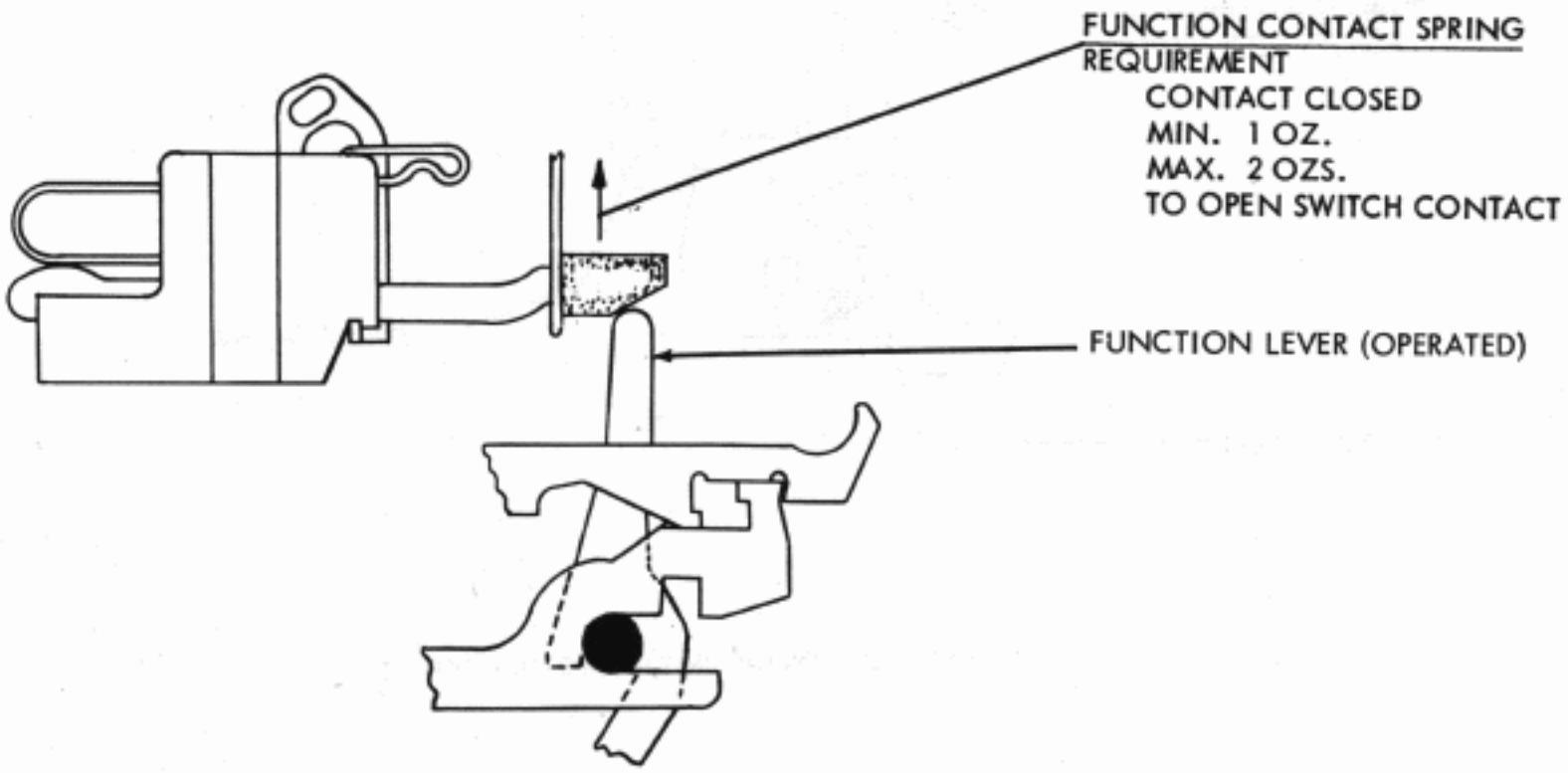

FIGURE 4-41 TYPING UNIT, FUNCTION CONTACTS

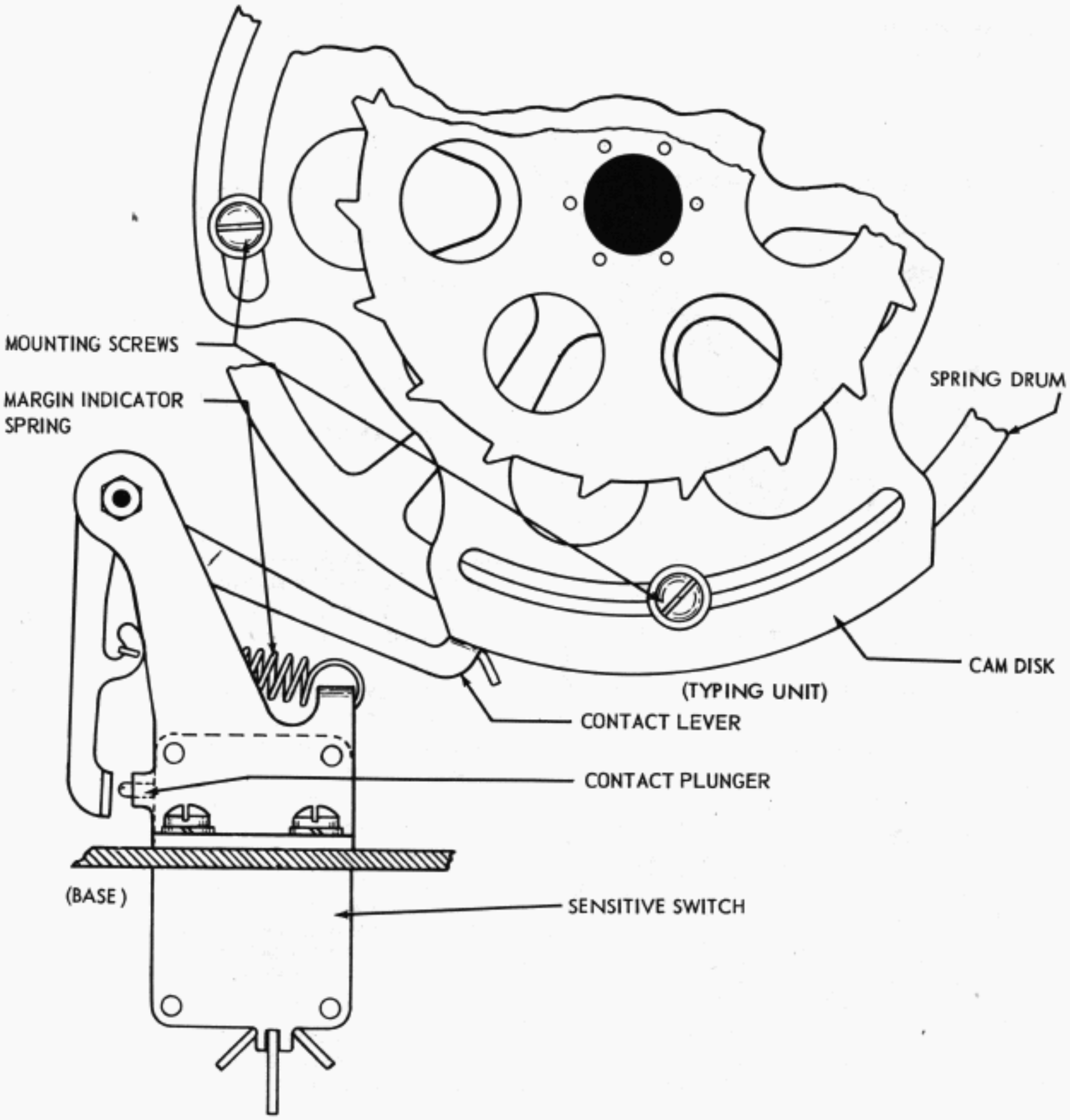

MARGIN INDICATOR LAMP

REQUIREMENT

OPERATING UNDER POWER, THE LAMP SHOULD LIGHT ON THE DESIRED CHARACTER.

TO ADJUST

SET THE TYPE BOX CARRIAGE TO PRINT THE DESIRED CHARACTER AND POSITION THE CAM DISK COUNTERCLOCKWISE ON THE SPRING DRUM WITH ITS THREE MOUNTING SCREWS LOOSENED SO THAT THE SWITCH JUST OPENS. IF A LINE SHORTER THAN 72 CHARACTERS IS REQUIRED, IT MAY BE NECESSARY TO REMOVE THE CAM DISK SCREWS AND INSERT THEM IN ADJACENT SLOTS OF THE DISK, IF THE RANGE OF ROTATION IN ONE SLOT IS NOT ENOUGH.

FIGURE 4-42 BASE AND TYPING UNIT, MARGIN INDICATING MECHANISM

3. VARIABLE FEATURES

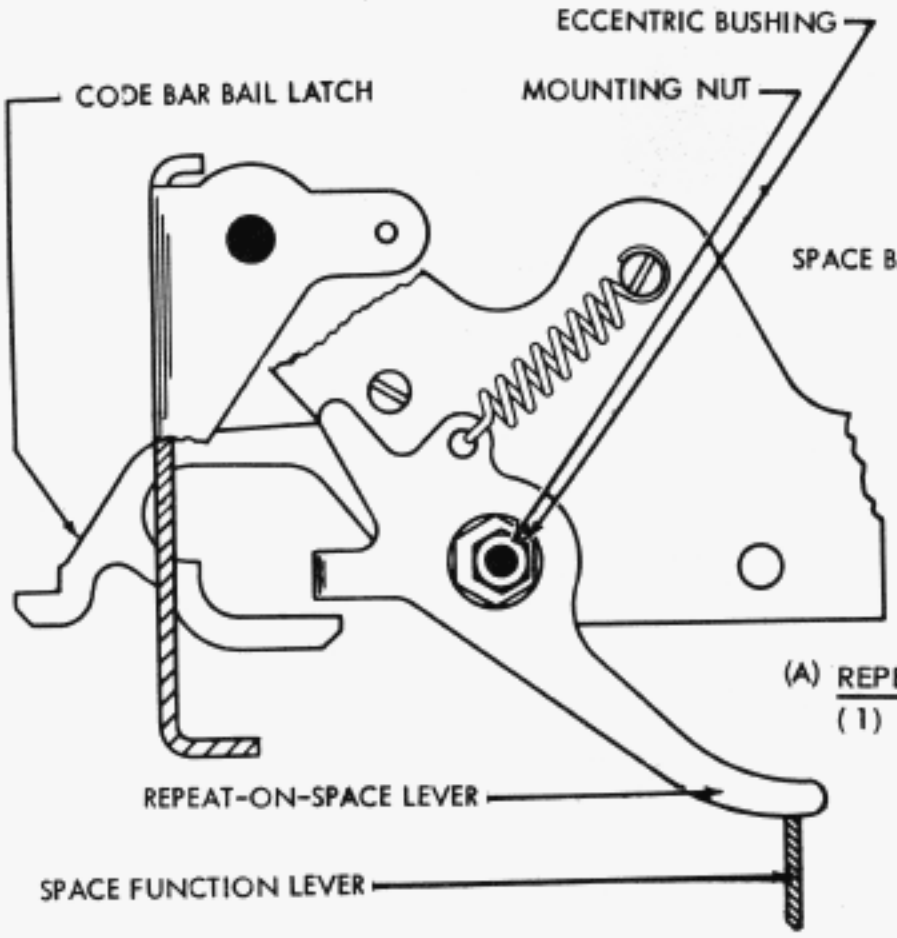

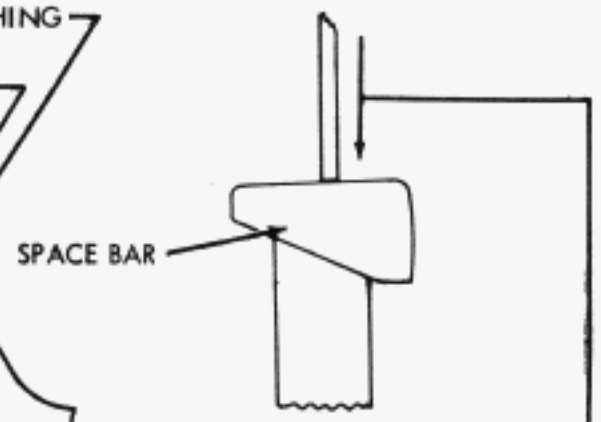

(A) REPEAT-ON-SPACE LEVER

(1) REQUIREMENT (MOTOR RUNNING)

MIN. 3 1/2 OZS. MAX. 8 OZS.
TO TRANSMIT SINGLE SPACE.

TO CHECK

GRADUALLY APPLY PRESSURE TO SPACE BAR.

(2) REQUIREMENT (MOTOR RUNNING)

MAX. 10 OZS.
TO EFFECT CONTINOUS SPACE TRANSMISSION.

TO CHECK

ABRUPTLY APPLY PRESSURE TO SPACE BAR AND HOLD IT DOWN.

NOTE: ABRUPT OPERATION IS NECESSARY TO DISABLE CODE BAR BAIL LATCH WITHIN THE 10 OZ. MAX. REQUIREMENT.

TO ADJUST

FULLY DEPRESS SPACE BAR. POSITION ECCENTRIC BUSHING WITH MOUNTING NUT FRICTION TIGHT, GENERATOR SHAFT ROTATING UNDER POWER.

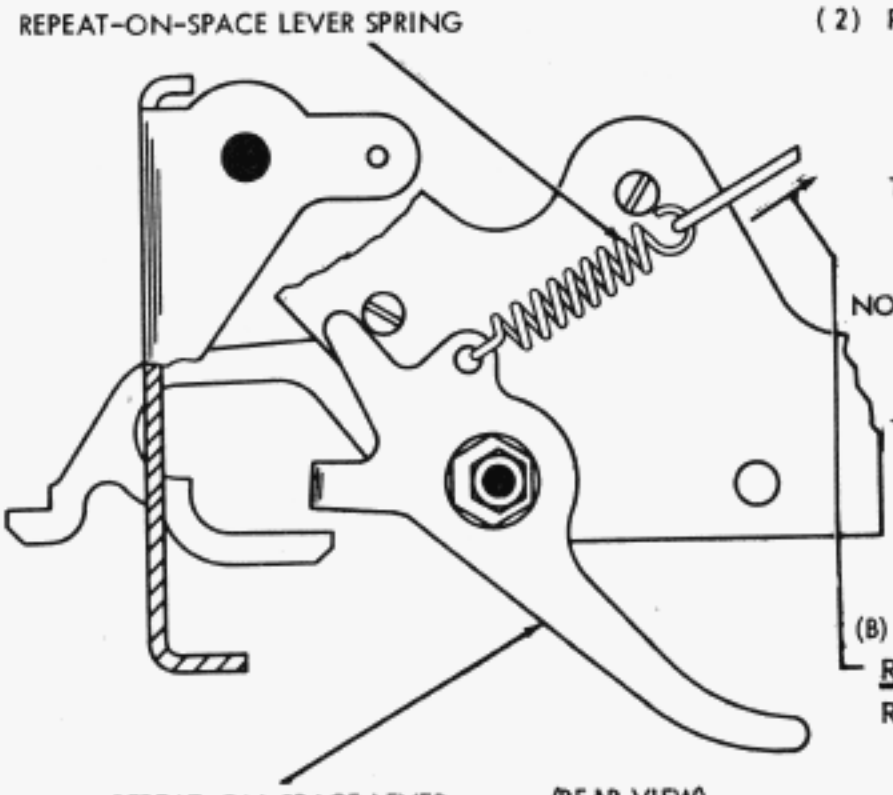

(B) REPEAT-ON-SPACE LEVER SPRING

REQUIREMENT

GENERATOR CLUTCH DISENGAGED SPRING UNHOOKED FROM POST

MIN. 1/2 OZ.
MAX. 1 1/2 OZS.
TO PULL SPRING TO POSITION LENGTH.

FIGURE 4-43 KEYBOARD, REPEAT-ON-SPACE MECHANISM

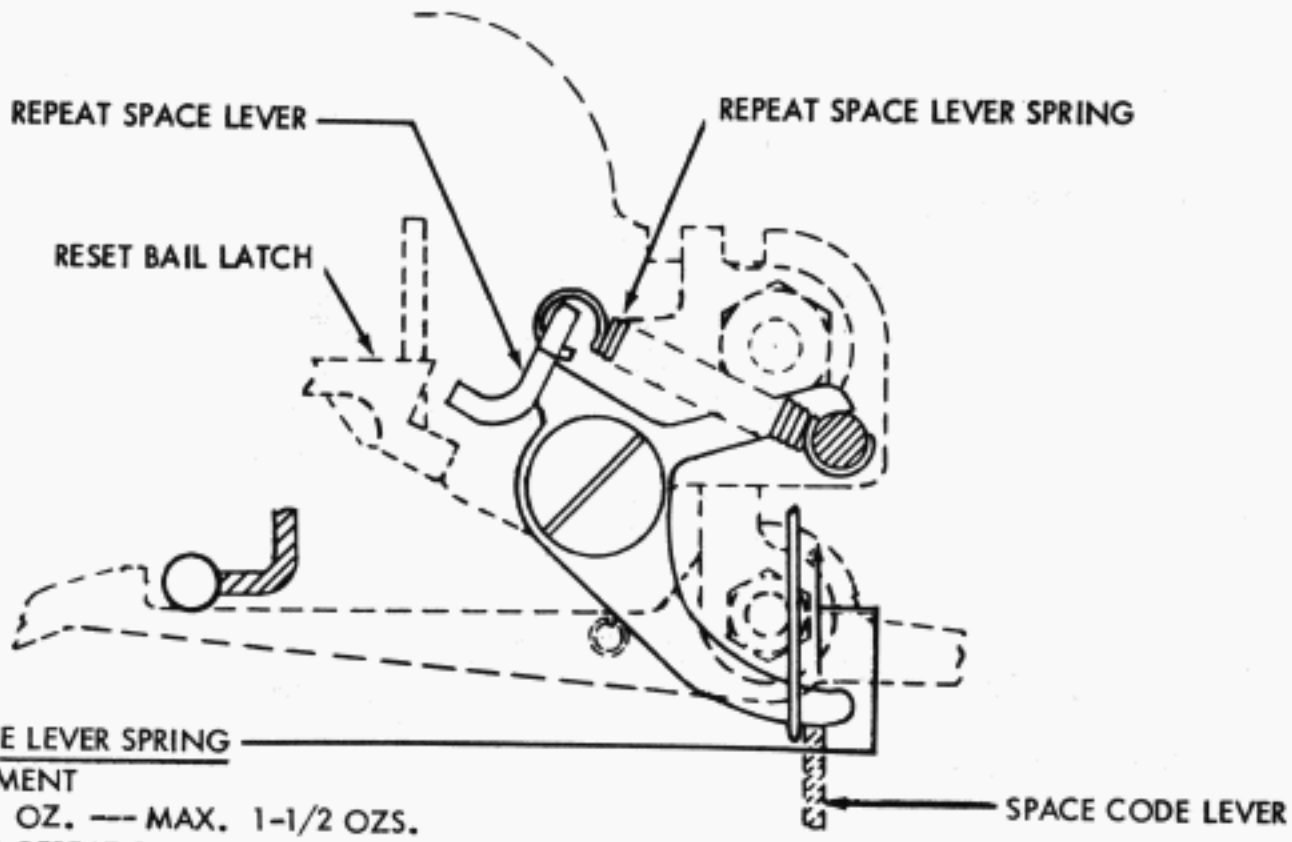

REPEAT SPACE LEVER SPRING

(1) REQUIREMENT

MIN. 1 OZ. --- MAX. 1-1/2 OZS.

TO PULL REPEAT SPACE LEVER IN ENGAGEMENT WITH RESET BAIL LATCH.

(2) REQUIREMENT

WITH POWER APPLIED AND THE SPACE BAR FULLY DEPRESSED, THE SPACE CHARACTER SHOULD BE REPEATED AS LONG AS THE SPACE BAR IS HELD DEPRESSED.

FIGURE 4-43A. KEYBOARD, REPEAT-ON-SPACE MECHANISM

ECCENTRIC FOLLOWER PAWL SPRING

REQUIREMENT

ECCENTRIC FOLLOWER PAWL IN EXTREME FORWARD POSITION. 8 OZ. SCALE APPLIED TO PAWL NEAR RATCHET WHEEL AND PULLED UPWARD

MIN. 1 1/2 OZS.

MAX. 4 OZS.

TO START PAWL MOVING.

TIME DELAY DISABLING DEVICE

REQUIREMENT

DISABLE THE TIME DELAY MECHANISM WHEN NOT REQUIRED

TO ADJUST

RAISE THE PILOT SCREW (LOCK NUT LOOSENED) AND ECCENTRIC FOLLOWER PAWL UNTIL THE PAWL CLEARS THE RATCHET WHEEL.

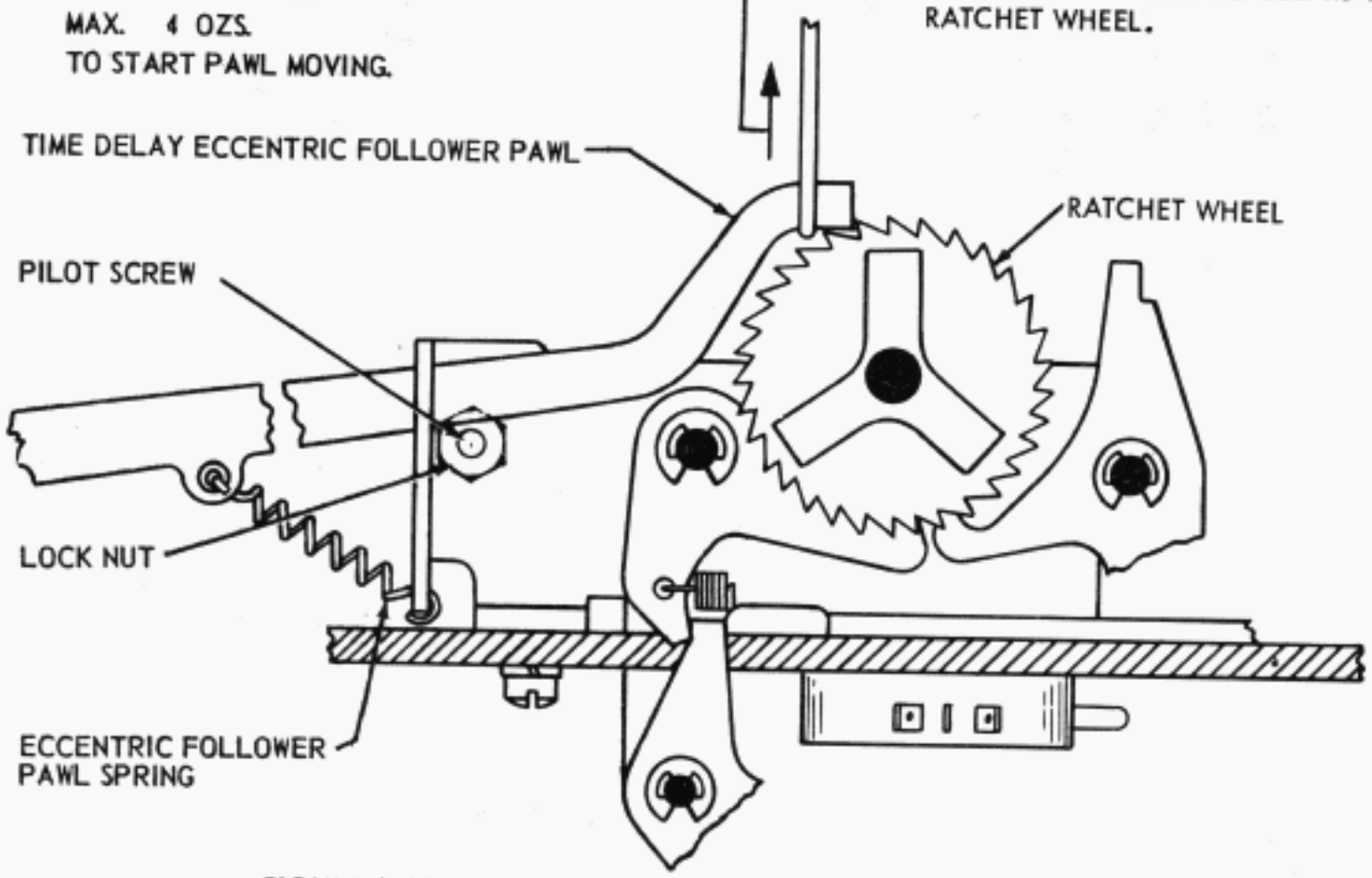

FIGURE 4-44. KEYBOARD OR BASE, TIME DELAY DISABLING MECHANISM

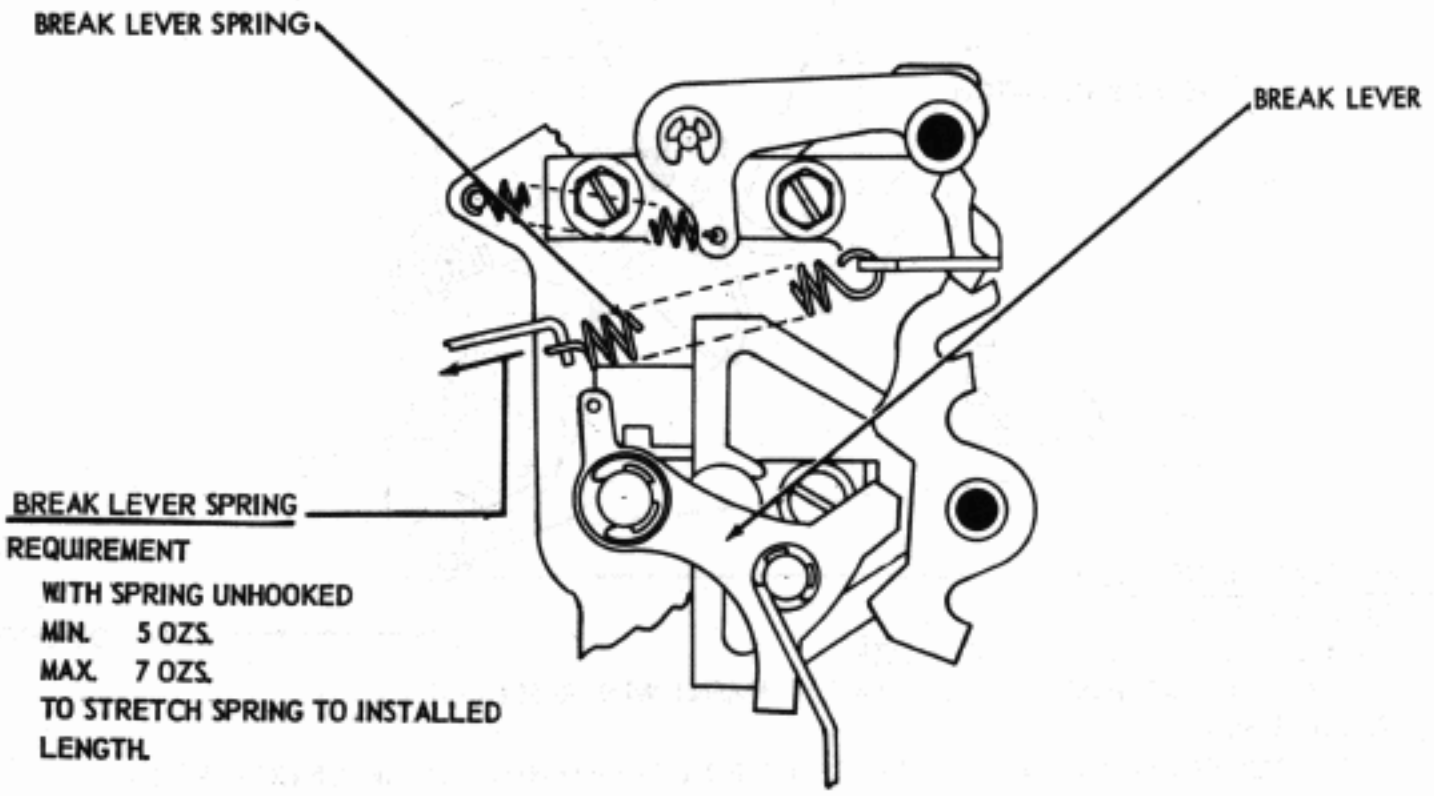

MECHANICAL
(REAR VIEW)

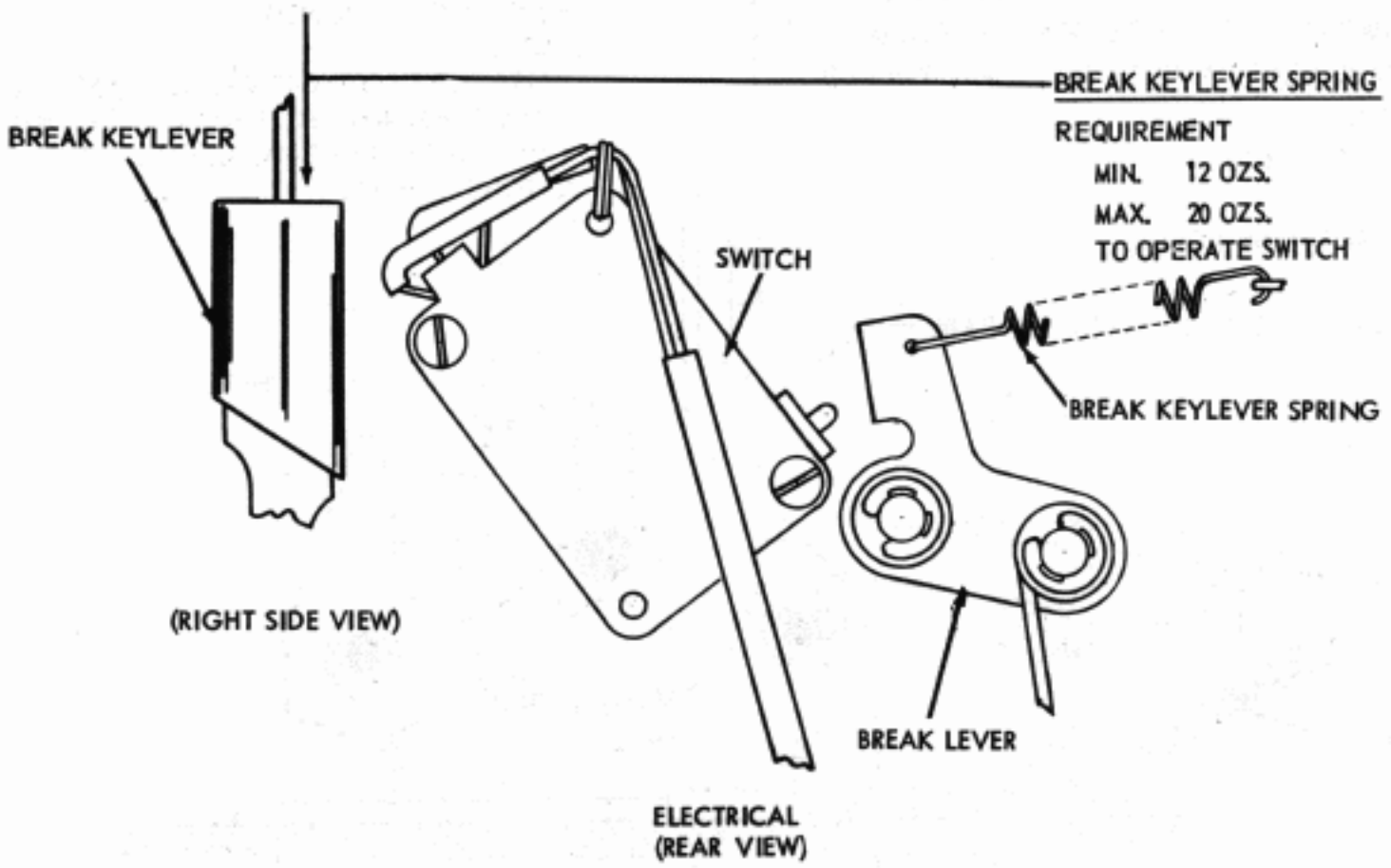

ELECTRICAL
(REAR VIEW)

FIGURE 4-45 KEYBOARD, SIGNAL LINE BREAK MECHANISMS

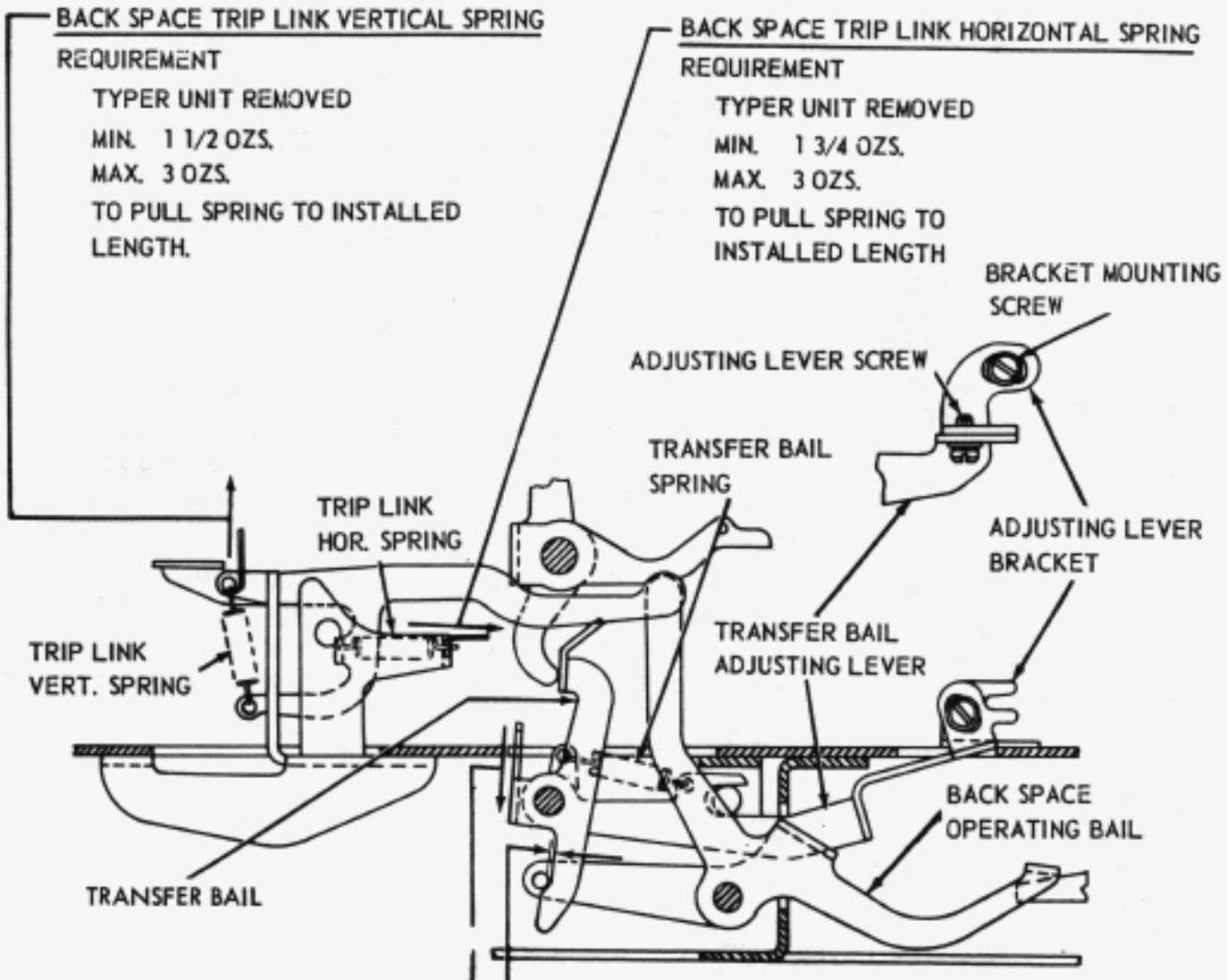

BACK SPACE TRANSFER BAIL SPRING

REQUIREMENT

MIN. 1/4 OZ.

MAX. 1 1/4 OZ.

TO START BAIL MOVING

NOTE

IN ORDER TO PUSH VERTICALLY DOWNWARD ON THE BAIL, THE ADJUSTING LEVER MAY HAVE TO BE MOVED TOWARD FRONT OF UNIT. REMAKE TRANSFER BAIL ADJUSTING LEVER HORIZONTAL ADJUSTMENT.

BACK SPACE TRANSFER BAIL ADJUSTING LEVER

REQUIREMENT (VERTICAL ADJUSTMENT)

WITH THE TYPER UNIT REMOVED, THERE SHOULD BE SOME CLEARANCE BETWEEN THE TRANSFER BAIL AND THE STUD ON THE BACK SPACE OPERATING BAIL.

MAX. 0.006 INCH

TO ADJUST

POSITION THE ADJUSTING LEVER BRACKET NEAR THE CENTER OF ITS ADJUSTING RANGE. POSITION THE ADJUSTING LEVER UP OR DOWN WITH ITS ADJUSTING LEVER SCREW FRICTION TIGHT TO MEET THE REQUIREMENT.

FIGURE 4-46 KEYBOARD, BACK SPACE MECHANISM

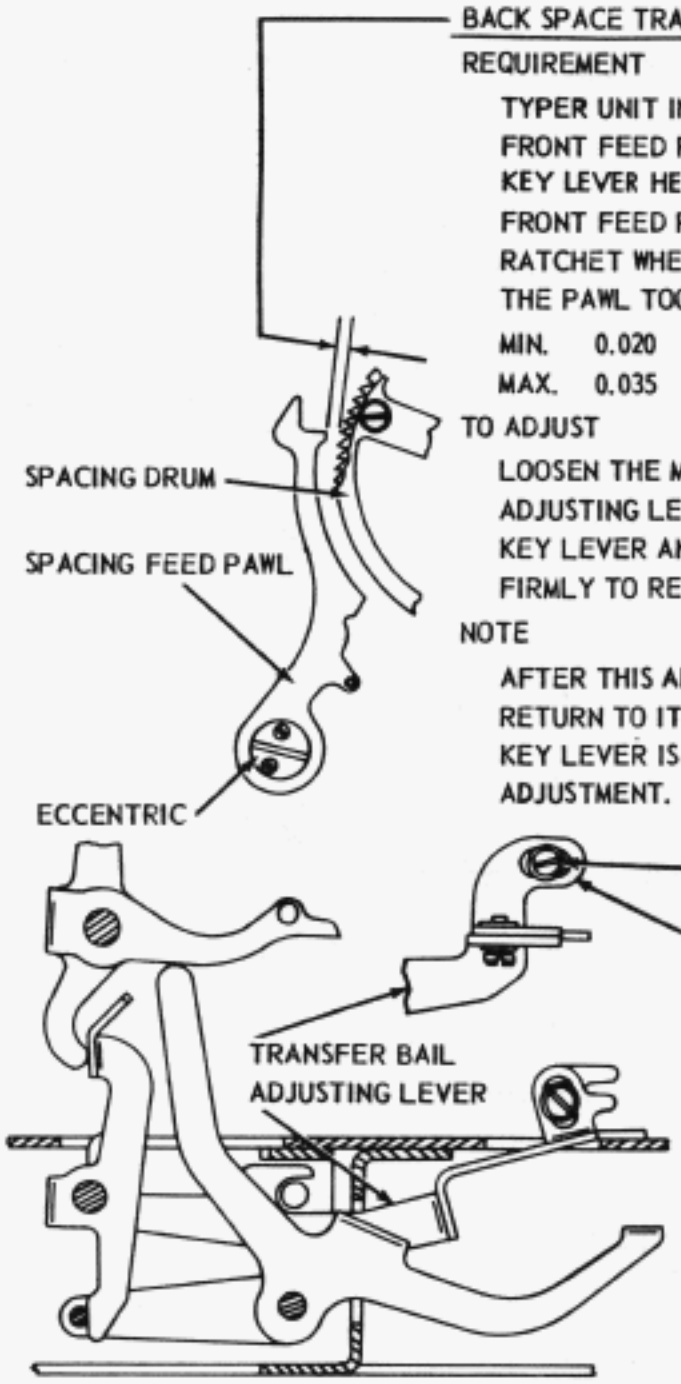

BACK SPACE TRANSFER BAIL ADJUSTING LEVER HORIZONTAL ADJUSTMENT

REQUIREMENT

TYPER UNIT INSTALLED, SPACING CLUTCH DISENGAGED, FRONT FEED PAWL IN LOWER POSITION. BACK SPACE KEY LEVER HELD DEPRESSED, MAIN SHAFT ROTATED UNTIL FRONT FEED PAWL IS OPPOSITE THE PEAK OF THE FIRST RATCHET WHEEL TOOTH THAT MOVES DOWNWARD PAST THE PAWL TOOTH. CLEARANCE SHOULD BE:

MIN. 0.020
MAX. 0.035

TO ADJUST

LOOSEN THE MOUNTING SCREW ON THE TRANSFER BAIL ADJUSTING LEVER BRACKET. DEPRESS THE BACK SPACE KEY LEVER AND PUSH THE ADJUSTING LEVER AND BRACKET FIRMLY TO REAR. TIGHTEN THE BRACKET MOUNTING SCREW.

NOTE

AFTER THIS ADJUSTMENT THE CAMMING BAIL SHOULD RETURN TO ITS UNOPERATED POSITION WHEN THE KEY LEVER IS RELEASED. IF IT DOES NOT RETURN REFINE THE ADJUSTMENT. RECHECK THE TRANSFER BAIL VERTICAL ADJUSTMENT

NOTE: IF A NEW TYPING UNIT IS INSTALLED ON THE BASE, THIS ADJUSTMENT SHOULD BE CHECKED.

FIGURE 4-47 KEYBOARD, BACKSPACING MECHANISM

(A)
OPERATING LEVER SLIDE ARM

NOTE

PRIOR TO THIS ADJUSTMENT CHECK FUNCTION RESET BAIL BLADE ADJUSTMENT (FIGURE 54)

REQUIREMENT

ON UNITS WITH TWO-STOP FUNCTION CLUTCHES. FUNCTION CLUTCH DISENGAGED. TYPE BOX CLUTCH ROTATED 1/2 REVOLUTION PAST STOP POSITION ON UNITS WITH ONE-STOP FUNCTION CLUTCH, ROTATE CLUTCH UNTIL FUNCTION PAWL STRIPPER BLADE IS IN ITS LOWER POSITION AND THE FUNCTION RESET BAIL ROLLER IS ON THE HIGH PART OF CAM. HORIZONTAL TABULATOR FUNCTION PAWL PULLED TO REAR AND LATCHED OVER FUNCTION BAR. CLEARANCE
MIN. 0.020 INCH
MAX. 0.030 INCH

TO ADJUST

POSITION SLIDE ARM ON OPERATING LEVER WITH MOUNTING STUD FRICTION TIGHT.

(C)
OPERATING LEVER EXTENSION LINK SPRING

REQUIREMENT

TRIP ARM LATCH BAIL SPRING UNHOOKED, OPERATING LEVER IN OPERATED POSITION. SLIDE ARM AGAINST BLOCKING LINK.
MIN. 8 3/4 OZS.
MAX. 10 3/4 OZS.
TO START LINK MOVING.

(B)
OPERATING LEVER ADJUSTING PLATE

REQUIREMENT

OPERATING LEVER IN UNOPERATED POSITION. CLEARANCE
MIN. 0.070 INCH
MAX. 0.085 INCH

TO ADJUST

POSITION ADJUSTING PLATE ONI BRACKET WITH MOUNTING SCREWS LOOSE.

(D) TABULATOR SHAFT SPRING (TORSION)

NOTE

FOR LOCATION OF SPRING SEE FIGURE 4-51

REQUIREMENT

OPERATING LEVER IN UNOPERATED POSITION.

AS IN LOWER FIGURE)
MIN. 1 1/2 OZS.
MAX. 3 1/2 OZS.
TO START SLIDE ARM MOVING.

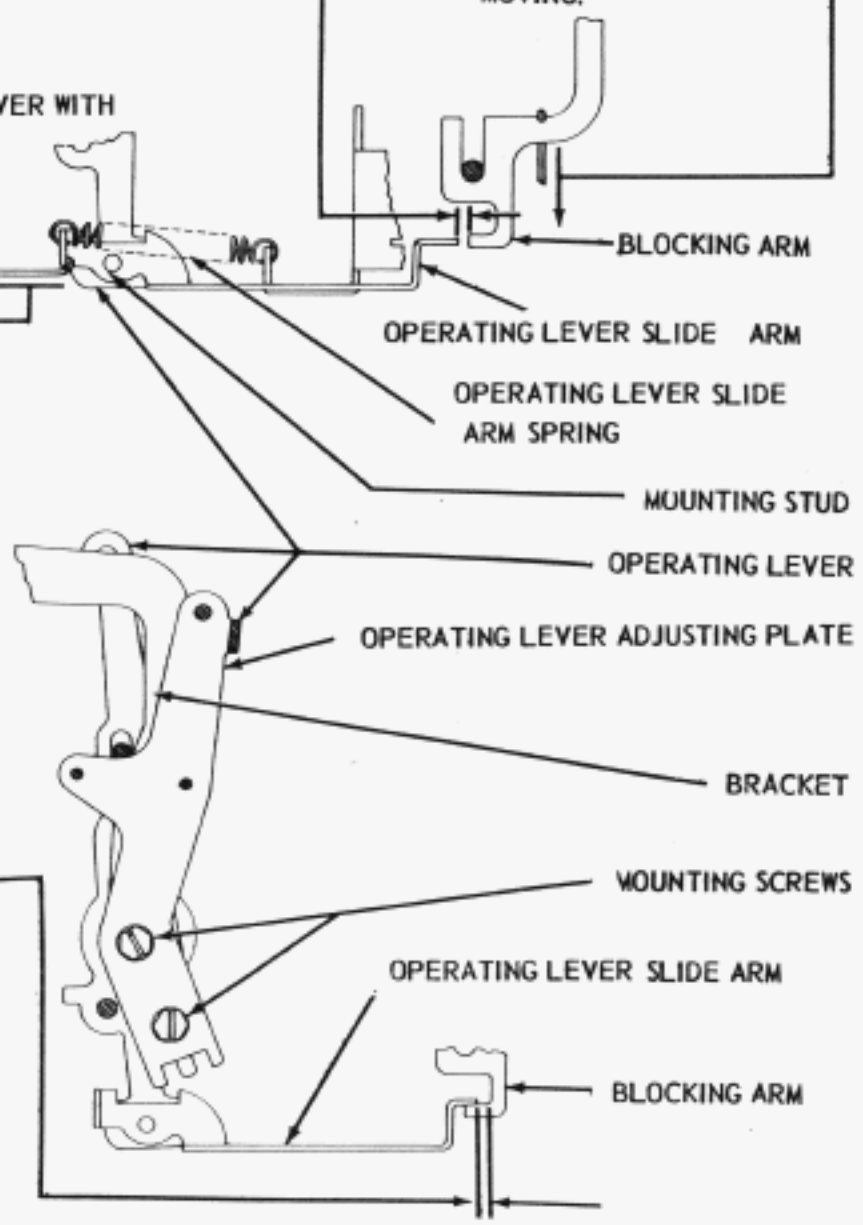

FIGURE 4-48 TYPING UNIT, HORIZONTAL TABULATOR MECHANISM (LEFT VIEW)

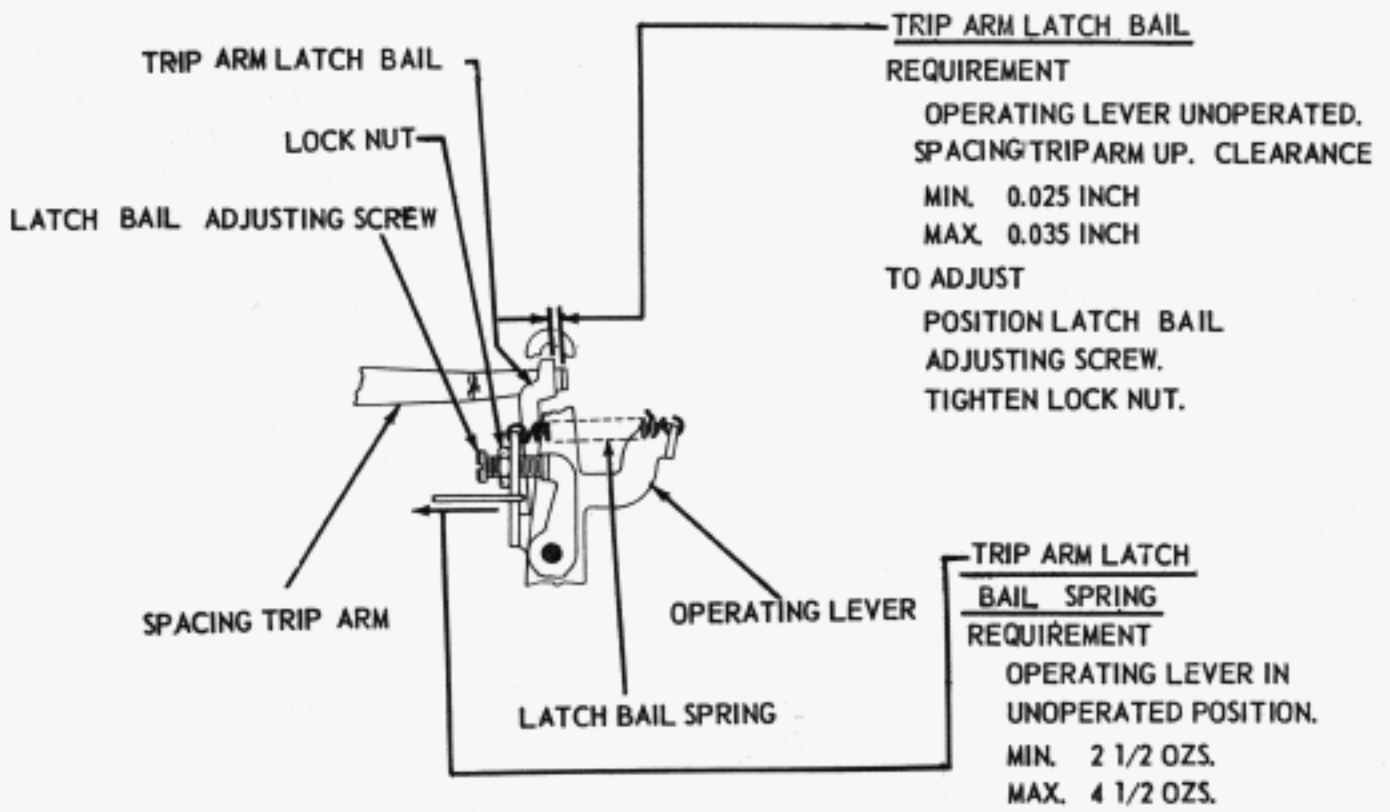

TRIP ARM LATCH BAIL

REQUIREMENT

OPERATING LEVER UNOPERATED. SPACING TRIP ARM UP. CLEARANCE

MIN. 0.025 INCH
MAX. 0.035 INCH

TO ADJUST

POSITION LATCH BAIL ADJUSTING SCREW.
TIGHTEN LOCK NUT.

TRIP ARM LATCH BAIL SPRING

REQUIREMENT

OPERATING LEVER IN UNOPERATED POSITION.

MIN. 2 1/2 OZS.
MAX. 4 1/2 OZS.

TO START LATCH BAIL MOVING

TRIP ARM LATCH BAIL ADJUSTING PLATE

REQUIREMENT

SPACING CLUTCH AND TYPE BOX CLUTCH DISENGAGED. OPERATING LEVER SLIDE ARM TO REAR AND LATCHED ON BLOCKING ARM. LATCH BAIL IN FULLY LATCHED POSITION. SPACING TRIP ARM DOWN AND BEARING UP AGAINST LATCHING SURFACE OF LATCH BAIL . CLEARANCE

MIN. SOME
MAX. 0.008 INCH

TO ADJUST

POSITION LATCH BAIL ADJUSTING PLATE WITH MOUNTING SCREW FRICTION TIGHT.

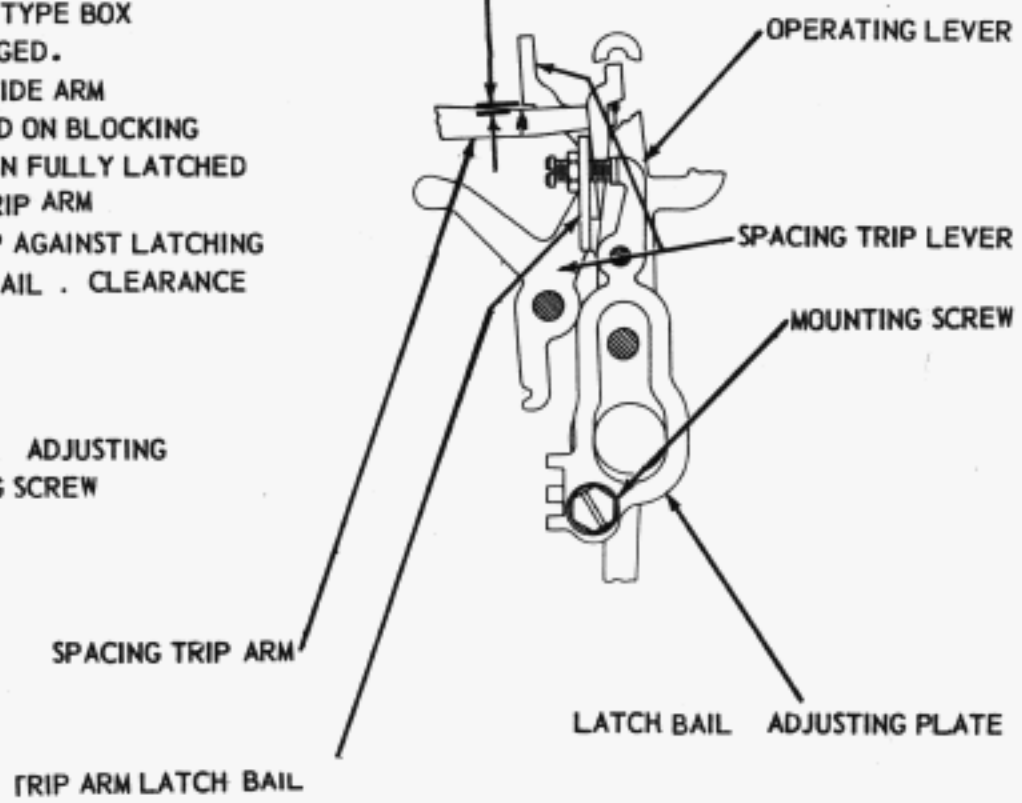

FIGURE 4-49 TYPING UNIT, HORIZONTAL TABULATOR MECHANISM. LEFT VIEW

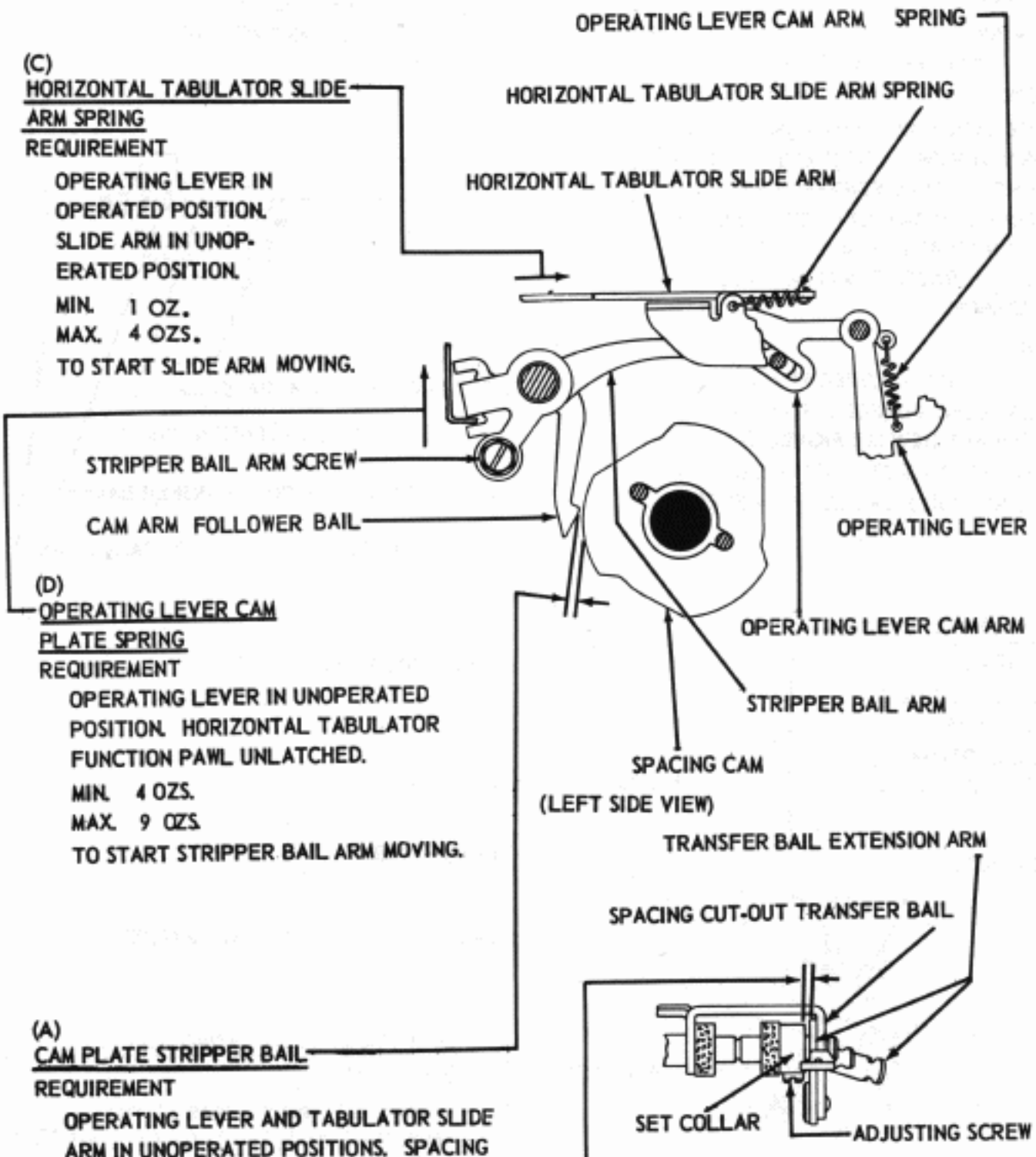

(C)
HORIZONTAL TABULATOR SLIDE ARM SPRING
REQUIREMENT
OPERATING LEVER IN OPERATED POSITION. SLIDE ARM IN UNOPERATED POSITION.
MIN. 1 OZ.
MAX. 4 OZS.
TO START SLIDE ARM MOVING.

(D)
OPERATING LEVER CAM PLATE SPRING
REQUIREMENT
OPERATING LEVER IN UNOPERATED POSITION. HORIZONTAL TABULATOR FUNCTION PAWL UNLATCHED.
MIN. 4 OZS.
MAX. 9 OZS.
TO START STRIPPER BAIL ARM MOVING.

(A)
CAM PLATE STRIPPER BAIL
REQUIREMENT
OPERATING LEVER AND TABULATOR SLIDE ARM IN UNOPERATED POSITIONS. SPACING CLUTCH ROTATED UNTIL HIGH PART OF SPACING CAM IS OPPOSITE CAM ARM FOLLOWER BAIL. CLEARANCE
MIN. 0.010 INCH
MAX. 0.025 INCH
TO ADJUST
POSITION STRIPPER BAIL ARM ON CAM ARM FOLLOWER BAIL WITH STRIPPER BAIL ARM SCREW FRICTION TIGHT.

(B)
SPACING CUT OUT TRANSFER BAIL SET COLLAR
REQUIREMENT
TRANSFER BAIL SHOULD HAVE SOME END PLAY.
MAX. 0.008 INCH.
TO ADJUST
POSITION SET COLLAR WITH ADJUSTING SCREW LOOSENED.

FIGURE 4-50 TYPING UNIT, HORIZONTAL TABULATOR MECHANISM

(A)

RIGHT MARGIN

REQUIREMENT

CLEARANCE

MIN. 0.006 INCH MAX. 0.025 INCH

TO CHECK

PLACE TYPE BOX IN POSITION TO PRINT CHARACTER ON WHICH SPACING CUTOUT IS DESIRED. PULL FORWARD ON PART OF TRANSFER BAIL EXTENDING BELOW MOUNTING SHAFT UNTIL BAIL IS IN FULLY OPERATED POSITION. GAGE CLEARANCE.

TO ADJUST

POSITION CUTOUT LEVER WITH CLAMP SCREW LOOSENED (FOR LOCATION OF CLAMP SCREW SEE FIGURE 4-32)

NOTE: FOUR SCREWS MUST BE LOOSENED TO ADJUST CIRCULAR CUTOUT LEVERS.

(B) SPACE SUPPRESSION BY-PASS SPRING

REQUIREMENT

MIN. 20 OZS.

MAX. 26 OZS.

TO START ARM MOVING.

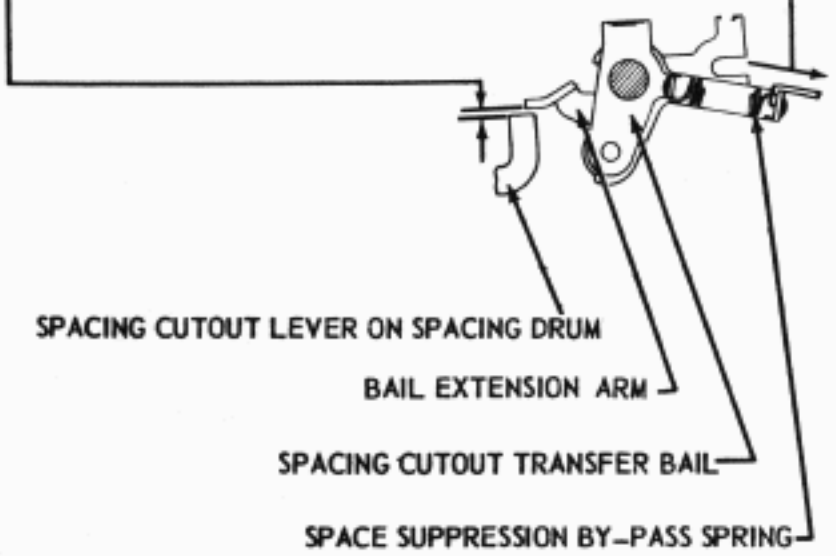

(RIGHT SIDE VIEW)

(D)

TABULATOR PAWL SPRING

REQUIREMENT

MIN. 1 3/4 OZS.

MAX. 3 OZS.

TO PULL SPRING TO INSTALLED LENGTH.

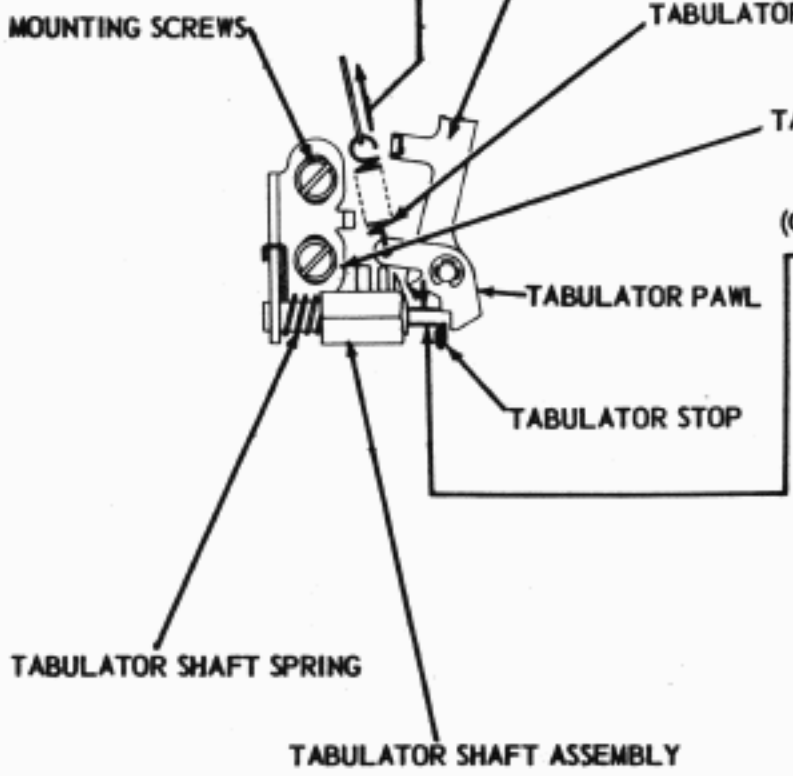

(C)

TABULATOR SHAFT MOUNTING BRACKETS

REQUIREMENT

LEVER SLIDE ARM TO REAR SO THAT BLOCKING ARM AND TABULATOR STOP ARE IN EXTREME UPPER POSITION. CLEARANCE

MIN. 0.050 INCH MAX. 0.065 INCH

CLEARANCE MEASURED NEAR LEFT AND RIGHT END OF SHAFT EQUAL WITHIN 0.007 INCH

TO ADJUST

POSITION MOUNTING BRACKETS WITH MOUNTING SCREWS LOOSENED.

NOTE: MAKE SURE SHAFT IS FREE OF BINDS.

FIGURE 4-51 TYPING UNIT HORIZONTAL TABULATOR MECHANISM

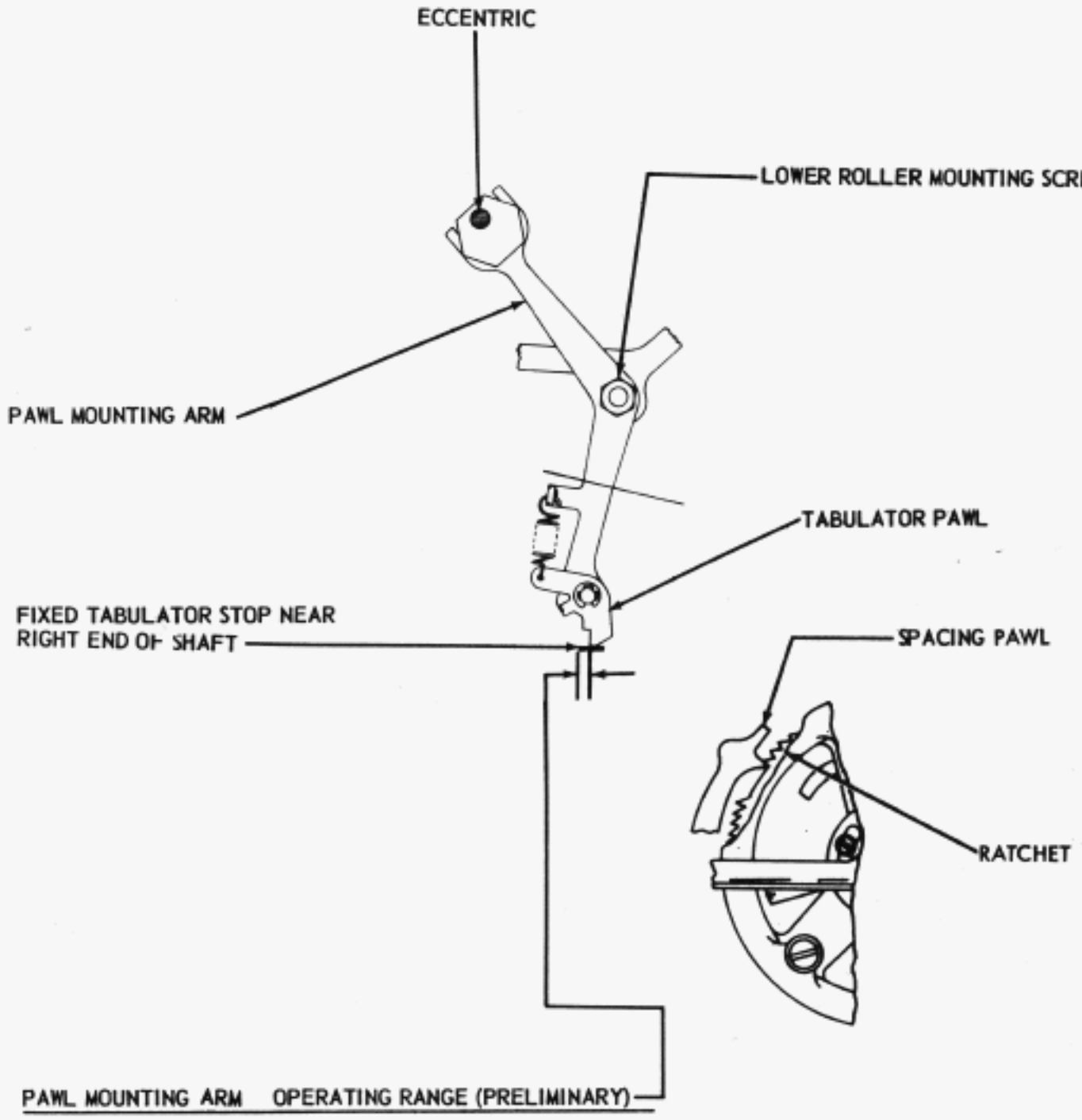

PAWL MOUNTING ARM OPERATING RANGE (PRELIMINARY)

NOTE - - - PRIOR TO THIS ADJUSTMENT, CHECK THE FOLLOWING: OSCILLATING RAIL SLIDE (FIGURE 51), PRINTING CARRIAGE POSITION (FIG. 1-57) AND PRINTING CARRIAGE LOWER ROLLER (FIG. 1-56).

REQUIREMENT (UNITS WITH FRICTION FEED PLATENS)

SPACING CLUTCH DISENGAGED. SPACING PAWL, WHICH IS FARTHEST ADVANCED, ENGAGING TOOTH IMMEDIATELY ABOVE CUTAWAY SECTION OF RATCHET. TABULATOR PAWL RIDING UP ON FIXED STOP. HIGH PART OF ECCENTRIC TOWARD FORK OF MOUNTING ARM. CLEARANCE

MIN. 0.070 INCH MAX. 0.090 INCH

REQUIREMENT (UNITS WITH SPROCKET FEED PLATENS)

HIGH PART OF ECCENTRIC TOWARD LOWER ROLLER MOUNTING SCREW.

TO ADJUST

POSITION ECCENTRIC.

FIGURE 4-52 TYPING UNIT, HORIZONTAL TABULATOR MECHANISM

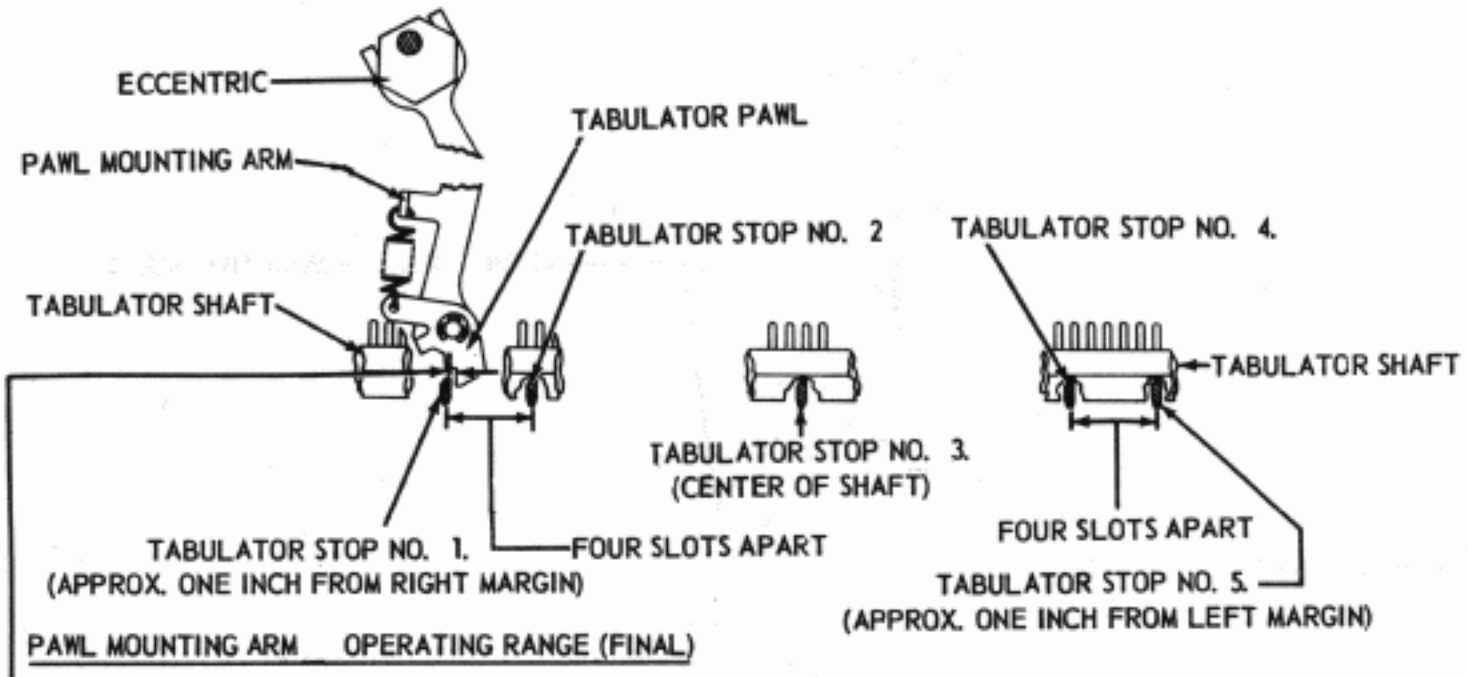

PAWL MOUNTING ARM OPERATING RANGE (FINAL)

REQUIREMENT

CLEARANCE MIDWAY BETWEEN MINIMUM AND MAXIMUM LIMITS OF OPERATING RANGE.

TO CHECK

TO DETERMINE MAXIMUM LIMIT. . . (A) SET FIVE TABULATOR STOPS AS SHOWN IN FIGURE. (B) POSITION PAWL IMMEDIATELY TO RIGHT OF STOP NO. 1. (C) POSITION ECCENTRIC TO SET CLEARANCE APPROXIMATELY 0.030 INCH. (NOTE - - - MEASURE ALL CLEARANCES AT STOP NO. 1. WITH PLAY TAKEN UP IN CARRIAGE TO REDUCE GAP TO MINIMUM.) (D) MARK COLUMN LOCATION BY PRINTING A CHARACTER ON PAPER. (E) POSITION PAWL IMMEDIATELY TO RIGHT OF STOP NO. 2 AND MARK COLUMN LOCATION AS IN STEP (D). (F) REPEAT STEP (E) FOR OTHER THREE STOPS. (G) GRADUALLY INCREASE CLEARANCE UNTIL CARRIAGE STOPS ONE SPACE BEFORE ANY COLUMN WHILE RECEIVING FIGURES G LETTERS X FROM TRANSMITTER DISTRIBUTOR. (NOTE - - - IF UNIT IS NOT EQUIPPED WITH XD CONTROL, PUT FILL-IN CHARACTERS OF LETTERS OR FIGURES IN TAPE TO DELAY PRINTING UNTIL CARRIAGE COMPLETES TRAVEL.) (H) DECREASE CLEARANCE UNTILTEN LINES OF TABULAR OPERATION CAN BE MADE WITHOUT ERROR.(1) GAGE AND RECORD VALUES OF CLEARANCE. (2) GAGE ALL CLEARANCES WITH FRONT FEED PAWL FARTHEST ADVANCED.

TO DETERMINE MINIMUM LIMITS - - - (A) REPEAT STEPS (B) AND (C) ABOVE. (B) GRADUALLY DECREASE CLEARANCE UNTIL CARRIAGE STOPS ONE SPACE AFTER ANY COLUMN. (C) INCREASE CLEARANCE UNTIL TEN LINES OF TABULAR OPERATION CAN BE MADE WITHOUT ERROR. (1) GAGE AND RECORD VALUE OF CLEARANCE.

TO ADJUST

IF MINIMUM LIMIT IS POSITIVE, ADD IT TO MAXIMUM LIMIT AND DIVIDE THE SUM BY TWO. SET RESULTANT AMOUNT AS MIDPOINT OF RANGE. IF MINIMUM LIMIT IS ZERO OR LESS, DIVIDE MAXIMUM LIMIT BY TWO AND SET THIS AMOUNT AS MIDPOINT OF RANGE. THE DIFFERENCES BETWEEN LIMITS NORMALLY IS NOT LESS THAN 0.045 INCH.

TABULATOR STOP SETTING (NOT ILLUSTRATED)

RIGHT MARGIN TABULATOR STOP (WITH WIDE SHELF)

NOTE: PRIOR TO THIS ADJUSTMENT, CHECK THE FOLLOWING: RIGHT MARGIN (FIGURE 4-51 AND PAWL MOUNTING ARM OPERATING RANGE (FIGURE 4-52 AND 4-53).

POSITION PRINTING CARRIAGE AT RIGHT MARGIN (SPACING CUTOUT OPERATED). INSERT STOP WITH WIDE SHELF IN SLOT IMMEDIATELY TO LEFT OF TABULATOR PAWL.

COLUMNAR TABULATOR STOPS

PLACE CARRIAGE IN POSITION TO PRINT FIRST CHARACTER IN COLUMN. INSERT STOP IN SLOT IMMEDIATELY TO LEFT OF TABULATOR PAWL. STORE EXTRA STOPS IN SLOTS BEYOND PRINTING LINE AT EITHER END OF SHAFT.

NOTE - - - WHEN PRINTING FORMS, CHECK STOP SETTINGS WITH RELATION TO COLUMNS, CORRESPONDING STOPS ON ALL MACHINES CONNECTED IN A CIRCUIT MUST BE THE SAME NUMBER OF SPACING OPERATIONS FROM LEFT MARGIN.

FIGURE 4-53 TYPING UNIT HORIZONTAL TABULATOR MECHANISM